Aug. 19, 1947. W. HAUSZ ET AL 2,426,021

PULSED OSCILLATOR

Filed Oct. 27, 1944

Fig. 1.

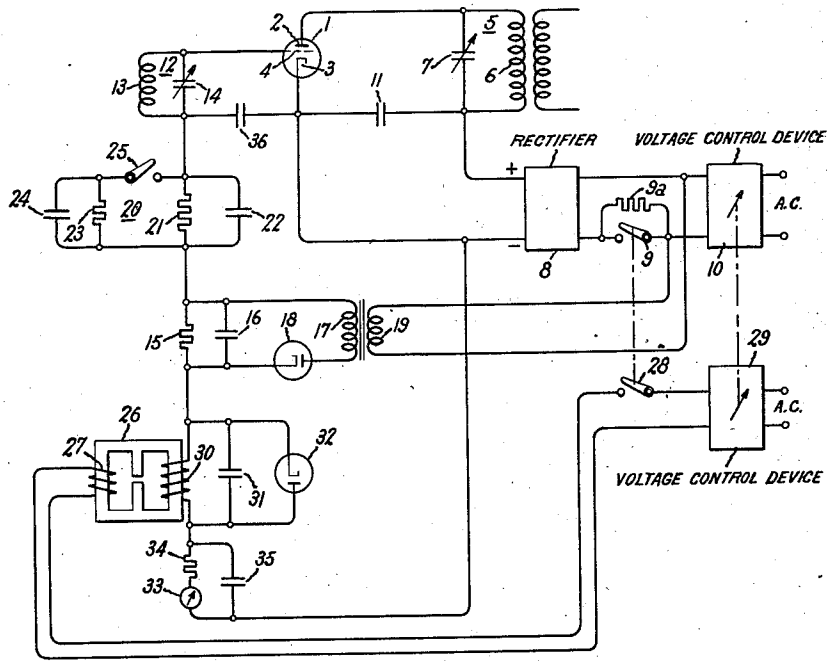

Fig. 2.

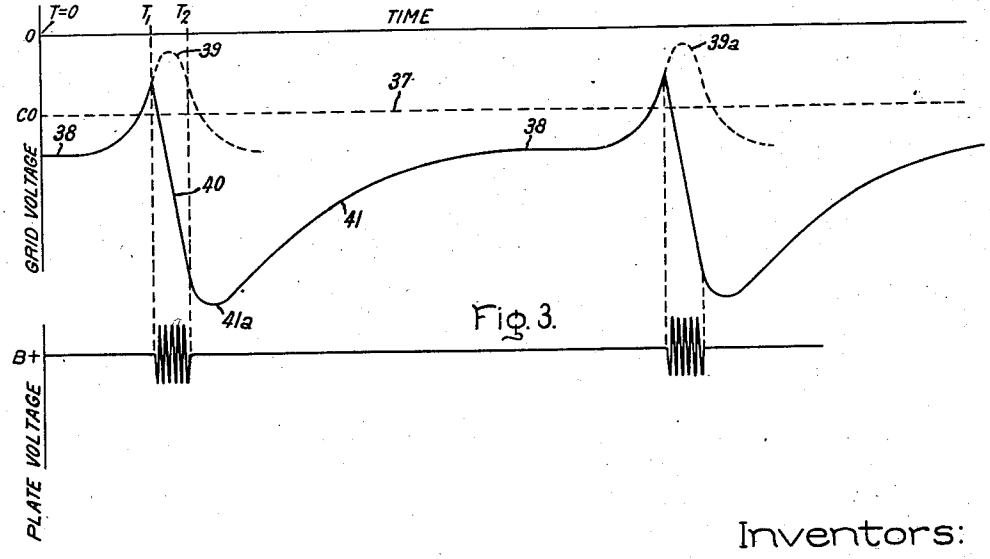

Fig. 3.

Inventors:
Walter Hausz,
Alfonso Alvira,
by Harry E. Dunham
Their Attorney.

Patented Aug. 19, 1947 2,426,021

UNITED STATES PATENT OFFICE

2,426,021

PULSED OSCILLATOR

Walter Hausz and Alfonso Alvira, Schenectady, N. Y., assignors to General Electric Company, a corporation of New York

Application October 27, 1944, Serial No. 560,541

5 Claims. (Cl. 250—36)

1

Our invention relates to electron discharge oscillators and, more particularly, to pulsed input circuits for such oscillators arranged to control the operation of the oscillator so that oscillations are generated in short, recurrent bursts or pulses.

It is a general object of our invention to provide new and improved pulsing means for an electron discharge oscillator.

It is a further object of our invention to provide a new and improved triggered input circuit for electron discharge oscillators.

It is still another object of our invention to provide an oscillator grid pulsing circuit characterized particularly by ease in starting and simplicity in keying operation.

Another object of our invention is the provision of new and novel triggering means for controlling the repetition rate of pulses of oscillations in a self-blocking oscillator.

Briefly, our invention comprises an electron discharge oscillator of the self-blocking type having an input circuit including means for normally biasing the grid beyond cutoff and means for recurrently supplying to the grid short pulses or surges of positive potential to initiate oscillations.

Our invention itself will be more fully understood and its objects and advantages further appreciated by referring now to the following detailed specification taken in conjunction with the accompanying drawing in which Fig. 1 is a schematic circuit diagram of a pulsed oscillator embodying our invention, and Figs. 2 and 3 are graphical representations of certain voltage relations characteristic of an oscillator embodying our invention.

Referring now to the drawing, and particularly to Fig. 1, we have shown an electron discharge oscillator comprising an electron discharge device 1 having an anode 2, a cathode 3, and a control electrode 4. By way of illustration only, we have shown the discharge device 1 connected as a tuned plate-tuned grid oscillator. It will of course be understood by those skilled in the art that our invention is not limited in its scope to application to an oscillator of this particular type, but may be applied equally well to oscillators of other well known types. The tuned-plate-tuned-grid oscillator shown comprises a tuned plate circuit 5 comprising an inductance 6 and a variable capacitor 7 connected in parallel circuit relation between the anode 2 and the positive terminal of a source of unidirectional potential such as a rectifier 8 connected to a suitable source of alternating current supply (not shown) through a

2

switch 9 and a voltage control device such as a variable voltage transformer 10. A by-pass condenser 11 connected across the rectifier 8 reduces to a negligible value the impedance offered by the rectifier to oscillatory currents. The negative terminal of the rectifier 8 is connected to the cathode 3. A resistor 9a connected across the switch 9 maintains constant output voltage on the rectifier 8 when the load is removed, thereby to facilitate easy starting.

The input or control electrode circuit of the discharge device 1 is connected between the control electrode 4 and the cathode 3, and includes a tuned circuit 12 comprising an inductance 13 and a variable capacitor 14. The circuit 12 is tuned to a frequency differing slightly from the frequency of the generated oscillations in such a sense that the tuned circuit 12 has the effect of an inductance in the input circuit. The input circuit also includes means interposed between the control electrode 4 and the cathode 3 for normally biasing the control electrode sufficiently negative to maintain the discharge device 1 cut off. Such biasing means comprises a resistor 15 and a condenser 16 connected in parallel circuit relation and across a source of unidirectional potential. The unidirectional biasing potential source comprises a transformer having a secondary winding 17 connected across the condenser 16 through a diode rectifier 18 and a primary winding 19 connected to the output terminals of the variable voltage transformer 10, or other suitable source of alternating current supply. Connection of both the plate supply rectifier 8 and the bias supply rectifier 18 to the same variable voltage source of alternating current, as to the transformer 10, ensures that the bias potential from rectifier 18 will vary directly with the plate or anode voltage. Since the tube cut-off voltage varies with plate voltage the interconnection of plate and bias voltage sources maintains the negative biasing potential across the condenser 16 substantially proportional to cut-off voltage.

The oscillator input circuit includes also a delay circuit 20 connected in series with the circuit 12 and the resistor 15 and comprising a resistor 21 and a condenser 22 connected in parallel circuit relation. The condenser 22 has a capacitance sufficient automatically to block oscillations in the discharge device 1 a predetermined time after initiation of such oscillations. The resistor 21 discharges the condenser 22 during the interval between pulses. In order to vary the duration of pulses of oscillations in the discharge device 1,

we have shown a parallel connected resistor 23 and condenser 24 which may, if desired, be connected in parallel with the resistor 21 and condenser 22 through a switch 25.

In order recurrently to initiate oscillations in the discharge device 1, we provide a source of periodic positive pulses connected in series circuit relation in the input circuit. This source comprises a saturable core peaking transformer 26 having a primary winding 27 connected through a switch 28 to a suitable source of variable voltage alternating current supply, such as a variable voltage transformer 29. The secondary winding 30 of the transformer 26 is connected in series circuit relation in the input circuit of the oscillator. Connected in parallel circuit relation with the transformer secondary winding 30, we provide also a condenser 31 and a quenching diode 32. The diode 32 is connected to short-circuit the winding 30 for negative voltages across the winding, so that such negative voltages are suppressed and do not appear upon the oscillator grid 4.

The control elements of the transformers 10 and 29 are interconnected so that their output voltages vary in intensity in like manner. By this interconnection operation of the oscillator over a wide range of anode voltage is rendered possible, since the intensity of grid triggering pulses is made proportional to the negative bias potential across the condenser 16. For example, as anode voltage increases so that the tube cut-off voltage is greater, the bias potential across condenser 16 increases proportionately and maintains the grid 4 farther below cut-off. To overcome this the transformer 29 increases the intensity of the triggering pulses applied to the input circuit through the transformer 26.

As will appear more fully hereinafter, the transformer 29 may be connected to an alternating current source of any frequency below a predetermined maximum frequency determined by the discharge time of the condenser 22. Preferably the switches 9 and 28 are also interconnected, so that when the switch 28 is opened to remove triggering pulses from the input circuit and remove the load on the rectifier 8 the resistance 9a is inserted in the rectifier input circuit to maintain the rectifier output voltage normal.

In the drawing we have shown an indicating instrument 33 and a resistor 34 connected in series in the input circuit of the oscillator 1 and shunted by a capacitor 35. It will of course be understood by those skilled in the art that the instrument 33 is included for indicating purposes only but may, if desired, be omitted.

A by-pass condenser 36 is connected to shunt all elements of the input circuit except the tuned circuit 12 for currents at oscillator frequency.

In view of the foregoing description of the circuit arrangement of our new and improved pulsing oscillator, the operation of the oscillator will now be understood from the following description.

In the absence of output voltage from the peaking transformer 26, the substantially constant charge maintained on the condenser 16 through the rectifier 18 is sufficient to maintain the control electrode 4 below cut-off, so that the discharge device 1 is non-conductive. The three-legged peaking transformer 26 having an air gap in the unwound center leg is of a construction well known to those skilled in the art. When a sine wave of voltage is impressed upon the primary winding 27 of such a transformer, the transformer leg upon which the secondary winding 30 is wound exhibits a flat-topped flux characteristic by reason of saturation of this leg. Accordingly, therefore, pulses of voltage are induced in the secondary winding only during the relatively short periods of reversal of flux through the secondary winding. These pulses are alternately positive and negative, each cycle of the alternating primary voltage supplying one positive and one negative pulse. The negative pulses are quenched in the discharge device 32 which is connected to short-circuit the transformer winding 30 for voltages of such polarity. The positive pulses, however, appear at the terminals of the winding 30 and raise the voltage of the control electrode 4 sufficiently to initiate oscillations in the discharge device 1.

At Fig. 2, we have shown a curve of grid bias voltage plotted against time wherein the foregoing relations appear. On this curve, the broken line 37 indicates the cut-off voltage of the control electrode 4. At the time $T=0$, the control electrode is biased below cut-off to a negative voltage 38 by the action of the rectifier 18 and condenser 16. The positive voltage pulses impressed on the input circuit by the peaking transformer 26 are indicated in broken lines at 39 and 39a. These pulses are shown on an exaggerated time scale to illustrate more clearly the operation of the circuit. As indicated at Fig. 2, the net grid voltage shown in the unbroken line increases from 38 to a value above cut-off upon the appearance of the pulse 39. At some point slightly above cut-off, as at a time T_1, the discharge device 1 becomes conductive. This is indicated at Fig. 3, which shows the variation of anode voltage with time.

After initiation of oscillations in the discharge device 1, the oscillations build up rapidly by reason of the interelectrode capacitive coupling between the anode 2 and the control electrode 4. As the anode potential oscillates due to energy storage in the tuned circuit 5, the grid potential also oscillates in opposite phase relation by reason of the capacitive anode-to-grid coupling through the interelectrode capacitance and the effectively inductive grid-to-cathode coupling through the tuned circuit 12. The oscillations of grid potential take place around the instantaneous grid bias potential shown by the solid curve at Fig. 2. As the grid oscillations build up, they soon reach a point where the instantaneous net grid potential exceeds the cathode potential once per cycle of the oscillations. Whenever the grid 4 is positive, it draws grid current, thereby to charge the condensers 22, 16, 31 and 35, in such a direction as to bias the grid negative with respect to the cathode. The capacitance of the condenser 22, or the combined capacitance of the condensers 22 and 24 if the switch 25 is closed, is such that the grid is driven rapidly negative by grid current, as indicated by the line 40 at Fig. 2. The rate at which the grid bias voltage increases in a negative sense due to grid current is of course affected by the condensers 16, 31 and 35, but these condensers are so chosen that their effect is small compared to the effect of the condensers 22 and 24. Since the grid oscillations take place about the instantaneous grid bias potential shown in full lines at Fig. 2, it is evident that the grid is soon biased so negative that the grid oscillations fail to attain even the cut-off potential. At this point, as at a time T_2, the discharge device 1 is automatically blocked by the action of its own input circuit, and oscillations cease.

When the oscillations in the discharge device 1 cease at the time T_2, the grid 4 is left with a

large negative potential. It will be noted that at such time the positive pulse 39 has not yet passed, so that the net instantaneous grid voltage following the time T_2 will be the resultant of the latter portion of the pulse 39, the negative bias voltage 38 across the resistor 15, and the voltage of the condenser 22 as it discharges through the resistor 21. As the negative charge on the condenser 22 decays and the pulse 39 passes, the resultant instantaneous potential of the control electrode 4 follows a curve such as indicated at 41*a*, 41 of Fig. 2. The portion 41 of the grid voltage curve is the resultant of discharge of the condenser 22 and the last portion of the pulse 39. The portion 41 of the grid voltage curve shows the effect of condenser discharge alone after passage of the pulse 39. The condenser 22 is almost completely discharged and the grid voltage restored to the normal bias valve 38 prior to the occurrence of the next positive pulse 39*a* from the transformer 26.

The function of the capacitors 16, 31 and 35 will now be clear. These capacitors are connected across the resistor 15, the transformer winding 30 and the instrument 33, respectively, in order to conduct the large grid current which flows during blocking operation, as in the time interval T_1—T_2 at Fig. 2. The grid current would otherwise cause very large voltages across the shunted elements and preclude pulse type oscillation. It may now be noted also that the connection of the capacitor 31 across the winding 30 forms a resonant circuit which tends to oscillate at its natural frequency after each triggering pulse across the transformer winding 30. The quenching diode 32 serves to suppress such oscillations, as well as to suppress negative induced pulses as hereinbefore described.

It will now be noted that the duration of the output pulses from the oscillator tube 1 is determined by the time taken for grid current in the tube 1 to drive the control electrode sufficiently negative to block the oscillations. This time is indicated at Fig. 2 as the time interval T_1—T_2, and is determined by the magnitude of grid current and capacitance of the condenser 22, taken in connection with the total capacitance of the other condensers in the input circuit. Moreover, the time between output pulses, that is, the frequency or repetition rate of the pulses, is determined by the frequency of the alternating current source connected to the peaking transformer 26 through the transformer 29. The maximum permissible repetition rate is limited, however, by the rate of discharge of the condenser 22 through the resistor 21, since the triggering pulses, 39, 39*a* from the transformer 26 must be spaced apart in time by at least the time taken for the condenser 22 to discharge sufficiently to allow the triggering pulse to take effect. This discharge time is controlled by the resistor 21. It is for the purpose of controlling the duration and maximum frequency of the pulses that we provide the additional R. C. circuit 23, 24 which may, if desired, be connected in parallel circuit relation with the circuit 21, 22 by means of the switch 25.

While we have described only a preferred embodiment of our invention by way of illustration, many modifications will occur to those skilled in the art and we therefore wish to have it understood that we intend in the appended claims to cover all such modifications as fall within the true spirit and scope of our invention.

What we claim as new and desire to secure by Letters Patent of the United States is:

1. In combination, a self-pulsing oscillator including an electron discharge device having an anode, a cathode and a control electrode, input and output circuits connected to said device and coupled to support oscillations, said input circuit being connected between said cathode and control electrode, means for supplying to said control electrode a negative biasing potential sufficient normally to maintain said discharge device non-conductive, means comprising a source of alternate positive and negative potential pulses connected in series in said input circuit for impressing pulses on said control electrode, each of said positive pulses having sufficient intensity to overcome said biasing potential and initiate said oscillations, and a second electron discharge device connected across said source to suppress said negative pulses therefrom, whereby only said positive pulses are effective in said input circuit.

2. In combination, a self-pulsing oscillator including an electron discharge device having an anode, a cathode and a control electrode, input and output circuits connected to said device and coupled to support oscillations, said input circuit being connected between said control electrode and cathode, means for supplying to said control electrode a negative biasing potential sufficient normally to maintain said discharge device non-conductive, means comprising a peaking transformer having a secondary winding connected in said input circuit for periodically impressing alternate positive and negative voltage peaks thereon, and a second electron discharge device connected in parallel circuit relation with said secondary winding to suppress negative voltage peaks across said winding, each of said periodic positive pulses from said transformer having sufficient amplitude to overcome said biasing potential and initiate oscillations in said first discharge device.

3. In combination, a self-blocking oscillator including an electron discharge device having an anode, a cathode, and a control electrode, input and output circuits connected to said device and coupled to support oscillations, said input circuit being connected between said control electrode and cathode, means for supplying to said input circuit a negative bias potential sufficient normally to maintain said discharge device non-conductive, a peaking transformer having a secondary winding connected in said input circuit and a primary winding connected to a source of alternating current thereby periodically to induce in said secondary winding alternate positive and negative potential pulses, means comprising a condenser connected in parallel circuit with said secondary winding for by-passing grid current of said oscillator, and a second electron discharge device connected in parallel circuit relation with said secondary winding to suppress negative pulses across said secondary winding and to quench oscillations across said condenser following said positive pulses, whereby said positive pulses periodically initiate oscillations in said first discharge device.

4. In combination, a self-pulsing oscillator comprising an electron discharge device having an anode, a cathode, and a control electrode, input and output circuits connected to said discharge device and regeneratively coupled to support oscillations, said input circuit being connected between said control electrode and cathode and including means for effecting grid current blocking of said oscillator, means for biasing said control electrode sufficiently negative normally

to prevent said oscillations, means including an inductive element connected in series circuit relation in said input circuit for supplying recurrent pulses of positive potential to said control electrode, a condenser connected in parallel circuit relation with said inductive element to conduct said grid current, and a second electron discharge device connected in parallel circuit relation with said inductive element to suppress oscillations in said inductive element following said positive pulses.

5. In combination, a self-pulsing oscillator comprising an electron discharge device having an anode, a cathode, and a control electrode, input and output circuits connected to said discharge device and regeneratively coupled to support oscillations, said control electrode circuit being connected between said control electrode and cathode and including means for effecting grid current blocking of said oscillator, means for biasing said control electrode sufficiently negative normally to prevent said oscillations, a saturable core transformer having a secondary winding connected in series circuit relation in said input circuit and a primary winding connected to a source of alternating current, a quenching diode connected across said secondary

winding to suppress negative pulses across said secondary winding, and a condenser connected in parallel circuit relation with said secondary winding to conduct said grid current, said diode suppressing oscillations tending to arise across said transformer and condenser following positive pulses from said transformer.

WALTER HAUSZ.
ALFONSO ALVIRA.

REFERENCES CITED

The following references are of record in the file of this patent:

UNITED STATES PATENTS

Number	Name	Date
2,218,549	Philpott	Oct. 22, 1940
2,225,046	Hunter	Dec. 17, 1940
2,272,998	Bjornson	Feb. 10, 1942
2,270,773	Sonnentag et al.	Jan. 20, 1942
1,919,985	Patterson	July 25, 1933
2,297,742	Campbell	Oct. 6, 1942
2,355,606	Shannon	Aug. 15, 1944

FOREIGN PATENTS

Number	Country	Date
108,640	Australia	Sept. 22, 1939