Nov. 22, 1955 M. J. CARPINELLA 2,724,161

SNAP FASTENER SOCKET

Filed April 21, 1952

Fig. 1

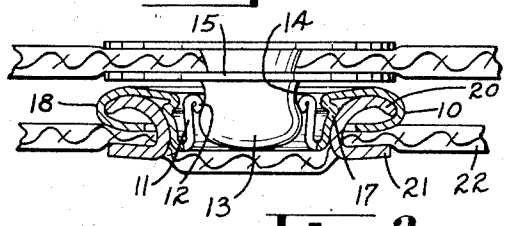

Fig. 2

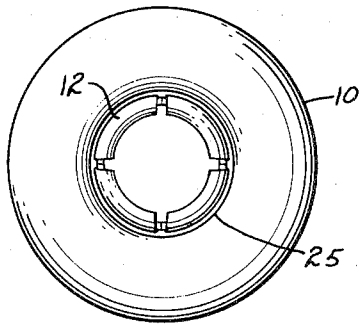

Fig. 3

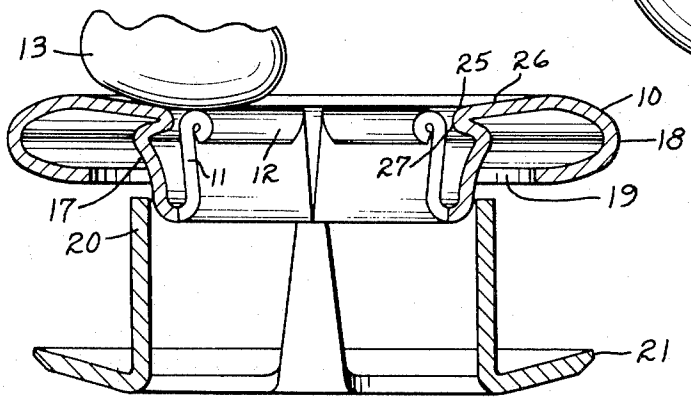

Fig. 4

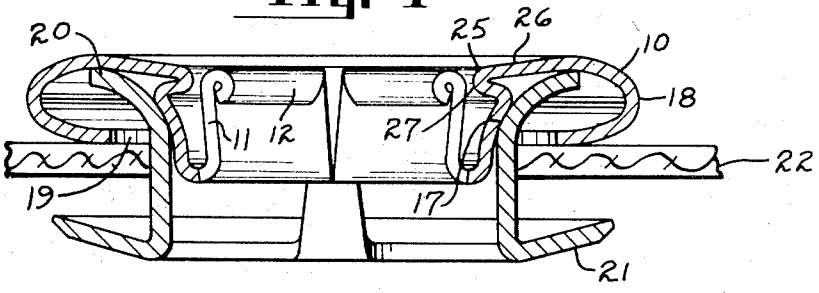

INVENTOR

Michael J. Carpinella

BY

H. F. Johnston

ATTORNEY

United States Patent Office 2,724,161 Patented Nov. 22, 1955

2,724,161

SNAP FASTENER SOCKET

Michael J. Carpinella, Waterbury, Conn., assignor to Scovill Manufacturing Company, Waterbury, Conn., a corporation of Connecticut

Application April 21, 1952, Serial No. 283,338

1 Claim. (Cl. 24—216)

This invention relates to snap fasteners and more particularly to an improved socket member for snap fasteners.

During recent years there have come into wide use on launderable articles snap fasteners having a socket member as disclosed in the patent to Fenton, No. 2,106,728, February 1, 1938. While such fasteners have been generally satisfactory they have sometimes failed in use because the spring fingers would become distorted laterally or inwardly. This might happen when a strong side pull is applied to the assembled stud and socket members, or if a heavy pressure is put on the stud part when engaged between the fingers and the breast portion of the member.

Some attempts have been made to correct this situation by adding an extra cap member over the socket which itself would take the lateral stress. However, such attempts have not been altogether successful and furthermore they involve an additional part with consequent expense and bulkiness.

The object of my invention is to provide a backing-up of the fingers to prevent their being distorted by lateral stresses and at the same time eliminate the danger of the stud being pushed between the fingers and the breast portion. These purposes are accomplished furthermore without the addition of extra parts and without increasing the bulk or materially increasing the cost of manufacturing.

Socket members of this type are attached to an article of clothing or the like by means of a prong ring, the prongs of which penetrate the clothing and are curled over inside the breast portion. This means that the breast portion should have its inner or anvil wall sloping or curving outwardly and upwardly in a substantially continuous surface so as to insure that the prongs will curl properly inside the breast portion. This has necessitated that the anvil wall be spaced a considerable distance from the free ends of the spring fingers.

According to my invention portions of the anvil wall itself are struck inwardly to provide a backing up means for the spring fingers without interfering with the substantially continuous anvil surface on the inner side of the anvil wall. This is preferably done by making a close double fold or what might also be described as an S-shaped fold of the material of the anvil wall in the vicinity of the free ends of the spring fingers. This not only backs up the fingers against lateral distortion but substantially closes the space between the fingers and the breast portion so that the stud head cannot enter between them.

The foregoing as well as other objects and various features of the invention will be more apparent from a consideration of the following description and accompanying drawing, in which,

Fig. 1 is a sectional view of a snap fastener installation constructed in accordance with the invention and showing a conventional stud assembled thereto.

Fig. 2 is a plan view of the socket member, per se.

Fig. 3 is a sectional view of the socket member and the attaching prong ring in unassembled position showing the parts on a larger scale, and

Fig. 4 is a view similar to Fig. 3 showing the attaching prong ring partially assembled to support fabric and the socket member.

Referring to the drawing and first considering Fig. 1, the numeral **10** designates generally a socket member comprising a central circular series of resilient fingers **11** disposed generally parallel to the axis of the assembly and having inwardly directed rolled beads **12** at their free forward ends which are adapted to cooperate with the head **13** and the contracted neck **14** of a stud member **15**. An anvil or breast portion **17** is joined to the inner end of the resilient fingers **11** and flares forwardly and outwardly from the rear ends of the fingers and terminates in an annular clinching ring **18** of U shape in cross section. The free edge of the clinching ring **18** is spaced from the inner part of the breast portion to provide an annular opening **19** through which the prongs **20** of an attaching ring **21** may be inserted in the act of assembling the socket member **10** to a support fabric **22**.

In order to back up the free ends of the fingers **11** against any severe lateral strains such as might occur when the stud member **15** is assembled to the socket member **10** and the supporting fabrics carrying the stud and socket members respectively are subjected to lateral opposing forces, I provide a rib portion **25** formed outwardly from an intermediate section of the breast portion **17**. This rib **25** results from a double or S-shaped fold of metal providing an inner rounded end **27** disposed in relatively close relationship to the free ends of the resilient fingers **11**. The relationship of the rib **25** to the fingers should be such as to allow about .004"–.005" clearance therebetween which is sufficient to allow the fingers to freely snap over the head **13** of the stud member **15** and yet prevent the fingers from being stretched beyond their elastic limits.

As specifically shown in Figs. 3 and 4 the upper surface of said breast portion is somewhat flattened and shaped into a conical surface **26** disposed at a relatively small acute angle to the upper plane of the socket member and which conical surface if extended inwardly would be substantially tangent to the upper surface of the beaded ends of the fingers **11**. The S-shaped fold does not materially affect the long inclined wall extending from the innermost or leading end of the breast portion **17** to the U-shaped interior of the clinching ring **18** thus assuring that the prongs **20** will be well directed outwardly before they reach the conic surface **26** in the process of assembling the prong ring and socket member to a support. The value of this long outward slope of the anvil portion can be best observed in Fig. 4 showing how the prongs are guided outwardly before reaching the clinching ring **18**.

Another important advantage of the invention is the prevention of the head of a stud from wedging in back of the fingers **11** such as might happen in the laundering of a garment. As best shown in Fig. 3 the conic surface **26** is disposed high enough relative to the tip ends of the fingers so as to guide the stud head over the top of the fingers in case one should accidentally line up with any part of the conic surface. Also the rib **25** is so dimensioned as to substantially close up the gap in back of the fingers and prevent the stud head from wedging therewithin.

This invention is not intended to be limited to the structure herein disclosed for the purposes of illustration but should be regarded as including modifications and variations thereof within the scope of the combined claim.

I claim:

A laundry-proof snap fastener installation of the type

having a socket member adapted for snap engagement with a stud member of circular cross section, which socket member is attachable to sheet-like supporting material by means of a prong ring insertable through the material into engagement with said socket member; said socket member comprising a single piece of sheet metal shaped to provide a plurality of resilient fingers arranged around a central stud receiving opening, the free ends of said fingers being turned radially inwardly to form stud-gripping beads, and a breast portion surrounding said fingers and having its inner lower edge integrally joined to said fingers, said breast portion extending from its inner lower edge in an upward and outward slope and being bent inwardly to provide a continuous rib at its intermediate portion surrounding the beaded ends of said fingers sufficiently close to prevent outward distortion of said fingers beyond their elastic limits, the inwardly bent portion resulting in an interruption in the upward and outward slope of said breast portion providing two distinct anvil surfaces separated by said interruption, the first anvil surface being

relatively steep upwardly and outwardly, and the second anvil surface still sloping upwardly and outwardly but approaching closer to the horizontal plane, said first anvil surface being so sloped and of such length as to cause the prongs of the prong ring to be deflected so as to pass said interruption and strike the second anvil surface with sufficient angularity to effect further outward distortion of said prongs without danger of piercing through said second anvil portion.

References Cited in the file of this patent

UNITED STATES PATENTS

878,550	Mead	Feb. 11, 1908
1,948,321	Upham	Feb. 20, 1934
2,080,379	Reiter	May 11, 1937
2,106,728	Fenton	Feb. 1, 1938
2,125,125	Reiter	July 26, 1938
2,402,628	Huelster	June 25, 1946