V. A. REILLY.

PLOW.

APPLICATION FILED APR. 22, 1916.

1,262,563.

Patented Apr. 9, 1918.

2 SHEETS—SHEET 1.

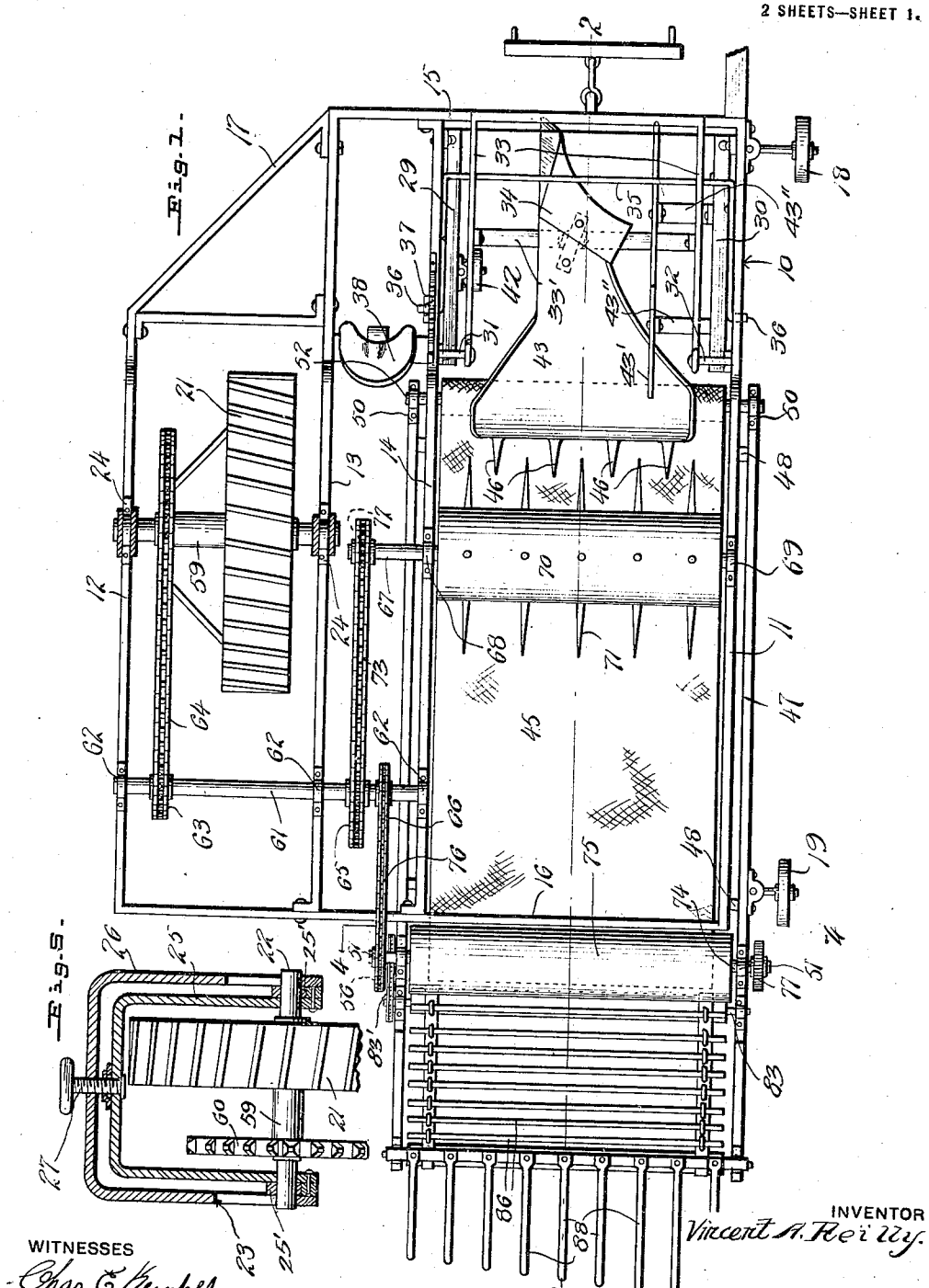

WITNESSES

Chas. E. Kemper.

Wm. E. Balk Jr.

INVENTOR

Vincent A. Reilly.

BY Richard Edwen.

ATTORNEY

V. A. REILLY.

PLOW.

APPLICATION FILED APR. 22, 1916.

1,262,563.

Patented Apr. 9, 1918.

2 SHEETS—SHEET 2.

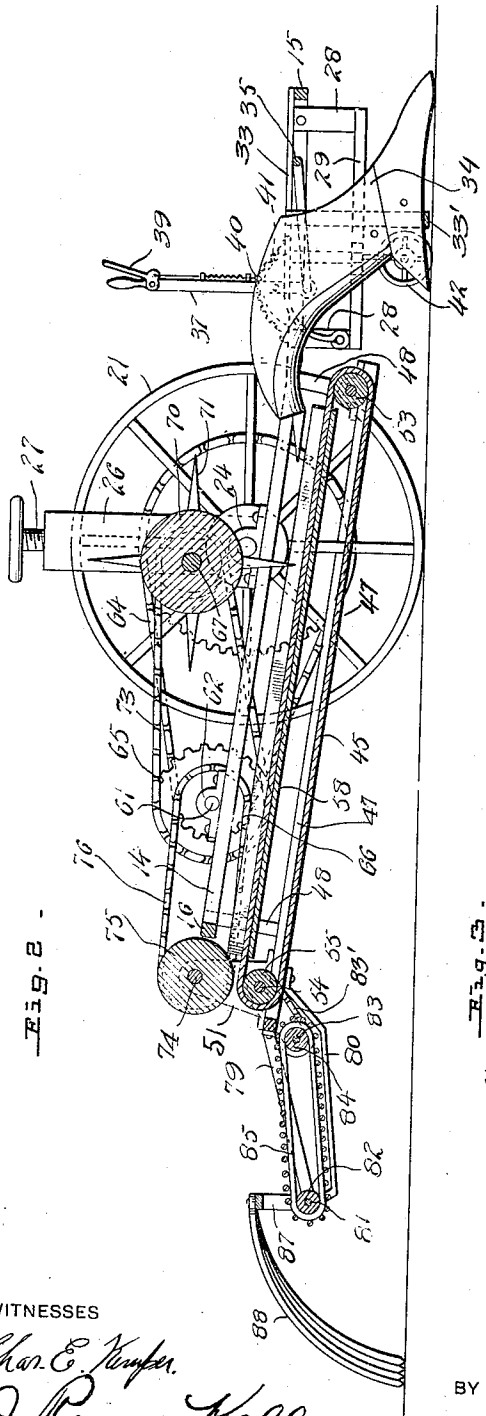

Fig. 2.

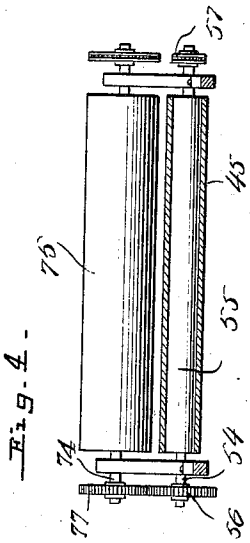

Fig. 4.

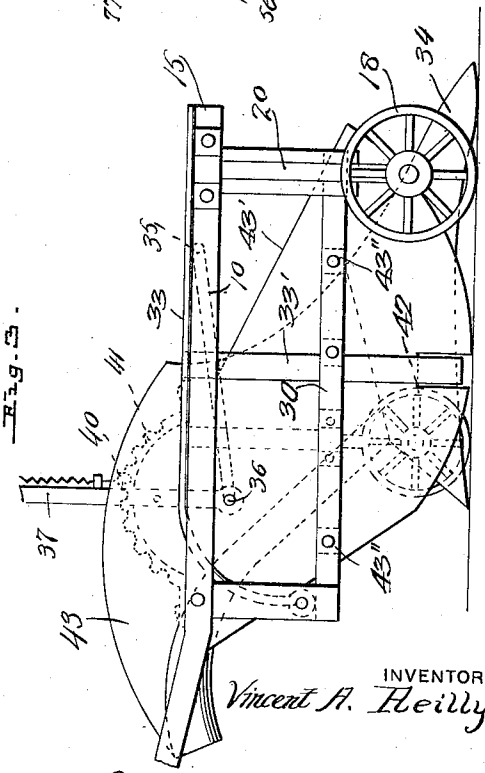

Fig. 3.

WITNESSES

Chas. E. Kimpel.

J. Reaney Kelly

INVENTOR

Vincent A. Reilly.

BY

Richard Owen.

ATTORNEY

UNITED STATES PATENT OFFICE.

VINCENT A. REILLY, OF TESSIER, SASKATCHEWAN, CANADA.

PLOW.

1,262,563. Specification of Letters Patent. Patented Apr. 9, 1918.

Application filed April 22, 1916. Serial No. 93,019.

To all whom it may concern:

Be it known that I, VINCENT A. REILLY, a citizen of the United States, residing at Tessier, in the Province of Saskatchewan and Dominion of Canada, have invented certain new and useful Improvements in Plows, of which the following is a specification.

This invention relates to improvements in plows, and more particularly contemplates the provision of a novel agricultural implement, which, aside from performing the function of the usual plow, includes means to act upon the earth, after it has been plowed, to first, thoroughly disintegrate the lumps and separate the earth from the grass and roots, secondly to deliver the earth back into the furrow, and thirdly convey the grass, roots, etc., to one side of the furrow.

A further object of my invention is to provide a device of the type in question that is extremely simple in construction, strong and durable, and highly practical from both the standpoint of the manufacturer and the standpoint of the user, and which, it is believed can be manufactured at a comparatively low cost.

These objects are accomplished by such means as are shown in their preferred form in the accompanying drawings, described in the following specification, and then more specifically pointed out in the appended claim.

In the accompanying drawings wherein like characters designate like parts throughout the several views:—

Figure 1 is a view in top plan showing my invention, as in its preferred embodiment.

Fig. 2 is a view in longitudinal sectional taken on line 2—2 of Fig. 1.

Fig. 3 is a view in side elevation, and on an enlarged scale, of the forward portion of the plow structure.

Fig. 4 is a view in section taken on the line 4—4 of Fig. 1, and

Fig. 5 is a fragmentary view of a portion of the frame work of the device showing more clearly the means for adjusting the frame.

In the present embodiment, 10 designates the main or supporting frame structure of the device in its entirety, the same consisting, more specifically, of side members 11 and 12, having interposed therebetween spaced supporting bars 13 and 14, while all of the elements are connected at their ends through the instrumentality of end members, 15, 16 and 17 respectively. While I do not wish to limit myself, as to the specific materials used in the construction of this frame, it is pointed out that the same is preferably formed of metallic bars or strips of suitable durability and of a material such as will add somewhat to the weight and thereby increase the traction power of the machine. The frame is supported at one side by means of idler wheels 18 and 19 that are carried upon members 20, and at its opposite side by means of the traction wheel 21 which is carried upon an axle 22 of the frame work 23; one part of the latter being fixedly connected with the members 12 and 13 of the body frame, as designated at 24.

Frame 23, above referred to, consists, preferably, of a pair of substantially U-shaped brackets 25 and 26 positioned one within the other, as clearly shown in Fig. 5, the axle 22 extending through openings to fit the same in the terminals of the bracket 25 and into bearing blocks 25′, and into vertical slots formed in the terminals of the brackets 26, the end portion of the brackets 26 being suitably connected with the frame members 12 and 13, while their intermediate lengths are connected by means of an adjusting screw 27 which is swiveled in the bracket 25 and threadedly engaged in the bracket 26, as also shown in the above mentioned figure. Thus it will be seen, by properly manipulating the screw 27, that relative movement of the brackets may take place to raise and lower the main frame relative to the ground.

Adjacent the forward end of members 11 and 14 of the main frame, I position spaced, depending arms 28, the arms of each member being connected by means of supporting bars 29 and 30. Adjacent the rear one of the arms 28, I position inwardly directed studs 31 and 32 which pivotally support a substantially U-shaped plow carrying frame 33. A depending inverted U-shaped bracket 33′ is provided having its terminal supported from the said frame 33 and its intermediate portion extended beneath the plow structure supporting the same. The frame 33, as above intimated, carries the plow structure 34 and by reason of the fact that its outer end portion

normally rests upon the end member 15 of the frame, it will be recognized that the plow is disposed, as in Fig. 1, when in its normal position.

With a view to properly operating the plow 34 and to provide means whereby the operator may raise or lower the same, at his option, I provide a second frame 35, preferably U-shaped when viewed in plan, which has its ends or trunnion portions 36 journaled in the side members 11 and 14 of the main frame and its intermediate lengths passed beneath the plow carrying frame 33. An operating lever 37 is fixed to the frame 35 in proximity to the operator's seat 38 and carries a pivoted link 39 for operating the pawl 40 which engages with the segmental rack 41 of the frame member 14. Consequently by properly manipulating the lever 37 the plow member may be raised or lowered at the discretion of the operator, and, at the same time, securely retained in any adjusted position, by reason of the engagement of the pawl 40 with the segmental rack 41.

I also find it advisable to mount an idler wheel, commonly called a furrow wheel 42, on one of the supporting bars 29 (see Fig. 1) thereby not only adding to the support of the intermediate portion of the main frame but also providing means to properly guide the plow, during operation.

Upon reference to Fig. 1, it will be noted that the mold board of the plow 34 is extended rearwardly and upwardly, to form a delivering sheath 43, the said sheath being superimposed with respect to the conveyer apron 45 that is disposed beneath the rear portion of the main frame 10 of the machine and which operates longitudinally with respect thereto. At its rearward edge, the sheath 43 is provided with a series of equidistantly spaced prongs or teeth 46 which serve to break up, to some extent, the clods of earth passing onto the apron 45 and which also coöperate with other prongs such as will be subsequently set forth. To prevent the earth from falling to the right of the plow, I provide a shield 43′ which is mounted upon brackets 43″ supported by the bar 30 so as to dispose said shields in a vertical plane to the right of the plow.

Another frame 47 is carried beneath the rear portion of the main frame 10 by means of depending brackets 48, and carries at one end, alined bearings 50 and at its other end larger upstanding bearings 51. A shaft 52 is journaled through bearings 50, of the subsidiary frame 47 and carries a roll 53 for supporting one end of the apron 45. A second shaft 54 connects bearings 51, adjacent to their lower ends, and also carries a roller 55 for supporting the other end of the apron. As will be noted upon reference to Fig. 4, shaft 54 serves as a drive shaft, it being equipped with a gear wheel 56 and a sprocket wheel 57 at its ends. The apron 45 being endless, will convey the material it receives from the sheath 43 to the rear end of the frames, and in order to support the upper lengths of the apron and to prevent sagging thereof due to the added weight of material, I provide a supporting sheet 58 which fits beneath the upper length of the apron, as clearly shown in Fig. 2 and is preferably formed of metal or other durable material.

The traction wheel 21, above referred to, carries a sleeve 59 which is in turn provided with a fixed sprocket wheel 60 as clearly shown in Fig. 5. A stub shaft 61 is journaled through brackets 62 on the frame members 14, 12 and 13, and carries a sprocket wheel 63 in alinement with the sprocket wheel 60 just referred to. Sprocket member 64 connects these sprocket wheels, to drive the shaft 61 and shaft 61 is provided with driving sprockets 65 and 66 which serves the purpose subsequently appearing.

Another shaft 67 is journaled through bearings 68 and 69 of the frame members 11 and 14, the same being spaced approximately intermediate the ends of the apron 45, and the shaft carries a drum 70 equipped with a series of radiating prongs or fingers 71 which, during operation move in close proximity to the upper lengths of the apron 45 and between the prongs 46 of the sheath 43. The sprocket wheel 72 on the shaft 67 is driven by means of a sprocket chain 73 from the drive sprockets 65 of shaft 61, and thus it will be seen that movement of the traction wheel 21 is imparted to the drum 70.

Adjacent their rear ends, the frame member 40 has a carrying shaft 74 which has its end portions journaled in the bearings 51 above referred to, the shaft carrying a pressure roll 75 that lies in close proximity to the rearward end of the upper length of the apron 45. Consequently, it will be seen that the material passing to the rear of the machine passes between the rollers 55 and 75 whereby all clods of dirt will be broken. Shaft 74 is driven by means of a sprocket chain 76 from the drive sprocket 65 of shaft 51 so that its movement is uniform with the drum 70 above referred to.

The opposite end of shaft 74 is also provided with a gear wheel 77 which drives the gear wheel 56 of shaft 54. Thus it will be seen that the apron 45 will also be actuated so as to convey the material to the rear of the machine and at a speed consistent with the speed of rotation of both the drum 70 and the pressure roller 75.

Upper and lower supporting brackets 79 and 80 are secured to the rear end of the subsidiary frame 47 and project rearwardly thereof to support at their rear ends, a shaft

81 that carries an operating roller 82. The lower bracket 80 carries upstanding alined bearings which are connected by means of a shaft 83, the latter also carrying an operating roller 84. A sprocket wheel 83′ is mounted upon said shaft 83 whereby to drive the shaft by means of an endless chain 83″ which passes over said sprocket wheel and the above mentioned sprocket wheel 57 of the shaft 54. Endless carriers 85 operate about the rollers 82 and 84 and are connected by means of spaced slats or connecting members 86. This last mentioned conveyer is arranged rearwardly of and slightly beneath the apron 45 so as to receive the material therefrom after the latter has passed beneath the pressure roll 75, and by reason of the spaced relation of the slats 86 it will be seen that the majority of the earth will fall through the last conveyer back into the furrow. The end portions of brackets 79 and 80 also carry an upstanding frame 87 which has mounted thereon a series of rearwardly directed arcuately curved teeth or fingers 88 which being of uniformly varying lengths serve to convey the grass, roots and other material delivered from the last conveyer to the side of the furrow. The particular arrangement of the fingers or teeth 88 insures the delivery of the debris to the side of the furrow without attention on the part of the operator.

The operation of my invention is substantially as follows:—

The earth passing upwardly upon the sheath 43 of the mold board of the plow is deposited on the forward end of the apron 45 and drawn beneath the drum 70 and the prongs thereof, at which time a majority of the grass, roots and other material is torn from the clods of earth. The material is then conveyed rearwardly by means of the apron and in passing beneath the roller 75, the clods are sufficiently broken up so that they fall between the slats 86 of the last conveyer and back into the furrow. The grass, roots and other material, on the other hand, are conveyed rearwardly by the last conveyer and when acted upon by the curved fingers or teeth 88 will be moved to the side of the furrow as is obvious.

From the foregoing it will be seen that the traction wheel 21 serves to drive the entire operating mechanism of the machine and that all of the operating parts move at a uniform speed. Since the advantages and novel features of my invention are apparent from the foregoing, it is believed that further detail description is unnecessary.

In reducing my invention to practice, I find that the form referred to herein as the most practical and preferred embodiment is the most efficient, but realizing that certain conditions will necessarily vary in concurrence with the adoption of my device, I desire to emphasize the fact that various minor changes in the details of construction and in the proportion of parts may be resorted to when required without sacrificing any of the advantages of my invention, as defined in the appended claim.

Having thus fully described my invention, what I claim as new and desire to secure by Letters Patent is:—

In a plowing machine, a supporting frame structure, means to support said frame structure, a plow movably mounted adjacent the forward end of said frame structure, a traveling apron positioned in the rear of said plow to receive the earth therefrom, pulverizing means operating above said apron to act upon the earth carried by the apron, a pressure roll operating above said apron, conveyer mechanism to receive the material from the apron, said conveyer mechanism comprising an open structure to permit the earth to fall back into the furrow, and a rake mounted in the rear of said conveyer mechanism to move the material delivered from the conveyer mechanism to the side of the furrow.

In testimony whereof I affix my signature in presence of two witnesses.

VINCENT A. REILLY.

Witnesses:
ROBT. M. KINE,
W. R. HOWEY.

Copies of this patent may be obtained for five cents each, by addressing the "Commissioner of Patents, Washington, D. C."