E. J. BRYAN.

COIL FORMING MACHINE.

APPLICATION FILED SEPT. 19, 1916.

1,253,782. Patented Jan. 15, 1918.

Fig. 1.

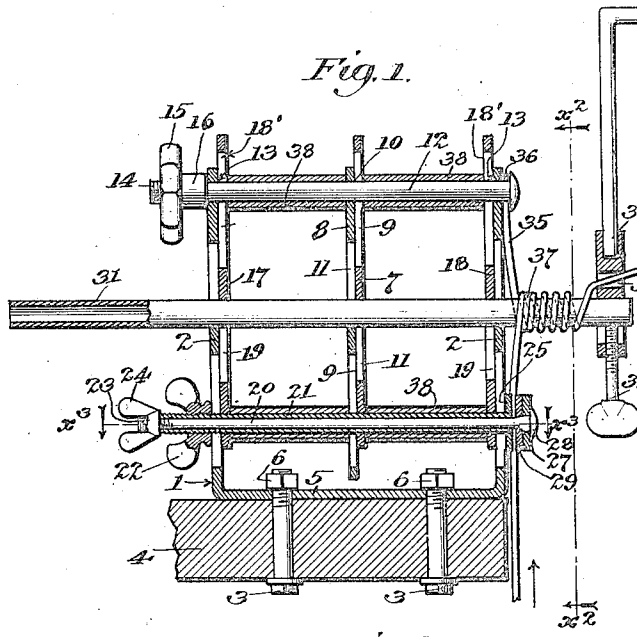

Fig. 7.

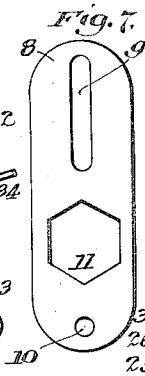

Fig. 2.

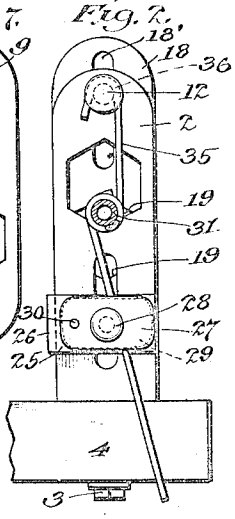

Fig. 3.

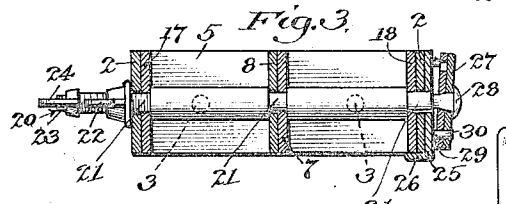

Fig. 8.

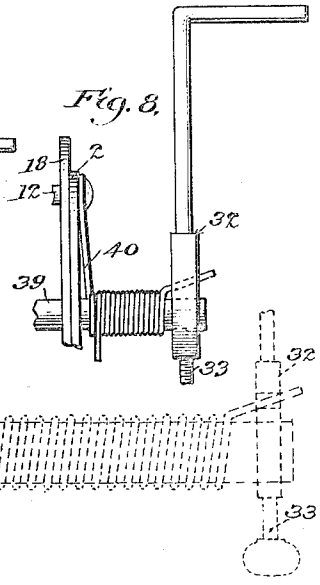

Fig. 4.

Fig. 5.

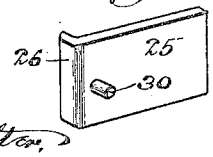

Fig. 6.

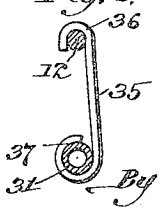

Witnesses:

Lulu A. Alter.

Sully Russo.

Inventor.

Edgar J. Bryan.

By Frederick S. Bryan.

Attorney.

UNITED STATES PATENT OFFICE.

EDGAR J. BRYAN, OF RIVERSIDE, CALIFORNIA.

COIL-FORMING MACHINE.

1,253,782. Specification of Letters Patent. Patented Jan. 15, 1918.

Application filed September 19, 1916. Serial No. 121,020.

To all whom it may concern:

Be it known that I, EDGAR J. BRYAN, a citizen of the United States, residing at Riverside, in the county of Riverside and State of California, have invented a new and useful Coil-Forming Machine, of which the following is a specification.

This invention has for its primary object to provide a machine for forming coils, particularly coil springs, which is simple in construction, comparatively small, and inexpensive to manufacture.

Another object of the invention is to provide a machine of the character described which will form coils of various lengths and diameters.

A further object of the invention is to provide a machine of the character described which may be easily operated, it being possible to quickly change the parts of the machine to provide for the making of coils of varying lengths and diameters, and with the coils suitably spaced.

In the drawings:—

Figure 1 is a vertical sectional view taken through the machine, showing it attached to a work bench or like support.

Fig. 2 is a vertical sectional view taken on the line x^2—x^2, Fig. 1.

Fig. 3 is a horizontal sectional view taken on line x^3—x^3, Fig. 1.

Fig. 4 is a side elevation of part of the machine.

Fig. 5 is a detail perspective view of one of the tension plates of the machine.

Fig. 6 is a detail side elevation of the guide and spacer member.

Fig. 7 is a detail top plan view of one of the bearing plates, and

Fig. 8 is a fragmentary side elevation of a modified form of the machine in which the coils formed lie in engagement with or close to each other.

Referring to the drawings by characters of reference, 1 designates a U-shaped frame, the side arms 2 of which serve as bearings and are flexible, the frame being constructed of resilient metal. Suitable fastening elements 3 are extended through a work bench 4 and the bottom part 5 of the frame 1, and have nuts 6 turned thereon.

Mounted between the arms 2 of the frame are adjustable bearing plates 7 and 8 having their flat faces engaged with one another. Each of these plates is provided with an elongated slot 9 at one end and at its other end is an opening 10. A relatively larger hexagonal opening 11 is formed between the slot 9 and opening 10 in each plate. A bolt 12 is inserted through openings 13 formed in the upper ends of the side arms 2 of the frame 1 and through the opening 10 in the plate 8 and the slot 9 in the plate 7 at the upper ends of said plates, it being noted that said plates are arranged with their opposed faces in engagement with one another and so that the slot in one plate will register with the opening 10 in the other plate. The outer screw-threaded end 14 of the bolt 12 has a thumb-nut 15 turned thereon. An extension 16 on the nut engages the outer face of the adjacent side arm 2.

Mounted upon and in engagement with the inner faces of the side arms are adjustable bearing plates 17 and 18 which are identical with the plates 7 and 8, the slots 18′ in said plates being arranged uppermost, whereas the large openings 19 in said plates are adapted for registration with the alined openings 11 of the plates 7 and 8; and the bolt 12 extends through the slots 18′.

A bolt 20 corresponding to the one 12 is inserted through the slot in the arms 2 and plate 8, also through the small openings in the plates 7 and 17 and the other plate 18. Mounted upon the bolt 20 is a tubular member 21, which extends through the arms 2, and plates 7, 8, 17 and 18, as does the bolt 20. One end of this tubular member 21 is screw-threaded and has a winged nut 22 mounted thereon, said nut engaging the outer face of the adjacent arm 2. The bolt 20 extends beyond the screw-threaded end of the tubular member, is screw-threaded, as at 23, and has a winged nut 24 turning thereon, said nut adapted to engage the outer adjacent end of the tubular member.

The other outer end of the tubular member 21 is rigidly connected with a tension plate 25, which is held against the outer face of the adjacent arm 2 and is provided with a flange 26 on one end which engages one

side edge of said arm to hold the plate against rotation. A movable tension plate 27 is mounted upon the bolt 20 and engages the inner face of the head 28 thereof. A washer 29 is mounted upon the bolt between the plates 25 and 27 and is attached to the plate 27 by a fastening element 30 on the plate 25 inserted through both washer and plate 27. These tension plates and washer comprise a means for holding the material taut below the coil forming means as the material is being wound on the arbor.

A cylindrical rotatable coil-forming arbor 31 is supported by the arms 2 and bearing plates. The openings 11 and 19 in the bearing plates 7 and 8, 17 and 18 aline and in being hexagonal have sufficient area to accommodate arbors of different sizes when the plates are adjusted. The arbor is removably mounted in these arms and plates, and therefore can be taken out and a larger or smaller arbor substituted dependent upon the diameter of the coil desired.

A crank 32 comprising means for turning the arbor is removably mounted upon one end of the arbor 31 and held in position by a set-screw 33. This crank near the point where it is attached to the arbor is provided with an opening 34 adapted to receive one end of the wire or material to be bent into coils, and this provides means carried by the arbor for holding the material to cause it to be wound on the arbor.

A coil-spacing member 35 formed of a comparatively straight length of relatively stiff wire is provided at one end with a hook 36 which is mounted upon the bolt 12 and is interposed between the head of the bolt and the adjacent arm 2. This member 35 extends downwardly toward the arbor and is bent so as to nearly surround the arbor, as at 37, said bent portion being offset so as to provide for the formation of helical coils, as will be later more fully described. The space between the coils formed depends upon the diameter of this member 35, and said member may be removed and one having a larger or smaller diameter substituted by loosening the bolt 12 and removing the hook 36 therefrom. There is provided means to hold the bearing plates in adjusted position which includes sleeves 38 mounted upon the bolt 12 and upon the tubular member 21, said sleeves engaging the opposed faces of plates 8 and 17 and the opposed faces of plates 7 and 18 and effecting a clamping action upon the tightening of the nuts 15 and 22.

In operation the material or wire to be bent is placed between the washer 29 and plate 25 so as to feed from below, is pulled taut, extended up over the offset bent end 37 of the member 35, as shown clearly in Fig. 1 of the drawings, and is then extended through the opening 34 on the crank. Prior to this placement of the material or wire to be bent, the arbor having the desired diameter is placed in position, and by tightening the thumb-nut 15 and winged-nut 22, the sleeves 38 on the bolt 12 and tubular member 21 will effect a clamping action upon the bearing plates and hold them in position to provide an adequate bearing area for the arbor. The flexibility of the frame 1 permits the arms 2 to be forced toward each other when the nuts 15 and 22 are tightened and the bearing plates are caused to bind against the ends of the sleeves. The crank 32 is next secured upon the arbor and after the wire has been fitted as described, upon the turning of the crank, the wire will be wound upon the arbor and owing to the location and shape of the member 35 will be formed into a series of coils equidistantly spaced from one another, as shown in Fig. 1 of the drawings. The member 35 is engaged by the wire being wound upon the arbor 31, said wire being engaged between one face of the shank of the member 35 and the opposed face of the curved portion 37 thereof. Thus as the wire is wound around the arbor, it is coiled to the right and such coiling causes the arbor to move longitudinally to the right in its bearings in accordance with the coiling of the wire. By tightening the winged nut 24 the bolt 20 causes the washer 29 to tightly clamp the wire between it and the plate 25. By holding the material taut it is stretched and when wound upon the arbor is free from irregularities or bumps. The coils formed are therefore evenly spaced and all of the same diameter.

Referring particularly to Fig. 8 wherein I have illustrated a modified form of invention, 39 designates an arbor mounted in bearings, as is the arbor 31, and 40 designates a coil-forming member which is fastened to one of the bearings and partially surrounds the arbor. This member is not offset, as is the one in the preferred form of the invention, and this form is operated as is the preferred form with the exception that the material to be bent is placed in engagement with the outer side of the coil-forming member and upon rotation of the arbor coils engaging one another are formed. This form of device is designed for making closely associated coils or coils which engage each other.

While the tension means is shown below the arbor and the coil-forming means above the arbor, it is to be understood that the parts may be arranged in reverse form or on the side of the arbor. It is also to be understood that the supporting plates and bearings may be made in horizontal instead

of vertical position if so desired, dependent upon the character of work and the support to which the device is to be attached. The tension means need not be used when heavy material that is relatively stiff is being worked with.

I claim:

1. In a machine for forming coils, a U-frame having openings in its side arms, bearing plates slidably adjustably mounted upon the side arms and having openings therein adapted to register with the openings in said side arms to form a bearing for an arbor and an arbor mounted in the registering openings, a coil forming member operatively associated with the arbor, means to rotate the arbor, and means to hold the plates in adjusted position.

2. In a machine for forming coils, a U-frame having openings in its side arms, bearing plates slidably adjustably mounted upon the side arms and having openings therein adapted to register with the openings in said side arms to form a bearing for an arbor and an arbor mounted in the registering openings, a coil forming member operatively associated with the arbor, means to rotate the arbor, means to hold the plates in adjusted position comprising bolts inserted through the side arms of the U-frame, the heads of said bolts engaging the outer face of one side arm, said bolts being extended beyond the outer face of the other side arm and being screw-threaded, and nuts turned on said bolts and adapted for engagement with the outer face of said last-named side arms, said plates having slots therein receiving the bolts.

3. In a machine for forming coils, a U-frame having openings in its side arms, bearing plates slidably adjustably mounted upon said side arms and having openings therein adapted to register with the openings in the side arms, other bearing plates mounted for sliding movement one upon the other between the side arms and having registering openings therein adapted for registration with the openings in the bearing plates and side arms, bolts extending through said side arms, said bearing plates having slots therein to receive the bolts, sleeves mounted upon the bolts and engaging the opposed faces of the first and last named bearing plates, said bolts having screw-threads on certain ends thereof and nuts turned on the screw-threaded portions of the bolts and adapted to engage the outer face of the adjacent side arm to hold the bearing plates in opposed position, and an arbor mounted in the registering openings in the plates and side arms.

4. In a machine for forming coils, a U-frame having openings in its side arms, bearing plates slidably adjustably mounted upon said side arms and having openings therein adapted to register with the openings in the side arms, other bearing plates mounted for sliding movement one upon the other between the side arms and having registering openings therein adapted for registration with the openings in the bearing plates and side arms, bolts extending through said side arms, said bearing plates having slots therein to receive the bolts, sleeves mounted upon the nuts and engaging the opposed faces of the first and last named bearing plates, said bolts having screw-threads on certain ends thereof and nuts turned on the screw-threaded portions of the bolts and adapted to engage the outer face of the adjacent side arm to hold the bearing plates in opposed position, an arbor mounted in the registering openings in the plates and side arms, the coil forming member having one end hooked over one of said bolts and its other end hooked over and partially around the arbor, and means to rotate the arbor.

5. In a coil forming machine, spaced upstanding arms having openings therein, bearing plates slidably adjustably mounted upon the arms and having openings therein adapted to register with the first-named openings whereby a bearing for an arbor is provided by the arms and plates, an arbor rotatably mounted in the registering openings and being removable and longitudinally slidable relative thereto, and means to lock the bearing plates in adjusted position.

6. In a coil forming machine, upright opposed arms having openings therein registering with one another and opposed longitudinal slots therein to one side of the openings, a tubular member mounted in the opposed longitudinal slots, a head on one end of said member engaging the outer face of one of the arms, said member being externally screw-threaded upon its outer end, a nut mounted upon said screw-threaded end and adapted to engage the outer face of the adjacent arm, bearing plates slidably adjustably mounted upon the arms and having openings therein for registration with the openings in the arms to provide a bearing for an arbor, said arms having openings to receive the tubular member, other bearing plates slidably mounted upon one another and supported on the tubular member, said last-named bearing plates having registering openings adapted to register with the openings in the side arms and first-named bearing plates, sleeves mounted upon the tubular member and engaging the opposed faces of the first and second named bearing plates, a bolt extended through the tubular member, a tension plate carried upon one end of

the bolt and adapted to coöperate with the head of the tubular member to frictionally engage material to be formed into coils, said bolt having its other end screw-threaded and extended beyond the unheaded end of the tubular member, a nut mounted upon the screw-threaded end of the bolt and adapted to engage the adjacent end of the tubular member, an arbor mounted in the registering openings, a coil forming member operatively associated with the arbor, and means to rotate the arbor.

Signed at Los Angeles, California, this 14th day of September, 1916.

EDGAR J. BRYAN.

Witnesses:

CHAS. J. CHUNN,

MARY E. BLASDEL.

Copies of this patent may be obtained for five cents each, by addressing the "Commissioner of Patents, Washington, D. C."