AUSTRALIA 669620

P/00/001 28/5/91
Section 29

Patents Act 1990

PATENT REQUEST: STANDARD PATENT/PATENT OF ADDITION

We, being the persons identified below as the Applicant, request the grant of a patent to the person identified below as the Nominated Person, for an invention described in the accompanying standard complete specification.

Full application details follow.

[71]	Applicant:	COMPAGNIE GENERALE DES ETABLISSEMENTS MICHELIN - MICHELIN & CIE
	Address:	12, COURS SABLON, 63040 CLERMONT-FERRAND CEDEX, FRANCE
[70]	Nominated Person:	COMPAGNIE GENERALE DES ETABLISSEMENTS MICHELIN - MICHELIN & CIE
	Address:	12, COURS SABLON, 63040 CLERMONT-FERRAND CEDEX, FRANCE
[54]	Invention Title:	SEALING RING BETWEEN THE BEADS OF A TIRE
[72]	Name(s) of actual Inventor(s):	DOMINIQUE GIRARD

[74] Address for service in Australia: c/o WATERMARK PATENT & TRADEMARK ATTORNEYS, of The Atrium, 290 Burwood Road, Hawthorn, Victoria 3122, Australia Attorney Code: **WM**

BASIC CONVENTION APPLICATION(S) DETAILS

[31] Application Number	[33] Country	Country Code	[32] Date of Application
93 06608	FRANCE	FR	26 MAY 1993

Basic Applicant(s): COMPAGNIE GENERALE DES ETABLISSEMENTS MICHELIN - MICHELIN & CIE

Drawing number recommended to accompany the abstract .....

By our Patent Attorneys,
WATERMARK PATENT & TRADEMARK ATTORNEYS

.....

Stephen K. Plymin.
Registered Patent Attorney

DATED this 24th day of May 1994.

M056243 240594

P/00/008b 12/11/91
Section 29 (1)
Regulation 3.1 (2)

AUSTRALIA

Patents Act 1990

NOTICE OF ENTITLEMENT

(To be filed before acceptance)

We, **COMPAGNIE GENERALE DES ETABLISSEMENTS MICHELIN - MICHELIN & CIE**, of 12, Cours Sablon, 63040 Clermont-Ferrand Cedex, France, being the applicant in respect of Application No. 63288/94 state the following:-

The Persons nominated for the grant of the patent have entitlement from the actual inventor by assignment.

The persons nominated for the grant of the patent are the applicants of the basic application listed on the patent request form.

The basic application listed on the request form is the first application made in a Convention country in respect of the invention.

By our Patent Attorneys,
WATERMARK PATENT & TRADEMARK ATTORNEYS

..... 1 April 1996

Stephen K. Plymin
Registered Patent Attorney

AU9463288

(12) PATENT ABRIDGMENT (11) Document No. AU-B-63288/94
(19) AUSTRALIAN PATENT OFFICE (10) Acceptance No. 669620

(54) Title
SEALING RING BETWEEN THE BEADS OF A TIRE

International Patent Classification(s)
(51)[5] **B60B 030/02**
(51)[6] **B60C 005/16** **B60C 015/028**

(21) Application No. : **63288/94** (22) Application Date : **24.05.94**

(30) Priority Data

(31) Number	(32) Date	(33) Country
93 06608	**26.05.93**	**FR FRANCE**

(43) Publication Date : **01.12.94**

(44) Publication Date of Accepted Application : **13.06.96**

(71) Applicant(s)
COMPAGNIE GENERALE DES ETABLISSEMENTS MICHELIN - MICHELIN & CIE

(72) Inventor(s)
DOMINIQUE GIRARD

(74) Attorney or Agent
WATERMARK PATENT & TRADEMARK ATTORNEYS , Locked Bag 5, HAWTHORN VIC 3122

(57) Claim

1. A sealing ring for mounting on a rim base between the beads of a tire having an inner form ratio H/S at most equal to 0.8, H being the height of the inner cavity of the tire and S being the maximum axial width of the inner cavity of the tire, comprising in unmounted state a meridian section defined by a radial generatrix of radius R_A equal to the radius R_J of a rim base of a mounting rim and of axial width L_{A0} of between 0.8 and 1 times the axial distance L_{B0} between the axially inner ends of the toes of the beads of a tire to be mounted on the rim, a radially outer generatrix of radius greater than the radius R_A by an amount h_C of between 0.05 R_J and 0.40 R_J and two lateral sides of identical profile, the transverse clamping $L_A - L_B$ of the ring on the inner walls of the beads being negative or zero at the level of an inner generatrix, increasing slightly over a radial distance h_1 at least equal to 0.05 R_J, and then increasing more greatly over a radial distance h_2 at most

.../2

equal to 0.4 R_J, then becoming at most constant over the radial distance h_3 at least equal to 0.02 R_J, the sum of the distances h_1, h_2 and h_3 being equal to the height h_B of the lateral sides of the ring, the difference $h_B - h_C$ being at most equal to 0.05 R_J and the distances L_A and L_B being the width of the ring and the distance between the beads, respectively, measured across a generatrix G located at a variable radial distance h from the generatrix of the meridian section of radius R_A.

P/00/011 28/5/91
Regulation 3.2(2)

AUSTRALIA

Patents Act 1990

ORIGINAL
COMPLETE SPECIFICATION
STANDARD PATENT

Application Number:

Lodged:

Invention Title: SEALING RING BETWEEN THE BEADS OF A TIRE

The following statement is a full description of this invention, including the best method of performing it known to us :-

SEALING RING BETWEEN THE BEADS OF A TIRE

of which the following is a

SPECIFICATION

BACKGROUND OF THE INVENTION

The present invention relates to an annular element intended to be placed between the two beads of a tubeless tire, mounted on a flat-base rim, one of the shoulders of which is removable; the tire is intended, in particular, for equipping handling vehicles. It also concerns the assembly of the ring, the tire, and the rim.

Ordinarily tires for handling vehicles are mounted on flat rims, are tires which are cured by means of vulcanization bladders, known as "honeycombs", such as described, for instance, in US Patent 3,970,416, and are used with an inner tube and an annular protective element of slight thickness placed between said tube and the base of the rim. This annular element generally has axial ends or lips of suitable shape so as not to damage the inner tube.

Tires for handling vehicles in most cases have an internal form ratio H/S of at most 0.8 and frequently close

to 0.5, H being the height of the inner cavity of the tire measured between the rim base and the point of the inner wall of the cavity furthest from the axis of rotation of the tire, and S being the maximum axial width of the inner cavity. It follows from this that various injuries appear on the inner tubes, particularly rapid wear of the tubes, which are incidental to the use of such tires.

Furthermore, these tires are generally mounted on flat rims formed of three elements, namely the rim base, which is integral with a first rim shoulder, the locking ring, and the second ring shoulder. When the rim is intended for use with a tubeless tire, it is possible to mount such a tire on such a rim with a sealing joint being provided between the bead of the tire and the rim on the side of the removable rim shoulder. Nevertheless, the fact that the dimensional characteristics of the rim have rather large tolerances, that these rims are frequently deformed and ill-fitted, and that the difficulties in positioning and maintaining a sealing joint in the correct position are numerous does not make it possible to obtain proper tightness upon the mounting of a tubeless tire on a flat rim or a rim of the same type having three elements.

SUMMARY OF THE INVENTION

In order to obtain the tightness of a tubeless tire mounted on a rim of the type described, the invention employs a sealing ring placed on the base of the rim located between the two beads of the tire for mounting said tire on the rim. This ring is characterized by the fact that its

meridian section, in free state, is defined by a radially inner generatrix of a radius equal to the radius of the portion of the rim on which it will be placed and of an axial width between 0.8 and 1 times the axial distance between the axially inner ends of the bead toes, by a radially outer generatrix of a radius greater than the radius of the inner generatrix by an amount h_c of between 0.05 R_j and 0.40 R_j, R_j being the radius at the seat of the wheel, and by two lateral sides of identical profiles such that the transverse clamping of the ring on the inner walls of the beads, which is negative or zero at the level of the inner generatrix then increases slightly over a radial distance h_1 equal to at least $0.05R_j$, and then increases greatly over a radial distance h_2 equal to at most $0.4R_j$, then becoming at most constant over the radial distance h_3 equal to at least $0.02R_j$ and which, added to the heights h_1 and h_2, represents the height h_B of the lateral sides of the ring, the difference $h_B - h_C$ being at most equal to 0.05 R_j.

By transverse clamping of the sealing ring on the axially inner walls of the beads over a generatrix of given radius with respect to the axis of rotation, there is understood the difference, at the level of this generatrix, between the axial width of the unmounted ring and the axial distance between the two beads of the tire mounted on its service rim and inflated to its rated pressure. If the transverse clamping is called s, the axial width of the ring L_A and the axial distance between the beads L_B, then $s = L_A - L_B$.

By a slight increase of the clamping over the distance h_1 there is understood a uniform continuous and

substantially linear increase until reaching, at the height of the generatrix located at the radial distance h_1 from the base of the rim, a maximum positive clamping preferably equal to at most 0.3 L_A.

A large increase in the clamping over the distance h_2 other than zero is a uniform, continuous and substantially linear increase until reaching at the height of the generatrix spaced radially from the rim base by the distance $h_1 + h_2$, a maximum linear positive clamping, preferably at least equal to 0.15 L_A.

A large increase over the distance other than zero is an abrupt increase up to a clamping value at least equal to 0.15 L_A.

By at most constant clamping, there is to be understood a constant clamping or a decreasing clamping, with the radial distance measured with respect to the base of the rim, while remaining positive.

The distance h_1 will advantageously be between $0.05R_J$ and $0.20R_J$ and, over a radial distance at most equal to $0.5h_1$, the clamping L_A-L_B will advantageously be negative, the width of the ring being smaller than the axial distance between the two beads, which permits easier mounting of the tire-ring assembly on the service rim. The radial distance h_2 will advantageously be between 0 and $0.1R_J$, which results in a large increase in clamping over a distance of slight height and thus permits a better sealing engagement of the lips of the sealing ring.

As to the distance h_3, it will advantageously be between $0.02R_J$ and $0.1R_J$. The sequence of increase thus described permits a better deformation of the lips of the

sealing ring due to their shapes, and thus increased effectiveness from the point of view of sealing. The shape of the meridian section of the ring permits the appearance, at the optimal place, of the force of pressure of the lips of the ring on the beads necessary to assure the tightness, without the necessity of having a circumferential tensile stressing of said ring mounted on the rim.

In order to obtain a very easy mounting of the ring and the tire, the Shore A hardness of the material constituting it will preferably not be greater than 65, the Shore A hardness being measured in accordance with ASTM Standard D67549T. The use of such a property is advantageously possible in view of the shape of the ring claimed in accordance with the invention which, as known, for instance from French application 2 246 409, has the same advantages as the prior art rings and, in particular, the advantage of maintaining the beads of the tire in place when the tire is traveling under very low or even zero pressure.

Another substantial advantage of the ring in accordance with the invention is the simplicity of its manufacture and accordingly its low cost: it requires, in fact, no backing reinforcement for holding it flat against the base of the rim. Due to the extensibility and extension of the lips of the ring, a sufficient clamping appears on the base of the rim for good holding and centering of the ring.

DESCRIPTION OF DRAWINGS

The characteristics and advantages of the invention will be better understood from the following description, read with reference to the drawings which illustrate several embodiments in non-limitative manner and in which:

Fig. 1 diagrammatically shows an undeformed ring within a tire of size 180/70 R8 XZA mounted on its 4.33/8 service rim;

Fig. 2 similarly shows a meridian section of a sealing ring in accordance with the invention;

Fig. 3 similarly shows a variant of the sealing ring;

Fig. 4 similarly shows the ring in accordance with the invention, deformed within the tire, mounted and inflated to its rated pressure.

DESCRIPTION OF PREFERRED EMBODIMENTS

The ring 3 in accordance with the invention is used with a tire P, described above, for handling equipment vehicles. The tire P comprises a tread 11 connected, by two side walls 10, to two beads 12, each of which is reinforced by a bead wire 14 (Fig. 4) around which the carcass armature 13 is anchored forming turn-ups 13'. This tire P, having an inner form ratio H/S of 0.7, is mounted on a rim J, comprising a flat rim base 20 integral with a fixed rim shoulder 21 and attached to a removable rim shoulder 22 by a locking ring 23.

In these rim configurations, the radius R_f at the rim seat is the radius of the rim base. The sealing ring 3 shown in Fig. 1 within the tire P mounted on the rim J and in non-deformed state, is shown in detail in Fig. 2. The meridian section of the ring 3 is defined radially on the inside by a generatrix 31 parallel to the axis of rotation of the mounting rim J, of radius R_A equal to 101.6 mm, and to the nominal radius R_f of the rim base 20, and radially on the outside by a non-linear generatrix 32, such that the radial distance h_C between the said generatrices measured on the axis of symmetry XX' of the meridian section is less than the radial distance h_B between these same generatrices measured over a line parallel to the axis of symmetry XX', passing through the end of the section furthest axially from the said axis of symmetry. In the case studied and shown, h_C is equal to 0.17 R_f and h_B to 0.18 R_f. On the side, the meridian section of the ring 3 is defined by two sides 30 symmetrical with respect to the axis XX' and formed, starting from the generatrix 31, by the straight-line segments 33, 34 and 35, respectively.

If one considers a generatrix G parallel to the generatrix 31 and spaced radially from said generatrix 31 by the distance h which is variable between a value of zero and the value h_B, this generatrix G has with the two lateral sides 30, points of intersection A which are spaced apart axially by the distance L_A and, with the inner walls of the beads 12 of points of intersection B which are spaced apart axially by the distance L_B. The distance $L_A - L_B$ is the clamping s of the ring on the beads 12.

As shown in Fig. 2, when the distance h is zero, the generatrix G is none other than the generatrix 31 and the clamping s is then negative, the axial distance L_{A0} which is the width of the generatrix 31 being less than the axial distance L_{B0} between the two axially inner ends of the toes 15 of the beads 12. Over the radial distance h_1 equal to 0.1 R_f and corresponding to the segments 33, the clamping $L_A - L_B$ increases slightly, passing from a negative value to a positive value at the level of the height h_0 and equal to 0.05R_f and increasing up to the level of the height h_1 equal to 0.13L_A. Over the radial distance h_2, equal to 0.02R_f and corresponding to the segments 34, the clamping s increases greatly and passes from the value 0.13L_A to a value 0.38L_A for the relatively small radial distance h_2. Over the radial distance h_3, the clamping s decreases, due to the curvature of the inner wall of the bead 12, while remaining positive and becoming equal to 0.32L_A at the level of the radial distance h_B.

Fig. 3 shows a variant of the sealing ring 3 in which the following differences from the sealing ring of Fig. 2 can be noted. The width L_{A0} of the generatrix 31 is equal to the axial distance L_{B0} between the two axially inner ends of the toes 15 of the beads 12; the clamping is therefore zero. It then becomes positive and increases as in the case Fig. 2, but the segment 33 of said figure is replaced by a first curved arc 33, and the segment 34 is replaced by a second curved arc 34, these two curved arcs having extensions which intersect at O, located at the radial distance h_1 from the generatrix 31. The angular

point at O can advantageously be replaced by a circular arc of small length and strong curvature, as shown on the side of the ring located to the left in Fig. 3. The curved arc 34 is extended radially to the outside by a straight-line segment 35 which, in this example, is substantially parallel to the inner wall of the bead 12, the length of the distance h_3, and the values h_1, h_2, h_3 of Fig. 3 being the same as those of Fig. 2.

Fig. 4 shows the assembly formed of the tire P, the ring 3, and the rim J as it appears mounted and after inflation by means of the vent valve extension V. The sealing ring 3, lubricated on its inner cylindrical face and on its side walls, is put in place within the tire P. The tire sealing ring assembly is then mounted on the rim J and the tire is inflated. The segments or curved arcs 33, 34 apply themselves against the inner walls of the beads 12 exerting a contact pressure which is definitely greater at the level of the lips 40 of the ring 3 than at the level of the segments or curved arcs 33, the lips 40 being formed by the portions of vulcanized rubber stock forming the ring 3, which are located between the generatrix 32 and the segments 35 and 34 of the lateral sides of the ring.

THE CLAIMS DEFINING THE INVENTION ARE AS FOLLOWS:

1. A sealing ring for mounting on a rim base between the beads of a tire having an inner form ratio H/S at most equal to 0.8, H being the height of the inner cavity of the tire and S being the maximum axial width of the inner cavity of the tire, comprising in unmounted state a meridian section defined by a radial generatrix of radius R_A equal to the radius R_J of a rim base of a mounting rim and of axial width L_{A0} of between 0.8 and 1 times the axial distance L_{B0} between the axially inner ends of the toes of the beads of a tire to be mounted on the rim, a radially outer generatrix of radius greater than the radius R_A by an amount h_C of between 0.05 R_J and 0.40 R_J and two lateral sides of identical profile, the transverse clamping $L_A - L_B$ of the ring on the inner walls of the beads being negative or zero at the level of an inner generatrix, increasing slightly over a radial distance h_1 at least equal to 0.05 R_J, and then increasing more greatly over a radial distance h_2 at most equal to 0.4 R_J, then becoming at most constant over the radial distance h_3 at least equal to 0.02 R_J, the sum of the distances h_1, h_2 and h_3 being equal to the height h_B of the lateral sides of the ring, the difference $h_B - h_C$ being at most equal to 0.05 R_J and the distances L_A and L_B being the width of the ring and the distance between the beads, respectively, measured across a generatrix G located at a variable radial distance h from the generatrix of the meridian section of radius R_A.

AUSTRALIAN PATENT OFFICE

2. A sealing ring according to Claim 1, in which the increase in the clamping over the radial distance h_1 is uniform, continuous and substantially linear until reaching, at the level of the height h_1, a maximum positive clamping at most equal to 0.30 L_A.

3. A sealing ring according to Claim 2, in which the increase of the clamping over the radial distance h_2 is such as to reach a maximum positive clamping at least equal to $0.15L_A$ at the level of the height $h_1 + h_2$.

4. A sealing ring according to Claim 3, in which the clamping over the radial distance h_3 is positive and constant.

5. A sealing ring according to Claim 1, in which the radial distance h_1 is between $0.05R_j$ and $0.20R_j$.

6. A sealing ring according to Claim 5, in which the radial distance h_2 is between 0 and $0.1\ R_j$.

7. A sealing ring according to Claim 6, in which the radial distance h_3 is between $0.02R_j$ and $0.1R_j$.

8. A sealing ring according to Claim 1, in which it is formed of a vulcanized rubber stock of Shore A hardness of at most 65 points.

9. An assembly comprising a tire, a rim and a ring, in which the ring is a sealing ring according to Claim 1.

DATED this 24th day of May 1994.

COMPAGNIE GENERALE DES ETABLISSEMENTS MICHELIN - MICHELIN & CIE

WATERMARK PATENT & TRADEMARK ATTORNEYS
"THE ATRIUM"
290 BURWOOD ROAD
HAWTHORN. VIC. 3122.

ABSTRACT OF THE DISCLOSURE

An annular element (3) placed between the two beads (12) of a tire (P) mounted on a flat-base rim (J). In order to be able to use the tire on said rim without an inner tube, the annular element, in order to assure the tightness of the assembly, has in meridian section a contour and, in particular, two lateral sides (30) such that the clamping s between the ring and the beads, which is zero or even negative at the base of the ring, increases then slightly over a certain radial distance h_1 and then more greatly over a distance h_2 radially adjacent the first distance.

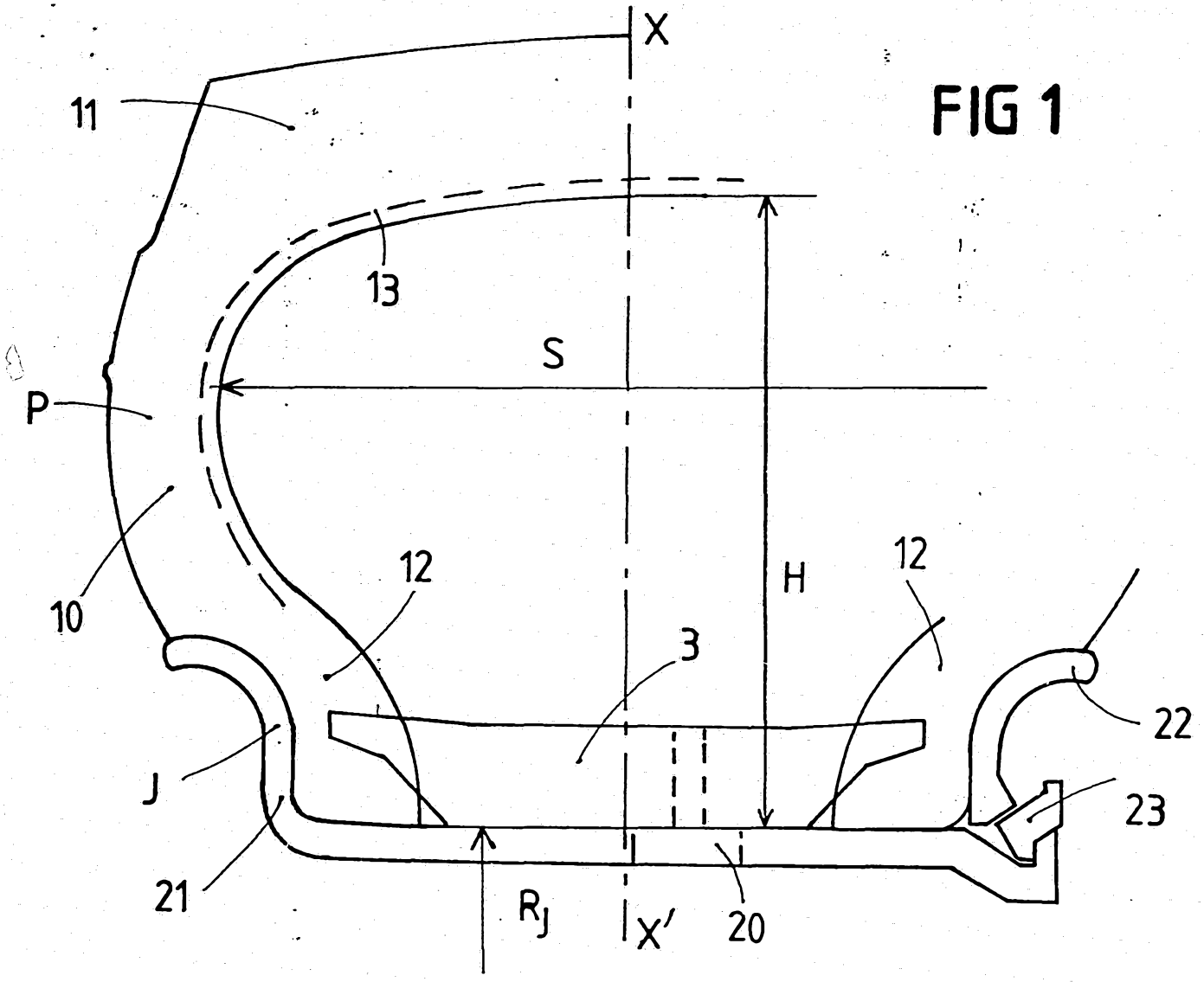

FIG 1

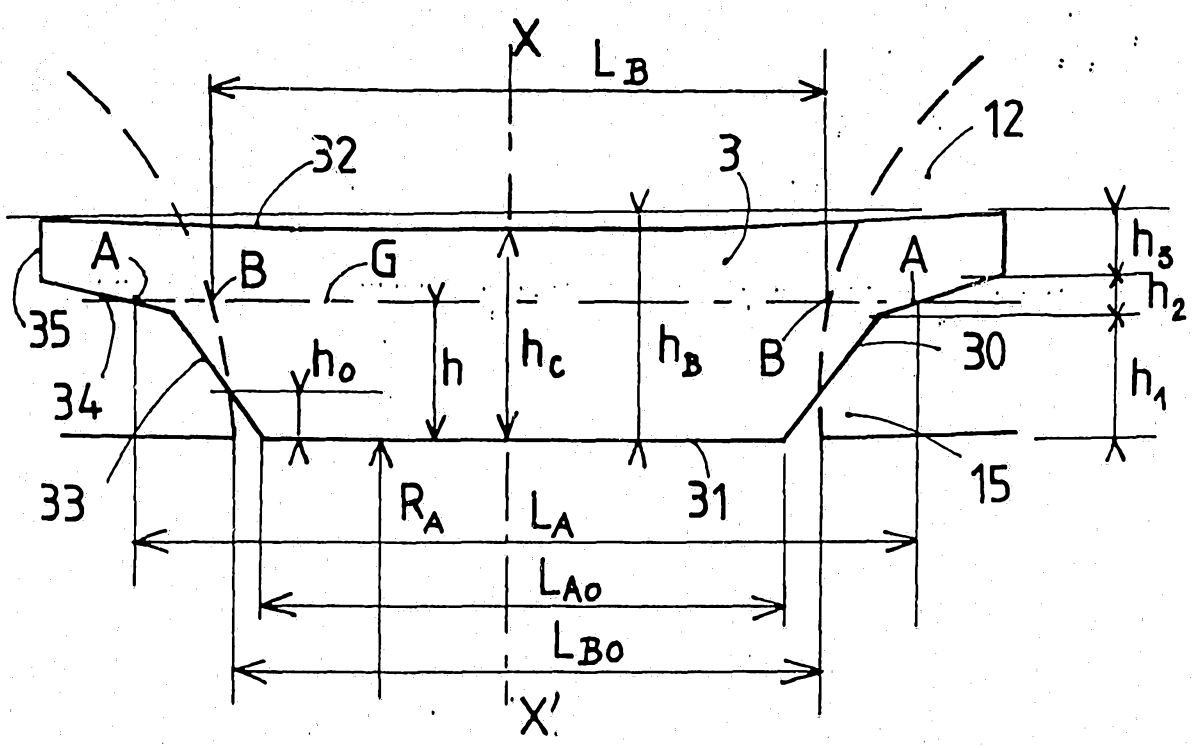
X
L_B
12
32
3
A
B
G
A
h_3
h_2
35
h_o
h
h_c
h_B
B
30
h_1
34
33
R_A
L_A
31
15
L_{Ao}
L_{Bo}
X'

FIG 2

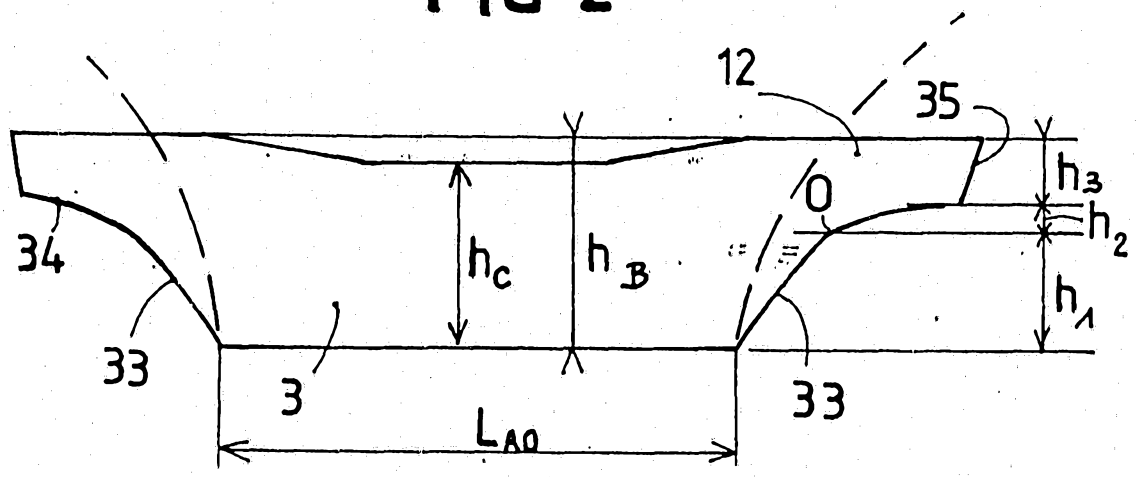
12
35
h_3
O
h_2
34
h_c
h_B
h_1
33
3
33
L_{Ao}

FIG 3

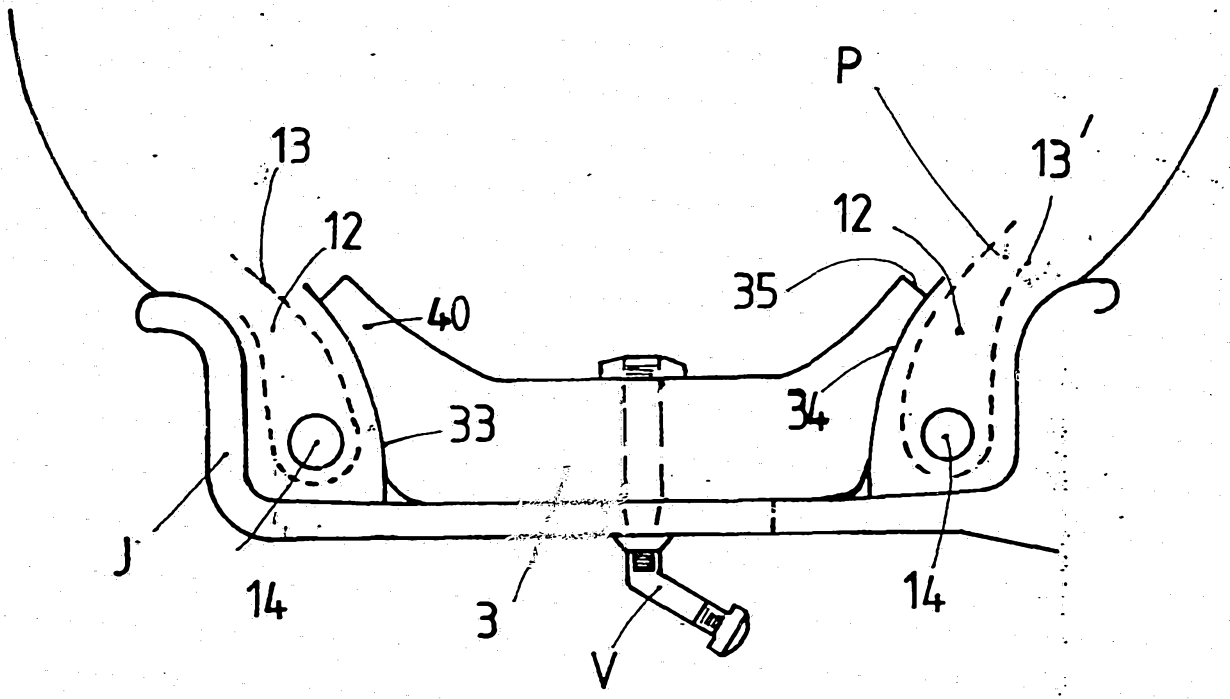

FIG 4