March 29, 1949. A. M. ISAACSON ET AL 2,465,537

CABLE FORMING APPARATUS

Filed Feb. 17, 1945 7 Sheets-Sheet 1

FIG. I

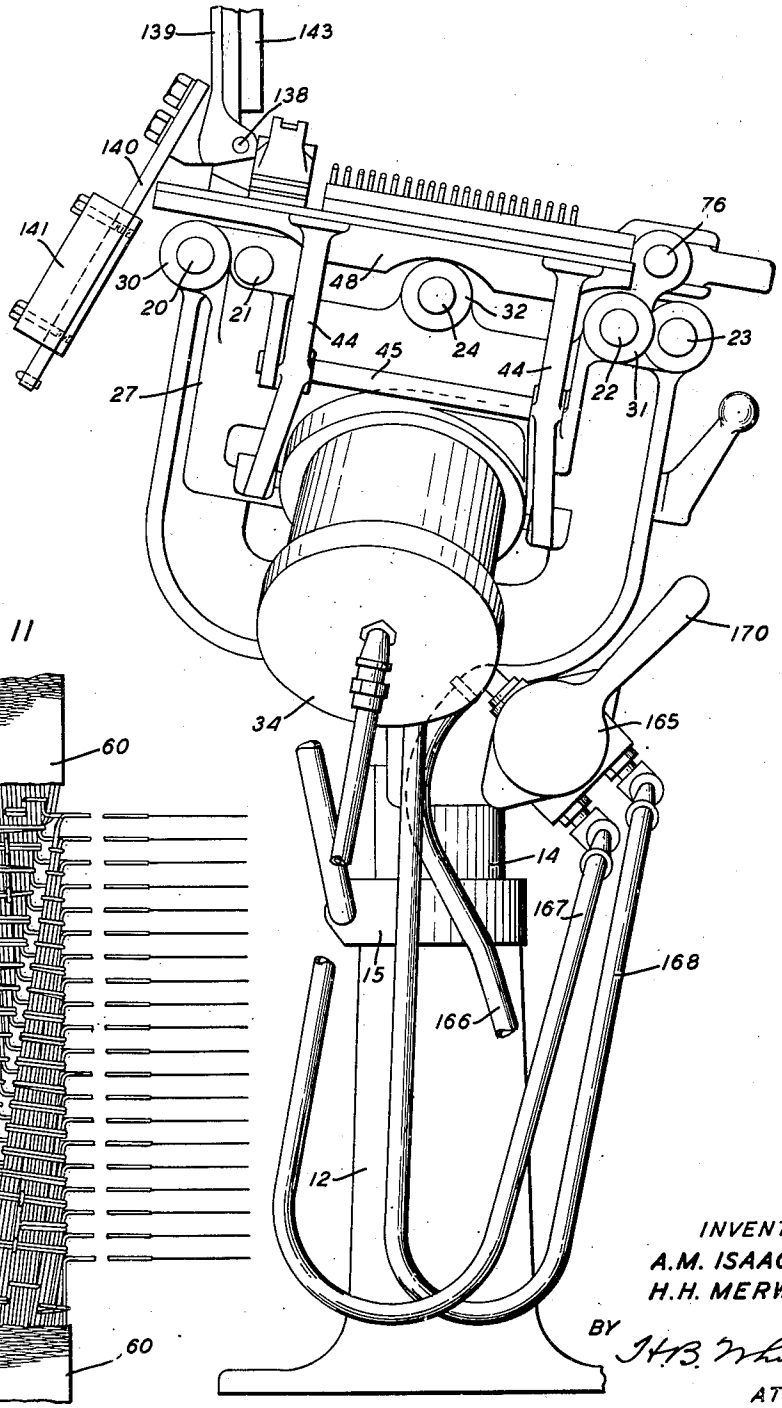

FIG. II

INVENTORS
A.M. ISAACSON
H.H. MERWIN

BY H.B. Whitfield

ATTORNEY

March 29, 1949. A. M. ISAACSON ET AL 2,465,537

CABLE FORMING APPARATUS

Filed Feb. 17, 1945 7 Sheets-Sheet 2

FIG. 2

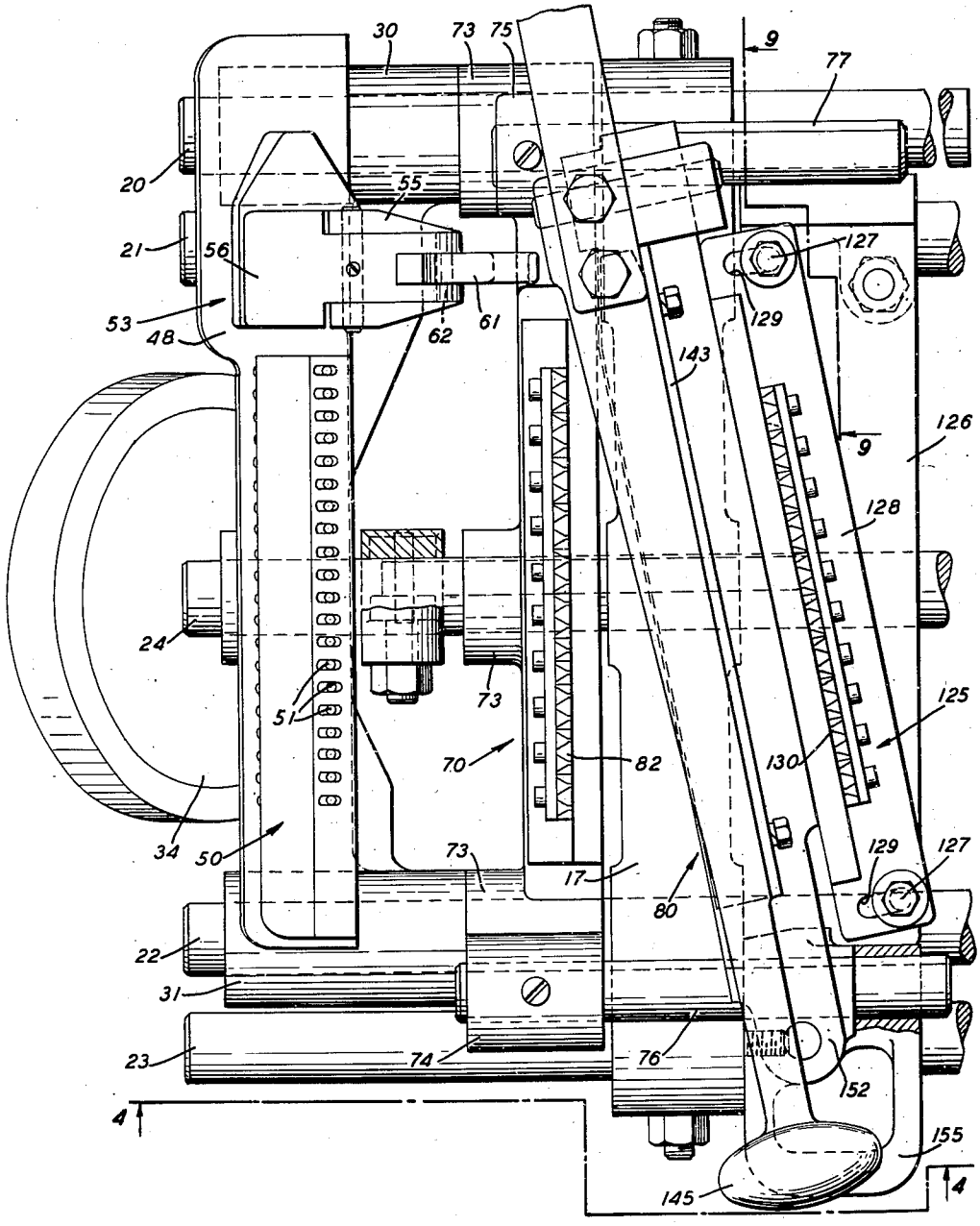

INVENTORS
A.M. ISAACSON
H.H. MERWIN

BY H.B. Whitfield

ATTORNEY

March 29, 1949. A. M. ISAACSON ET AL 2,465,537

CABLE FORMING APPARATUS

Filed Feb. 17, 1945 7 Sheets-Sheet 3

FIG. 3

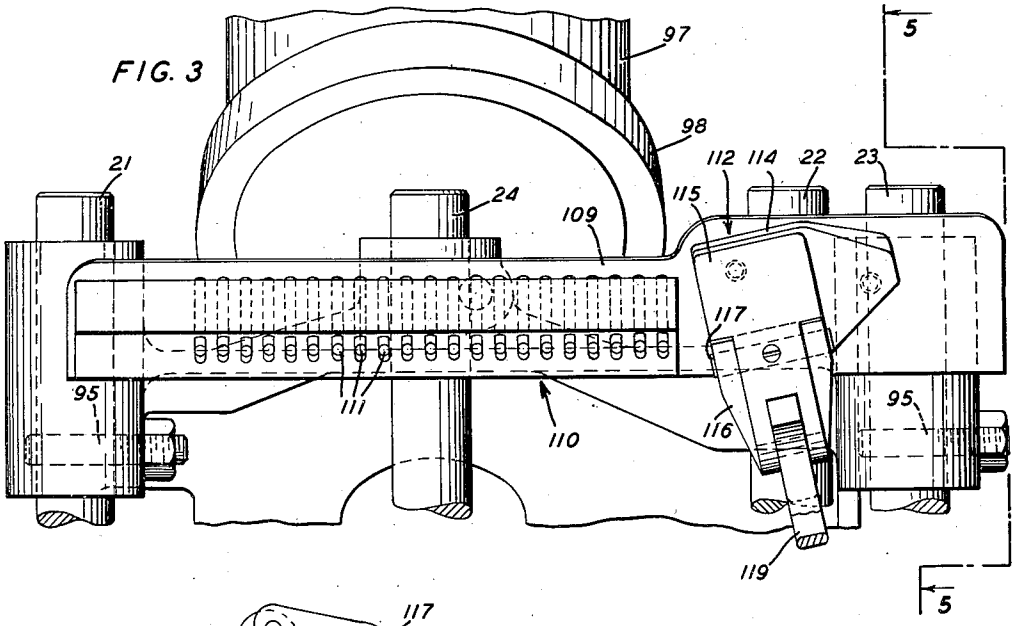

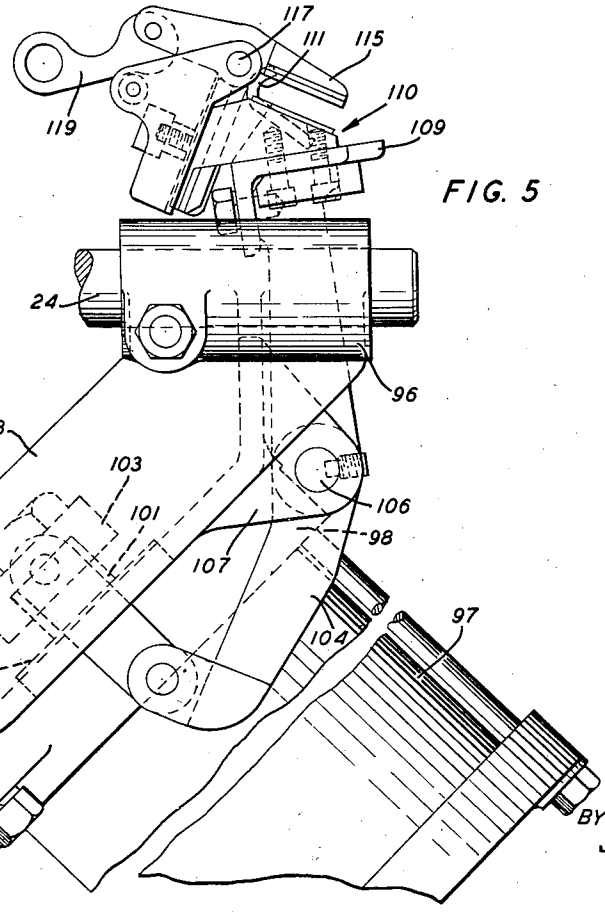

FIG. 5

INVENTORS
A.M. ISAACSON
H.H. MERWIN

BY H.B. Whitfield.
ATTORNEY

March 29, 1949. A. M. ISAACSON ET AL 2,465,537

CABLE FORMING APPARATUS

Filed Feb. 17, 1945 7 Sheets-Sheet 4

FIG. 4

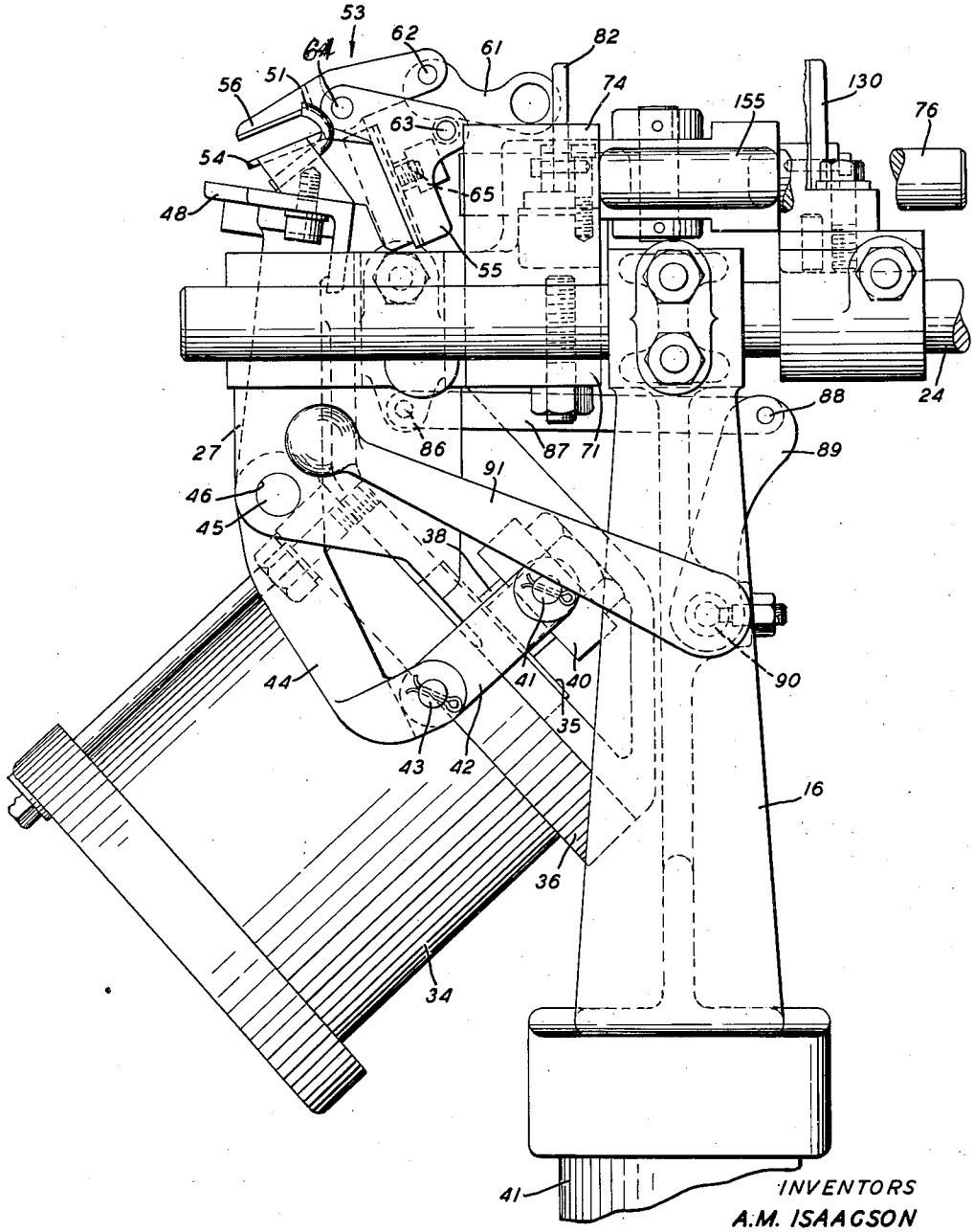

INVENTORS
A.M. ISAACSON
H.H. MERWIN

BY H.B. Whitfield.
ATTORNEY

March 29, 1949. A. M. ISAACSON ET AL 2,465,537

CABLE FORMING APPARATUS

Filed Feb. 17, 1945 7 Sheets-Sheet 5

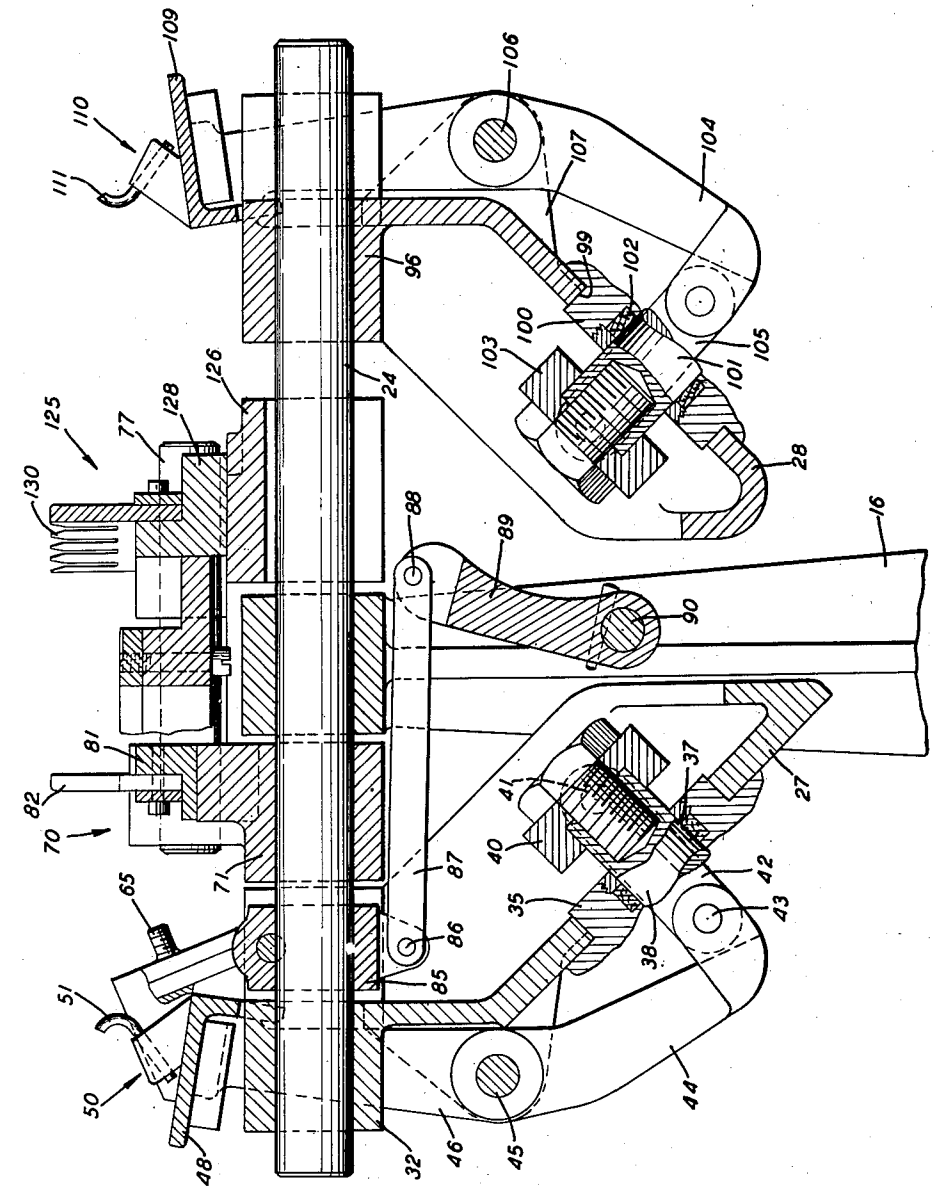

FIG. 6

INVENTORS
A.M. ISAACSON
H.H. MERWIN

BY H.B. Whitfield

ATTORNEY

March 29, 1949. A. M. ISAACSON ET AL 2,465,537

CABLE FORMING APPARATUS

Filed Feb. 17, 1945 7 Sheets-Sheet 6

FIG. 7

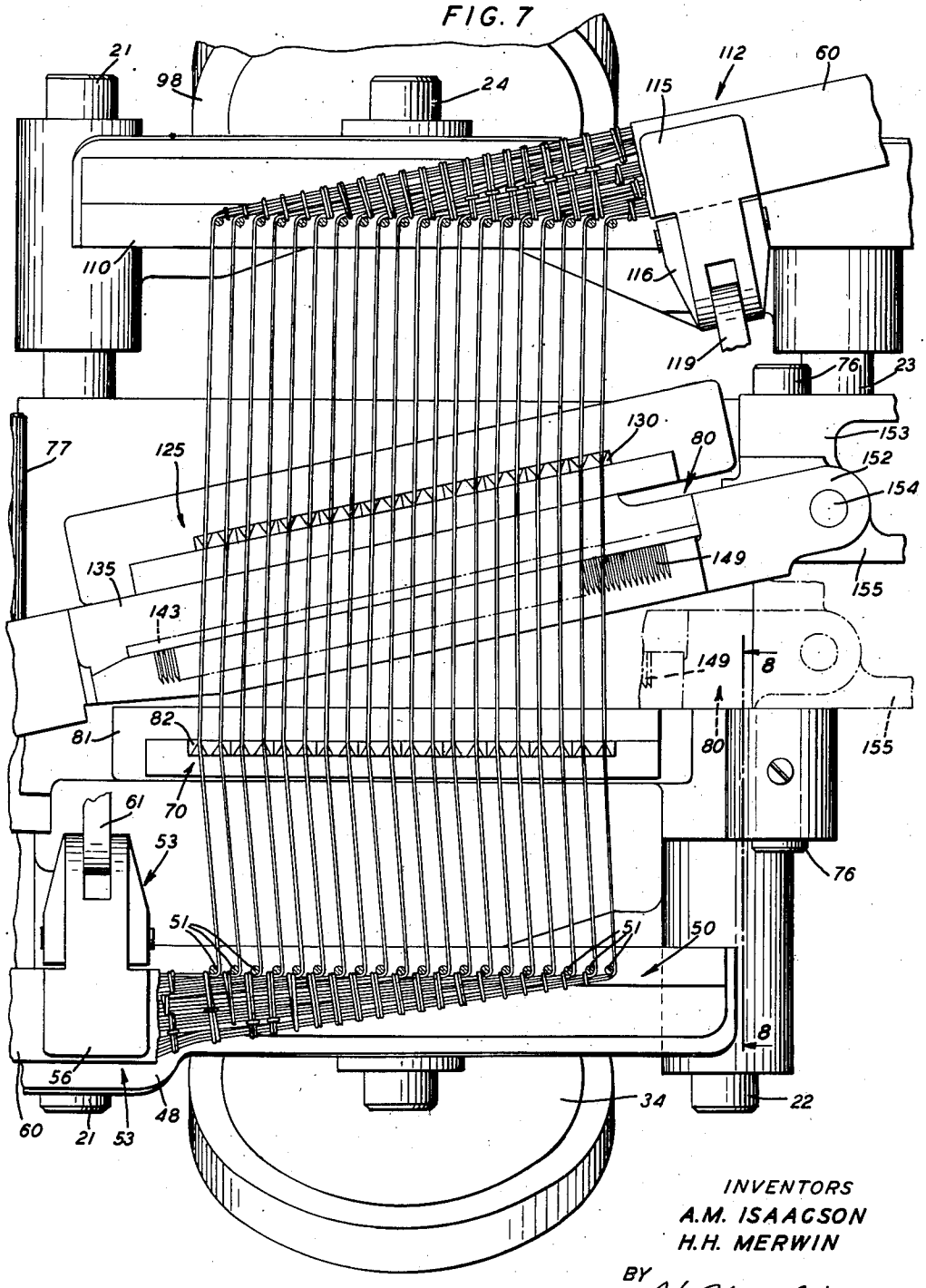

INVENTORS
A.M. ISAACSON
H.H. MERWIN

BY H.B. Whitfield
ATTORNEY

March 29, 1949. A. M. ISAACSON ET AL 2,465,537

CABLE FORMING APPARATUS

Filed Feb. 17, 1945 7 Sheets-Sheet 7

FIG. 8

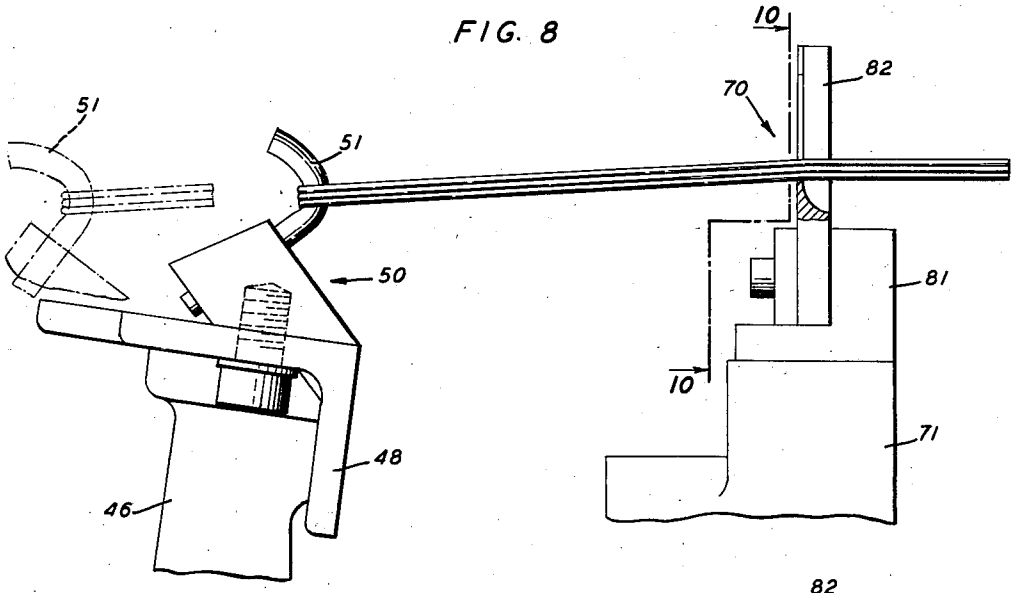

FIG. 10

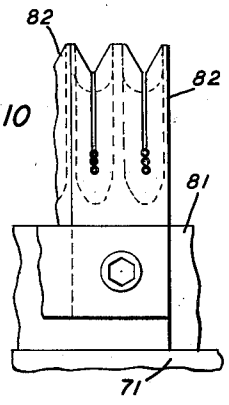

FIG. 9

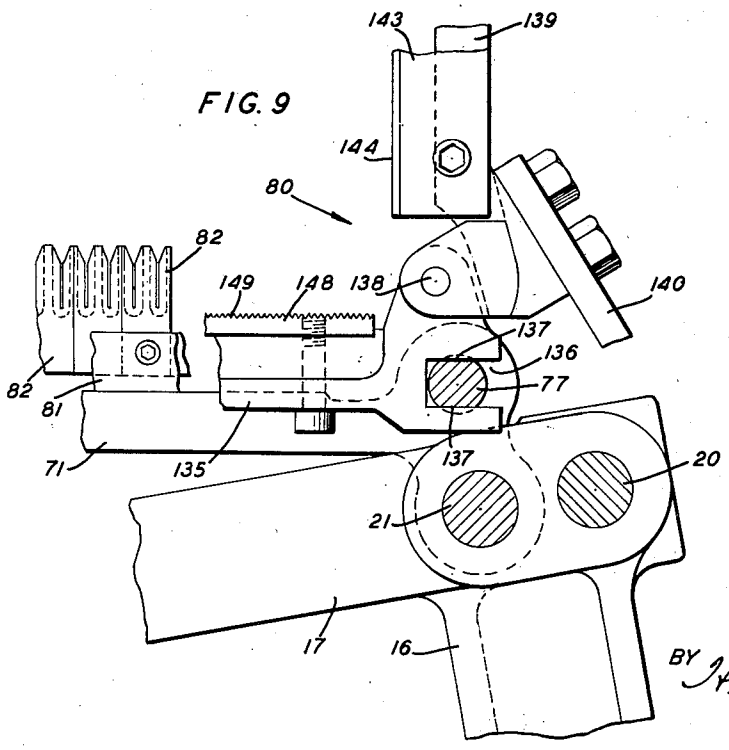

INVENTORS
A.M. ISAACSON
H.H. MERWIN
BY H.B. Whitfield
ATTORNEY

Patented Mar. 29, 1949

2,465,537

UNITED STATES PATENT OFFICE

2,465,537

CABLE FORMING APPARATUS

Arthur M. Isaacson, Fanwood, and Harry H. Merwin, Rutherford, N. J., assignors to Western Electric Company, Incorporated, New York, N. Y., a corporation of New York

Application February 17, 1945, Serial No. 578,544

13 Claims. (Cl. 81—9.51)

1

This invention relates to cable forming apparatus, and more particularly to apparatus for forming and skinning the electrical conductors or electrical cables.

In the manufacture of telephone equipment, particularly that for use in telephone exchanges or other places where a plurality of switchboard units are required, it is necessary to provide for the repetition of call lines for the various switchboard units to enable an operator of any one of the units to complete connections on one unit with call numbers originally assigned or made a part of a unit remotely positioned therefrom. As an example, call numbers 1 to 20 inclusive may be disposed in and made a part of 10 adjacent switchboard units, these call numbers terminating in like jack strips, each requiring a number of conductors for each jack in each strip. The respective jacks of each of these strips must, therefore, be connected together to complete this interconnection of like lines of the switchboard units. To accomplish this connection, multiple cables are formed with desired lengths of conductor wires extending from both ends thereof with the insulation removed given distances from the ends of the conductors and the bared ends of the conductors fixed suitably to the respective portions of the jacks. Further, to assure the proper connections, the tip, ring and sleeve conductors connected to their respective terminals of the jacks of the original or first unit, must complete the same connections with like jacks of the second switchboard units and similar multiple cables may connect the like terminals of the jack strip of the second unit to those of the third unit and so on until all 10 of the switchboard units have been wired to enable an operator of any one of the units to complete a connection with any one of the call lines 1 to 20 inclusive of the first unit.

An object of the invention is to provide an apparatus which is simple in construction and highly efficient in operation for forming, skinning and cutting multiple conductor cables.

With this and other objects in view, the invention comprises a cable forming and stripping apparatus to clamp portions of a cable upon each side of a section where the sheath has been removed, spaced combs for use in positioning selected groups of the conductors with respect to a

2

cutting unit, the latter being actuable for cutting the conductors and leaving given lengths of the conductors extending from the combs, and means to move the conductors with respect to stripping units to cause the latter to strip the insulation from the ends of the conductors.

Other objects and advantages will be apparent from the following detailed description when considered in conjunction with the accompanying drawings, wherein

Fig. 1 is a side elevational view of the apparatus;

Figs. 2 and 3 combined, illustrate a top plan view of the apparatus without a cable in place;

Fig. 4 is a fragmentary, vertical, sectional view taken along the line 4—4 of Fig. 2;

Fig. 5 is a fragmentary detailed view taken along the line 5—5 of Fig. 3 illustrating a portion of the apparatus which could not be shown in Fig. 4;

Fig. 6 is a fragmentary, vertical, sectional view taken at approximately the center of the apparatus;

Fig. 7 is a fragmentary top plan view of the apparatus showing the combing of the electrical conductors of a cable prior to the operation of the cutting unit;

Fig. 8 is a fragmentary detailed view of one of the combs and stripping units, this view being taken along the line 8—8 of Fig. 7;

Fig. 9 is a fragmentary detailed view taken substantially along the line 9—9 of Fig. 2 with the knife of the cutting unit in its open position;

Fig. 10 is a fragmentary detailed sectional view of one of the stripping units, this view being taken along the line 10—10 of Fig. 8, and

Fig. 11 illustrates the interfitting arrangement of the formed ends of the cables.

Referring now to the drawings, attention is first directed to Fig. 1 wherein a pedestal 12 is shown as constituting a main support for the apparatus. A tubular member 14 is movably disposed in the pedestal 12 so that the upper structure of the apparatus may be disposed at any desired height from the floor which may be suitable to the operator. The tubular member 14 is held at any desired position in the pedestal through the aid of a split collar 15, the latter being adjustably secured to the tubular member and resting upon the upper edge of the pedestal.

A yoke or upper support 16 is fixedly mounted upon the upper end of the tubular member 14 by suitable means (not shown). Although the member 16 is defined as a yoke, its upper end is closed with the web 17 (Fig. 2), and provided with apertures, for supporting rods 20, 21, 22 and 23 disposed in pairs at the outer portions thereof, and to also receive an actuating rod 24 disposed adjacent the center of the web 17. Brackets 27 and 28 shown in general detail in Figs. 4 and 5, respectively, and in a sectional view in Fig. 6, are mounted upon opposite ends of certain of the supporting rods 20 to 23 inclusive and including apertures for the actuating rod 24. As will hereinafter be described, the bracket 27 is to be moved longitudinally of its respective supporting rods, while the bracket 28 remains stationary.

Upon considering first the bracket 27 and its associated parts, attention is directed to Figs. 1, 2, 4 and 6. The upper portion of the bracket is provided with bearing members 30 and 31 to receive the supporting rods 20 and 22 upon which a bracket 27 receives its main support. A bearing portion 32 of the bracket 27 receives the actuating rod 24, the latter assisting the rods 20 and 22 in supporting the bracket. An air cylinder 34 is mounted upon the bracket 27 with a portion 35 of the cylinder head 36 extending through a wall of the bracket and providing an air tight aperture 37 for a piston rod 38. A piston rod 38 is fixed to a piston (not shown) movable in both directions in the cylinder 34 by air under pressure as will hereinafter be described. The piston rod 38 has a connecting member 40 mounted upon the outer end thereof, the member having integral trunnions on the outer ends thereof as indicated at 41 for connection with links 42. The links 42, which are disposed one upon each side of the air cylinder, have their lower ends pivotally connected as at 43 to levers 44, the latter being mounted upon a shaft 45 at spaced positions as shown in Fig. 1. The ends of the shaft are journalled in bearing portions 46, which are integral parts of the bracket 27.

A lateral member 48, angular in cross-section, is mounted upon the upper ends of the levers 44 and extends substantially the full width of the bracket as shown in Fig. 2. A comb, indicated generally at 50 is mounted upon the member 48 and includes a plurality of equally spaced pins 51 of the contour shown particularly in Figs. 4 and 6. A cable clamp indicated generally at 53 is also mounted upon the member 48 as shown in Figs. 2 and 4, this clamp including a jaw 54, fixed to the member 48 and adjustably supporting a bracket 55 upon which a movable jaw 56 is mounted.

In the present embodiment, the cables to be formed are of the flat type, indicated at 60, and in view of this fact, the cable engaging portions of the jaws 54 and 56 are constructed so that, when in the gripping positions, their cable engaging surfaces will be parallel with each other. The upper or movable jaw 56 has an operating handle 61 pivotally connected thereto at 62, this connection being eccentric with the adjacent portion of the handle, which portion serves as a cam in cooperation with a roller 63 to force the movable jaw 56 into clamping position relative to the fixed jaw 54. A shaft 64, upon which the movable jaw 56 is mounted, and the roller 63 are supported by the bracket 55, which is connected for adjustment with respect to the stationary jaw 54 along a path perpendicular to the cable engaging surface of the stationary jaw.

This connection in the present instance is a tongue and groove connection. The bracket 55 may be secured in any desired position to the structure of the stationary jaw through the aid of a clamping bolt 65, or other suitable means.

A stripping unit 70 includes a supporting bracket 71 with bearing portions 73 to receive the supporting rods 20 and 22 together with the actuating rod 24. The supporting bracket 71 is therefore movably mounted upon the supporting rods 20 and 22 but is fixed to the actuating rod 24 for movement therewith. The supporting bracket 71 also has bearing portions 74 and 75 at the outer ends thereof and above the outer bearing portions 73 to receive parallel rods 76 and 77 for a cutting unit indicated generally at 80. Returning again to the stripping unit 70, an angular member 81 is mounted upon the supporting member 71 and has a series of stripping blades 82 mounted thereon in pairs disposed in general alignment with the pins 51 of the comb 50.

The bracket 27 with its associated mechanism including the comb 50, together with the stripping unit 70, having been defined as being movably supported upon the rods 20 and 22 and fixed in their selectively spaced positions upon the actuating rod 24, it will be apparent that axial movement of the rod 24 will cause simultaneous movement of both the comb 50 and the stripping unit 70. The purpose of this movement of these two units will hereinafter be described. The means for accomplishing this is shown in Figs. 4 and 6. This actuating means includes a collar 85 fixed to the rod 24 between the brackets 27 and 71 and pivotally connected at 86 to one end of a link 87. The other end of the link 87 is pivotally connected at 88 to the upper end of a lever 89, the lower end of which is fixed to a shaft 90 while the latter is suitably journalled in a bearing portion of the yoke 16. A hand lever 91 (Fig. 4) is mounted upon the outer end of the shaft 90 for manual actuation of the shaft to bring about movement of the collar 85 in either direction.

The bracket 28, together with the mechanism associated therewith is similar in structure to the bracket 27 and its associated mechanism. The main difference existing in the fact that the bracket 28 is fixedly mounted upon its respective supporting rods 21 and 23 by a suitable means indicated at 95. Furthermore, the central bearing portion 96 of the bracket 28 movably receives the actuating rod 24 to serve as a support for the rod but not to be actuated thereby.

An air cylinder 97 has a head portion 98 connected to the bracket 28, the latter supporting the entire cylinder and being apertured at 99 for a reduced portion 100 of the head 98. A piston rod 101 of a piston (not shown) disposed in the air cylinder is movable in an air tight packing 102 and has a transverse member 103 fixed to the outer end thereof. The piston of this cylinder is moved in both directions through the force of air under pressure applied, at selected intervals to both sides of the piston. The transverse member 103 is operatively connected to spaced levers 104 through the aid of links 105. The levers 104 are identical in structure to the levers 44 and are pivotally supported upon a shaft 106, the ends of which are journalled in bearing portions 107 of the bracket 28. An angle member 109 is mounted upon the upper ends of the levers 104 and upon this member, a comb 110 is mounted. The comb 110 is identical in structure to the comb 50 but

with the pins 111 thereof curved in the opposite direction to the pins 51.

The angle member 109 also supports a cable clamp, indicated generally at 112, which is identical in structure to the cable clamp 53 with the exception of its position relative to its comb 110. By viewing Fig. 2, it will be noted that the cable clamp or clamping unit 53 is positioned to clamp a cable portion and hold it in alignment with the comb 50, while the cable clamp 112 is disposed at an angle with respect to the comb 110 to thus support its respective cable portion at a given angle relative to its comb. The purpose of mounting the clamping units 53 and 113 in this manner is to produce cable formed portions which, when placed adjacent each other, will occupy a space substantially the size and contour of the sheathed portions of the cable as illustrated in Fig. 11. Other advantages of this structure will be hereinafter described. Otherwise the cable clamp 112 is provided with a stationary jaw 114, a movable jaw 115, a bracket 116 adjustable relative to the stationary jaw for pivotally supporting at 117 the movable jaw at desired varied positions relative to its companion or fixed jaw. The movable jaw is also actuated through the aid of a lever 119 which is identical in structure to the lever 61, attention being further directed to Fig. 5.

A stripping unit 125 is provided for use in combination with the comb 110 and is similar in structure to the stripping unit 70, the main difference being that the stripping unit 125 is mounted at an angle with respect to its comb 110 while the stripping unit 70 lies parallel with its comb 50. The purpose of this arrangement is to produce stripped end conductors terminating in a given plane when in assembly (Fig. 11). The unit 125 includes a supporting bracket 126 mounted upon the supporting rods 21 and 23 and extending over the actuating rod 24. Mounting screws 127 in threaded apertures of the supporting bracket 126 are disposed at diagonal positions with respect to the bracket to serve in securing an angle member 128 at a desired position with respect to the comb 110. This adjustment in the mounting of the angle member 128 on the supporting bracket 126 is enhanced through the aid of elongate apertures 129 in the ends of the angle member to receive the screws 127. A series of stripping elements 130 is mounted upon the angle member 128 providing pairs of stripping elements to function in cooperation with their respective pins 111 of the comb 110.

The cutting unit 80 includes a movable support 135 extending between the rods 76 and 77. One end of the support 135 is grooved at 136 (Fig. 9) to receive the rod 77, that is, the portion of the rod provided with parallel flat surfaces 137. The end of the support 135 is thus mounted upon the rod 77, for the necessary movement of support relative to the rod, to shift the cutting unit 80 from one operating position to another. The movable support 135 also carries a pin 138 for pivotally supporting an arm 139. Adjacent the pivot 138, a weight carrying member 140 is secured to the arm 139 and carries a weight 141 (Fig. 1). A knife 143, extending longitudinally of the arm 139, is secured thereto and is provided with a cutting edge 144. The free end of the arm 139 has an integral handle 145 (Fig. 2) through the aid of which the knife 144 may be moved into and out of cutting position. A cutting element 148, to serve in cooperation with the knife 143, extends longitudinally of the movable support 135, is mounted thereon and has parallel grooves 149 in the upper surface thereof, V-shaped in cross-section, to receive the wires or conductors to hold them against lateral movement during the cutting operations.

The end of the movable support 135 adjacent the supporting rod 76 is formed into the contour of a yoke 152 to straddle an actuating member 153 and to be pivotally connected to the member by a pin 154 extending through apertures in the legs of the yoke and the actuating member. The actuating member 153 is slidably mounted upon the rod 76 and has a handle portion 155 for use in moving the cutting unit from one position to another.

Upon considering now the operation of the apparatus, to condition the apparatus for use, the hand lever 91 (Fig. 4) is moved clockwise to rotate the shaft 90 (Figs. 4 and 6) to move the lever 89 and the link 87, to move the rod 24 to the right, moving with it, the comb 50 and the stripping unit 70.

The apparatus is now in readiness to receive the cable which is to be formed thereon. This cable in the present instance, is composed of twenty groups of three conductors, insulated throughout their lengths and covered for desired portions of their lengths, with a suitable sheath of insulating material. The original cable is, at intervals throughout the length thereof, free of the insulating sheath or given lengths of the sheath are removed therefrom as the case may be. The cable portions adjacent the ends of one of the unsheathed portions of the cable are secured in the position shown in Fig. 7 by the clamps 53 and 112. At this time, the arm 139 and its blade 144 of the cutting unit 80, are in their normal open position as shown in Fig. 1 and the loose conductors extend at this time in undirected paths between the cable portions which are held by the clamps 53 and 112.

The operator then selects the first group of three conductors according to their respective call code, which may be determined by the different colors of the insulating material on the conductors in each group. In reality, there may be one common color, for example, white, for one of the conductors of each group, while the other two conductors of each group have different color combinations, differing from each other and from the remaining conductors of the other groups, so that the operator, in knowing the arrangement of these code combinations may readily select the proper wires for each group and string them through the various parts of the apparatus to assure connecting of the proper jacks for the call lines of each switchboard unit. During the forming of the cable, which has been described as being of the flat type, the conductors of which the cable is formed, are disposed in relative positions so that these code combinations may be readily selected in their given order.

By again viewing Fig. 7, it will be noted that the topmost group of conductors may be readily selected and passed around the right side of the first pin at the extreme left end of the comb 50 and directed in their parallel arrangement around the left side of the first pin at the extreme left of the comb 110. After this has been accomplished with the first group of conductors, the conductors of this group may be forced downwardly into the first stripping position of each of the stripping units 70 and 125. The operator may then continue with the second set of conductors and so on until the entire twenty sets of conductors have been threaded about the pins

of the comb 50 and about the pins of the comb 110, and later forced into their respective stripping members of the units 70 and 125. At this time, the operator again actuates the lever 91, but this time in a counterclockwise direction to force the rod 24 (Fig. 6) to the left and, with it, the comb 50 and its actuating mechanism, as well as the stripping unit 70. The purpose of moving the comb 50 and the stripping unit 70 inwardly, or to the right (Fig. 6), is to enable the operator to freely thread the groups of conductors about the pins of the combs 50 and 110 allowing sufficient slack in the conductors for this purpose. The returning of the comb 50 and the stripping unit 70 to the left, removes the slack from the conductors and draws them taut about the respective pins. Following this procedure, the operator may sew and tie those portions of the conductors extending from the clamped cable portions to their respective combs 50 and 110.

The next step of the operation of the apparatus includes the actuation of the cutting unit successively in two positions respectively parallel with the stripping units 125 and 70. In the present illustration, as shown in Fig. 7, the cutting unit is located with the movable support 135 parallel with and engaging the adjacent surface of the stripping unit 125. While in this position, the operator may move the arm 139 about its pivot 138 to move the knife 143 so that the cutting edge 144 thereof, through the cooperation of the cutting element 148, will cut the groups of conductors at this position. The operator then, by gripping the handle 155, moves the cutting unit 80 to a position parallel with the stripping unit 70 so that the movable support 135 will engage the adjacent surface of the unit 70 as illustrated in dot and dash lines in Fig. 7. It is understood that during the movement of the cutting unit, from one position to another, the arm 139 will be in its normal or open position and, after the completion of the movement, this arm may be moved downwardly about its pivot to complete another cutting operation of the conductors. During these cutting operations, the conductors are held in their groups by the stripping units 70 and 125 and are further held against lateral movement by the serrated or grooved element 148.

The next portion of the operation of the apparatus includes the operation of a valve 165 (Fig. 1) to control the flow of a fluid, such as air under pressure, from a supply line 166 through either or both feed lines 167 or 168 which extend respectively to their air cylinders 34 and 97. If desired, the valve 165, through the movement of the handle 170, may open the feed lines to the supply line either simultaneously or in a given order to cause simultaneous operation of their respective air cylinders or operation thereof at different time intervals. Operation of the air cylinders will cause movement of their respective combs 50 and 110 outwardly, as illustrated in F.g. 8 from the solid line position to the dot and dash line position, to draw the end portions of the various groups of conductors through their stripping units to cause stripping of the insulation from all of these portions of the conductors.

In review, attention is directed to Fig. 7 which clearly illustrates how the conductors of an unsheathed portion of the cable 60 have been positioned around the teeth of the combs in given groups extended through their stripping units. The top portion of the cable in Fig. 7 extends

at an angle in order that the tied portion or group of conductors may have one edge parallel with the adjacent edge of the sheathed cable portion, the other edge from which the groups of conductors extend lying in a plane at an angle with respect to the opposite edge or side of the sheathed cable portion. Furthermore, the portion of the cable held by the clamp 53 produces a group of conductors tied together to form a portion with the edge adjacent the loose conductor ends lying in a plane parallel with the adjacent edge of the sheathed portion of the cable, while the opposing edge of this portion extends diagonally, or at an angle, from its respective edge of the sheathed cable portion. These two portions or groups of conductors tied together in the manner illustrated in Fig. 7, when separated from each other after the cutting and stripping operations, may be positioned with respect to each other as shown in Fig. 11 to produce a combined structure, the combined width and thickness of which is substantially equal to those of the sheathed portions of the cable. The conductors of these cable portions are cut at different angular positions, whereby, when positioned as illustrated in Fig. 11, the stripped ends of the conductors will terminate in a plane parallel with the main cable portions. As an example, let it be assumed that the cable unit extending downwardly in Fig. 11, is placed on a table with the loose conductors extending to the right and terminating in a plane parallel with the left side of this cable unit and the tied conductor portion. Now let it be assumed that the other cable unit extending upwardly from the bottom of Fig. 11 is positioned as shown with the major part of the tied conductor portion thereof resting on the free conductors of the other cable unit. When in this position, the groups of loose conductors of the upwardly extending cable unit will rest upon and be parallel with their respective groups of loose conductors of the downwardly extending cable unit. It will now be observed that the topmost groups of loose conductors (toward the top of Fig. 11), of both cable units are substantially equal and terminate in the aforementioned plane. However, as the tied portion of the upwardly extending cable portion becomes wider nearer the sheathed portion thereof and as the adjacent side of the tied portion of the downwardly extending cable unit extends diagonally away from the said plane to allow for the tied conductor portion of the other cable unit, the loose conductors of the downwardly extending cable unit must be of increasingly greater length to terminate in the said plane. Therefore, the conductors of the downwardly extending cable unit are cut at an angle relative to their comb 110 (Fig. 7).

The details of the clamping unit 53 are specifically defined and in order to avoid unnecessary description regarding the clamping unit 112, this unit has been described as being substantially identical in structure to the unit 53. The rounded portion of the handle 61 is pivotally connected eccentrically to the lever-like portion of the jaw 56, and when rotated clockwise relative to the roller 63, this rounded portion of the handle will function as a cam to force the jaw 56 about its pivot 64 toward the fixed jaw 54 of the clamping unit. When the handle 61 is rotated counterclockwise about its pivot 62, the distance between the pivot 62 and the roller 63 decreases allowing the jaw 56 to move clockwise about its pivot 64 opening the clamp to receive a cable portion.

When the lever 61 is rotated clockwise about its pivot 62, the circular portion of the lever adjacent the pivot 62 will force its way between the roller 63 and the pivot 62, acting as a cam to force the jaw 56, counterclockwise about its pivot 62, into clamping engagement with the cable. The part 63 is made in the form of a roller to minimize the frictional resistance of the lever therewith. Furthermore, the portion of the lever between the roller 63 and the pivot 62 acts as a wedge to hold the clamping unit closed. The same condition exists with regard to the clamping unit 112. Its lever 119 is identical with the lever 61, and is movable about a pivot connecting it to the movable jaw 115, relative to a roller identical with the roller 63 to bring about opening and closing of the jaw 115, or in other words, movement of the jaw 115 into and out of gripping engagement with the cable.

The cable units are then completed, that is, these particular ends thereof have been completed so that they may be positioned with respect to each other to connect like jacks of a given jack strip to the same type of jack strips of adjacent switchboard units. In placing the formed cable portions with respect to each other, as shown in Fig. 11, the lower tapered side of the cable portion shown adjacent the comb 50 will be turned 180° about the centerline of this cable portion so that the combined space required for these portions will be substantially the same as that required for the sheathed portions of the cables. Furthermore, by so positioning these cable portions with respect to each other, their respective and like conductor groups are disposed adjacent and in parallel relation with each other. Another advantage over the former methods of forming cables of this type lies in the minimizing of the waste of materials. Furthermore, by cutting the conductors as previously described, the remaining lengths of the groups of conductors will be equal when the cable portions are positioned with respect to each other as previously described.

Although specific improvements of the invention have been shown and described, it will be understood that they are but illustrative and that various modifications may be made therein without departing from the scope and spirit of this invention as defined by the appended claims.

What is claimed is:

1. A cable forming apparatus comprising clamps for holding sheathed portions of a cable at out-of-line positions adjacent intermediate unsheathed insulated conductors of the cable, combs adjacent the clamps cooperating to space the conductors given distances apart, and means actuatable to cut the conductors at given positions between the combs.

2. A cable forming apparatus comprising clamps for holding sheathed portions of a cable at out-of-line postions adjacent intermediate unsheathed insulated conductors of the cable, combs adjacent the clamps cooperating to space the conductors given distances apart, a cutting unit disposed between the combs and actuable to cut the conductors, and means to support the cutting unit for movement thereof into predetermined positions relative to the combs.

3. A cable forming apparatus comprising clamps for holding sheathed portions of a cable at out-of-line positions adjacent intermediate unsheathed insulated conductors of the cable, combs adjacent the clamps cooperating to space the conductors given distances apart, and a cutting unit disposed between the combs to cut the conductors, and having means to hold the conductors against lateral movement while they are being cut.

4. A cable forming apparatus comprising clamps for holding sheathed portions of a cable at out-of-line positions adjacent intermediate unsheathed insulated conductors of the cable, combs adjacent the clamps cooperating to space the conductors given distances apart, and a cutting unit disposed between the combs and having relatively movable cutting elements to cut the conductors, one of the elements having a serrated surface to hold the conductors against lateral movement while they are being cut.

5. A cable forming apparatus comprising combs having parallel rows of spaced pins, a clamp mounted adjacent one of the combs to hold a sheathed portion of a cable adjacent an intermediate unsheathed group of insulated conductors thereof, with one side of the said sheathed cable portion in alignment with the pins of the said combs, a clamp mounted adjacent the other comb to hold the other sheathed portion, beyond the unsheathed insulated conductors, at a given angle with respect to its combs, aligned pins of the combs serving to space the insulated conductors, and means actuable to cut the conductors at given positions between the combs.

6. A cable forming apparatus comprising clamps for holding sheathed portions of a cable at out-of-line positions adjacent intermediate unsheathed insulated conductors of the cable, combs adjacent the clamps cooperating to space the conductors given distances apart, stripping elements to receive the insulated conductors from their respective combs, means to support the combs, and their respective clamps, for movement relative to each other, means actuable to cut the conductors at given positions between the combs, and means to cause movement of the combs and their respective clamps to move predetermined lengths of the conductors through their stripping elements to cause stripping of the insulation therefrom.

7. A cable forming apparatus comprising clamps for holding sheathed portions of a cable at out-of-line positions adjacent intermediate unsheathed insulated conductors of the cable, combs adjacent the clamps cooperating to space the conductors given distances apart, stripping elements to receive the insulated conductors from their respective combs, means to support the combs, and their respective clamps, for movement relative to each other, means actuable to cut the conductors at given positions between the combs, and fluid operated means to move the combs and their respective clamps relative to their respective stripping elements to move predetermined lengths of the conductors through their stripping elements to cause stripping of the insulation from the said portions.

8. A cable forming apparatus comprising clamps for holding sheathed portions of a cable at out-of-line positions adjacent intermediate unsheathed insulated conductors of the cable, combs adjacent the clamps cooperating to space the conductors given distances apart, spaced supports having their respective clamps and combs fixedly mounted thereon, stripping elements to receive the insulated conductors from their respective combs for stripping insulation from the conductors, means actuable to cut the conductors at given positions between the stripping elements, and fluid operable means to cause relative move-

ment of the supports, with their combs, clamps and cable portions, with respect to their stripping elements to cause the stripping elements to strip the insulation from predetermined lengths of the conductors adjacent their cut ends.

9. A cable forming apparatus comprising clamps for holding sheathed portions of a cable at out-of-line positions adjacent intermediate unsheathed insulated conductors of the cable, combs adjacent the clamps cooperating to space the conductors given distances apart, spaced supports having their respective clamps and combs fixedly mounted thereon, means operable to cause movement of one of the supports, with its clamp, the cable portion held thereby and its comb relative to the other support, clamp cable portion and comb to draw the conductors taut therebetween, and means interposed between the combs actuable to cut the conductors at given positions between the combs.

10. A cable forming apparatus comprising clamps for holding sheathed portions of a cable at out-of-line positions adjacent intermediate unsheathed insulated conductors of the cable, combs adjacent the clamps cooperating to space the conductors given distances apart, spaced supports having their respective clamps and combs fixedly mounted thereon, stripping elements disposed between the combs to receive the insulated conductors from their respective combs, a cutting unit disposed between the stripping elements to cut the conductors intermediate the stripping elements, and means operable to move the support, with their clamps, the cable portions held thereby and their combs, relative to each other and their stripping elements to cause the stripping elements to strip portions of the insulation from the cut ends of the conductors.

11. A cable forming apparatus comprising clamps for holding sheathed portions of a cable at out-of-line positions adjacent intermediate unsheathed insulated conductors of the cable, combs adjacent the clamps cooperating to space the conductors given distances apart, spaced supports having their respective clamps and combs fixedly mounted thereon, stripping elements mounted at an angle with respect to each other disposed between the combs to receive the insulated conductors from their respective combs, a cutting unit interposed between the stripping elements and successively movable into parallel relation therewith to cut the conductors in planes parallel with the stripping elements, and means operable to move the support, with their clamps, the cable portions held thereby and their combs, relative to each other and their stripping elements to cause the stripping elements to strip portions of the insulation from the cut ends of the conductors.

12. A cable forming apparatus comprising clamps for holding sheathed portions of a cable at out-of-line positions adjacent intermediate unsheathed insulated conductors of the cable, combs adjacent the clamps cooperating to space groups of conductors given distances apart, spaced supports having their respective clamps and combs fixedly mounted thereon, stripping elements each composed of a series of pairs of stripping blades to receive the groups of insulated conductors from their respective combs in stacked formation between their respective pairs of stripping blades, means actuable to cut the conductors at given positions between the stripping elements, and means operable to move the supports, with their clamps, the cable portions held thereby and the combs, relative to each other and their stripping elements to cause the stripping blades thereof to simultaneously strip the insulation from predetermined lengths of the ends of the groups of conductors.

13. A cable forming apparatus comprising clamps for holding sheathed portions of a cable at out-of-line positions adjacent intermediate unsheathed insulated conductors of the cable, combs adjacent the clamps cooperating to space groups of conductors given distances apart, spaced supports having their respective clamps and combs fixedly mounted thereon, stripping elements each composed of a series of pairs of stripping blades to receive the groups of insulated conductors from their respective combs in stacked formation between their respective pairs of stripping blades, means operable to cause movement of one of the supports, with its clamp, the cable portion held thereby and its comb relative to the other support, clamp, cable portion and comb to draw the conductors taut therebetween, means actuable to cut the groups of conductors at given positions between the stripping elements, and means operable to move the supports, with their clamps, the cable portions held thereby and the combs, relative to each other and their stripping elements to strip portions of the insulation from the cut ends of the conductors.

ARTHUR M. ISAACSON.
HARRY H. MERWIN.

REFERENCES CITED

The following references are of record in the file of this patent:

UNITED STATES PATENTS

Number	Name	Date
1,626,119	Olin	Apr. 26, 1927
1,733,294	Cross	Oct. 29, 1929
1,734,745	Ray	Nov. 5, 1929
1,753,561	Emmert	Apr. 8, 1930
1,882,947	Rotherham	Oct. 18, 1932