3 Sheets—Sheet 1.

B. C. STEVENS.

Machine for Making the Shanks of Knitting-Machine Needles.

No. 221,002. **Patented Oct. 28, 1879.**

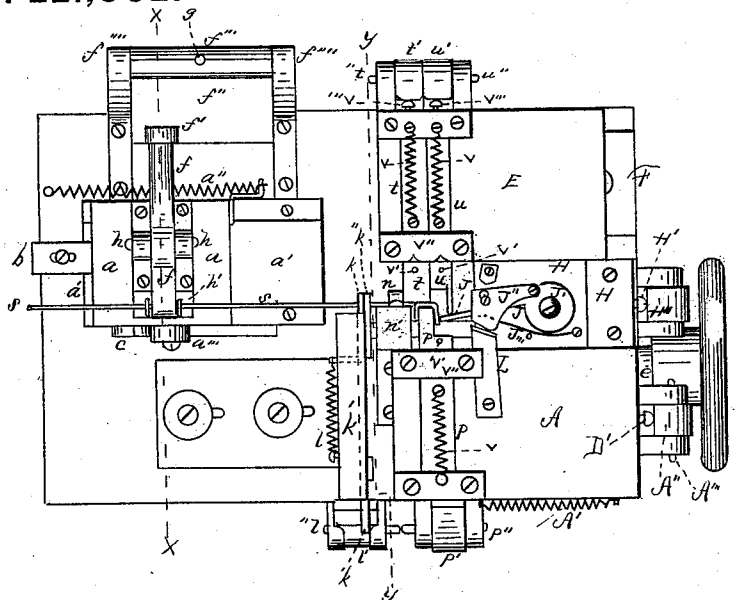

Fig. 1.

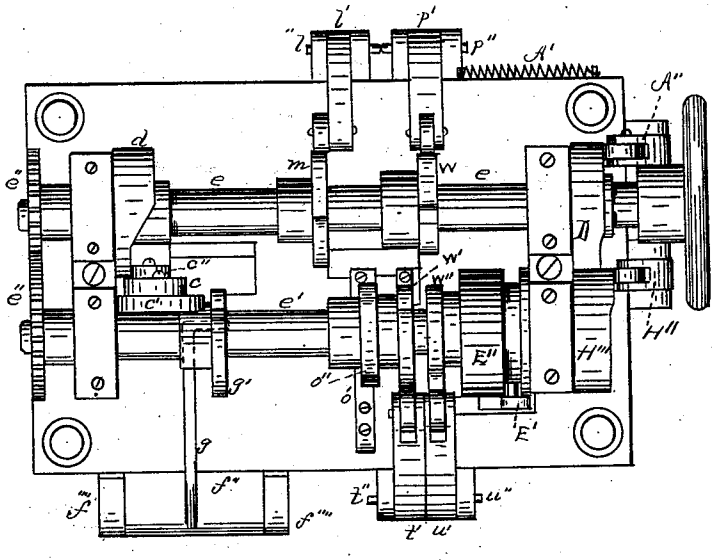

Fig. 2.

WITNESSES
John E. Fanning
Jas. H. Kirkpatrick

Benjamin C. Stevens INVENTOR.
By his Atty.
Henry W. Williams

N. PETERS, PHOTO-LITHOGRAPHER, WASHINGTON, D. C.

3 Sheets—Sheet 2.

B. C. STEVENS.

Machine for Making the Shanks of Knitting-Machine Needles.

No. 221,002. **Patented Oct. 28, 1879.**

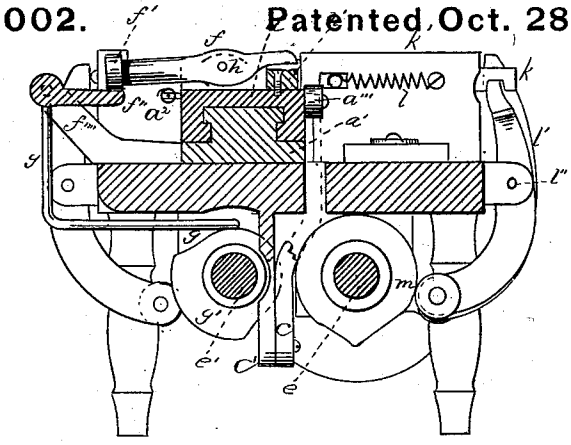

Fig. 3.

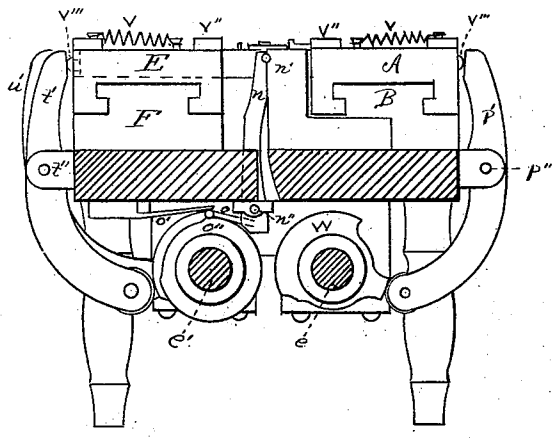

Fig. 4

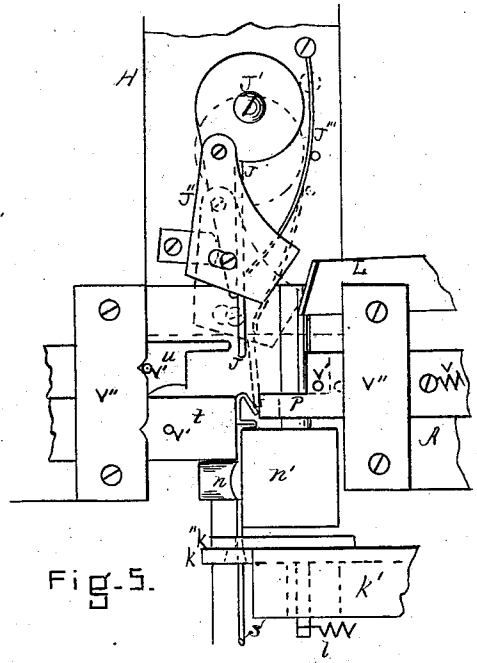

Fig. 5.

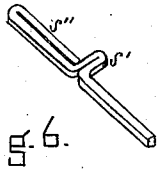

Fig. 6.



Fig. 7.

WITNESSES

John E. Fleming.

Jas. A. Reed Jr.

INVENTOR

Benjamin C. Stevens

By his Atty.

Henry W. Williams

N. PETERS, PHOTO-LITHOGRAPHER, WASHINGTON, D. C.

3 Sheets—Sheet 3.

B. C. STEVENS.

Machine for Making the Shanks of Knitting-Machine Needles.

No. 221,002. Patented Oct. 28, 1879.

Fig. 7.

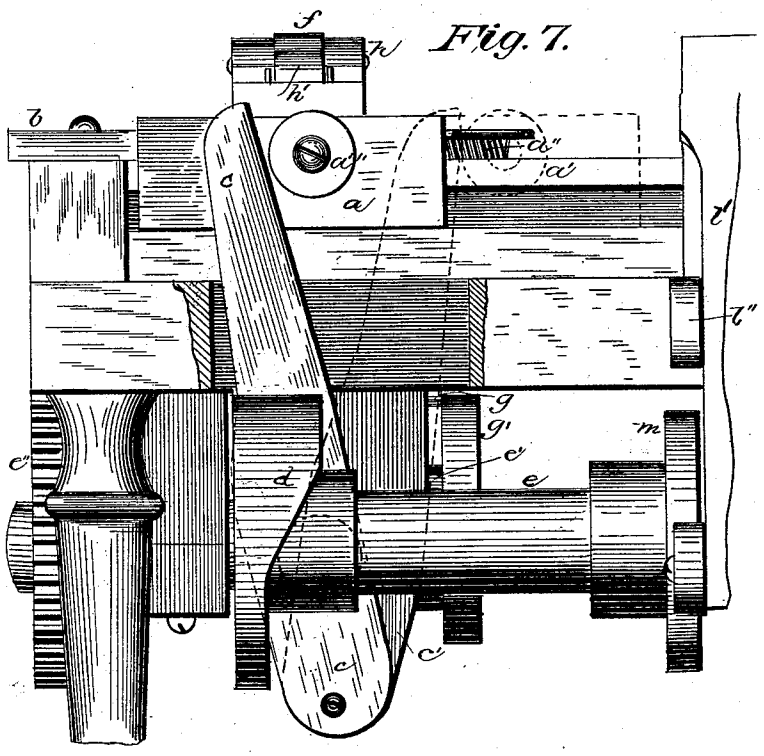

Fig. 8.

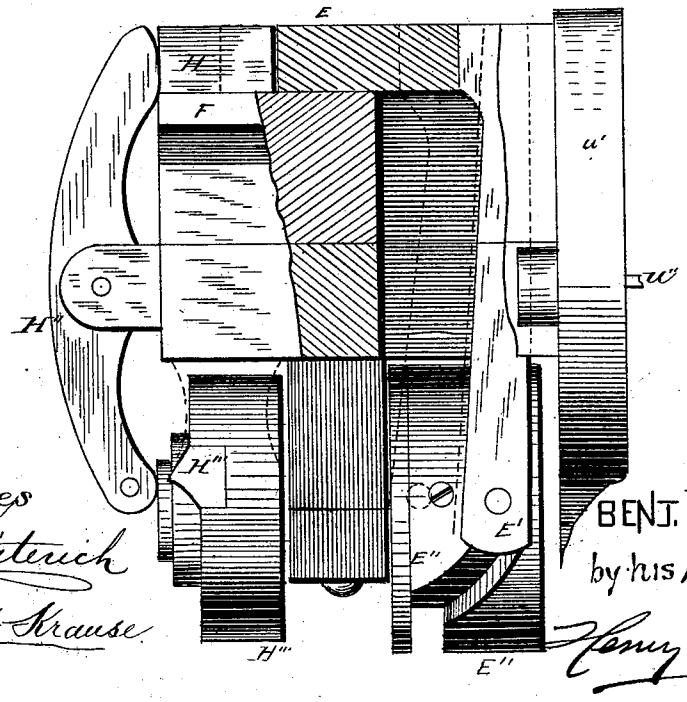

Witnesses
Fred G. Dieterich
Albert H. Krause

Inventor:
BENJ. C. STEVENS.
by his Attorney,
Henry W. Williams

N. PETERS, PHOTO-LITHOGRAPHER, WASHINGTON, D. C.

UNITED STATES PATENT OFFICE.

BENJAMIN C. STEVENS, OF FRANKLIN, NEW HAMPSHIRE, ASSIGNOR TO JACKMAN & FLANDERS, OF SAME PLACE.

IMPROVEMENT IN MACHINES FOR MAKING THE SHANKS OF KNITTING-MACHINE NEEDLES.

Specification forming part of Letters Patent No. **221,002**, dated October 28, 1879; application filed July 3, 1879.

To all whom it may concern:

Be it known that I, BENJAMIN C. STEVENS, of Franklin, in the county of Merrimack and State of New Hampshire, have invented a new and Improved Machine for Making Shanks of Knitting-Machine Needles, of which the following is a specification.

In the accompanying drawings, in which similar letters of reference indicate like parts, Figure 1 is a plan of my improved machine. Fig. 2 is a plan of the under side thereof. Fig. 3 is a transverse vertical section on line *x x*, Fig. 1. Fig. 4 is a similar section on line *y y*, Fig. 1. Fig. 5 is an enlarged plan view of the parts which form the wire. Fig. 6 is a view of the shank of a knitting-machine needle formed by this machine and subsequently flattened. Fig. 7 is a side elevation, showing the mechanism for operating the feeder. Fig. 8 is a side elevation, showing the mechanism for operating the slide E.

The object of this machine is to form the two loops *s'* and *s''* in the shank, thus making a double shank or butt; or, if but one loop, *s'*, is formed, a single shank. This shank, with its loops or bows, is formed by one continuous operation of the machine, without transferring the wire to any other machine—a thing which, as far as I am aware, has not before been accomplished.

a is the feeder, for feeding in the wire *s*, which slides on the block *a'*, is held against the adjustable stop *b* by the spiral spring *a''*, secured to said feeder and to the table, and is moved forward upon the block *a'* by means of the lever *c*, said lever acting upon the wheel *a'''*, secured to the feeder. The lever *c* is pivoted to the projection *c'*, extending downward from the table, and is actuated by the cam *d*, fixed to the driving-shaft *e*, and pressing upon the wheel *c''*, secured to said lever *c*. The lever *c* impels the feeder toward the machine, and the spring *a''* retracts it as far as the stop *b* will allow. Secured to the feeder is a lever, *f*, which nips the wire in order to carry it to the machine. It is pivoted at *h*, and its front end nips the wire by pressure upon the bed *h'*. Its rear end is provided with a friction-wheel, *f'*, which rests upon a broad lever, *f''*, pivoted at *f'''*, and supported by the arms *f''''*. This lever *f''* is raised and lowered by means of the rod *g*, which passes down and rests upon a cam, *g'*, fixed to the shaft *e'*, which is connected with the driving-shaft *e* by gear-wheels *e'' e''*. The cam *g'*, raising the rod *g*, lifts the lever *f''*, and, by pressing down the nipper *f*, holds the wire.

The wire *s* passes through openings in the cutter *k* and stationary plate *k''*. The cutter *k* slides in the block *k'*. Its rear notched end catches upon the lever *l'*, which is pivoted at *l''*, and is acted upon by the cam *m* upon the shaft *e*. The lever *l'* therefore forces the cutter *k* by the plate *k''*, cutting the wire, and the spring *l*, secured to said cutter and the block *k'*, draws it back.

n is a lever which holds the wire while the shank is being formed. It is pivoted at *n''*, (see Fig. 4,) and is forced against the die *n'* by the cam *o''* upon the shaft *e'*. When released by the cam the spring *o'* holds it away from the die by pressing down the rod *o*, projecting from the lower end of said lever *n*.

p, *t*, and *u* are sliding dies, actuated, respectively, by the levers *p'*, *t'*, and *u'*, pivoted at *p''*, *t''*, and *u''*, such levers being respectively acted upon by the cams *w*, *w'*, and *w''*, the first fixed to shaft *e*, and the two last to shaft *e'*. Each of said dies *p t u* is held against its lever by a spring, *v*, is stopped at the proper point by a small post, *v'*, which strikes a bridge, *v''*, and is rendered adjustable by a set-screw, *v'''*. Lateral motion is imparted to the die *p* by means of the sliding block A, which supports said die, and which slides on the block B. The spring A' presses the sliding block A against the lever A'', which is pivoted at A''', and is actuated by the cam D upon the shaft *e*. D' is the regulating-screw. The sliding block E, supporting the dies *t u*, imparts lateral motion to them by sliding on the block F, said block being actuated by the lever E', which passes down through the table and is operated upon by the cam E''. As the block or carriage E slides, the die *u* is acted on alternately by the levers *t'* and *u'*.

H is a sliding carriage, placed between the blocks A and E, and acted upon by the lever H'', actuated by the cam H''' upon the shaft *e'*. H' is the adjusting-screw. A suitably-

arranged spring retracts the carriage when released by the actuating mechanism. This carriage H supports the lever J, which is pivoted at J′, is provided with an adjustable plate, J″, which presses against the corresponding plate L, secured to block A, and is acted upon by the spring J‴.

Fig. 7ˣ is a view of the end of this lever, and shows a notch and recess, R, in the notch portion of which the wire rests while being bent, and in the recess portion (in the side of the lever) of which the end of the wire catches while the last loop is being formed.

The operation of the machine is as follows: The wire having been placed in the machine under the nipper *f*, and the machine set in motion, the cam *g′*, by means of the rod *g*, elevates the lever *f″*, and causes the nipper *f* to clutch the wire *s*. The feeder *a* (adjusted to feed the desired length of wire) carries the wire forward (said feeder being operated by means of lever *c* and cam *d*) through the cutter *k* and plate *k″*, between the lever *n* and die *n′*, and beyond the die *t*. The lever *n*, operated by means of lever *o* and cam *o″*, moves toward the die *n′*, and holds the wire. The die *u* moves laterally, it being caused so to do by the sliding block E, lever E′, and cam E″, until it reaches the space between dies *n′* and *p*, when, pressed forward by lever *t′* and cam *w′*, it forces the wire between the dies *n′* and *p*, forming a bow or loop, which is closed by a lateral movement given to die *p* by block A and cam D, and presents the appearance shown in Figs. 1 and 5, and by *s′*, Fig. 6, the bow or loop *s′* being at the end of the wire, thus forming a single shank. In case a double shank is desired, as seen in Fig. 6, the wire is originally fed a sufficient distance farther into the machine, so that after the above-described operation there remains sufficient wire beyond the bow or loop *s′* to make the loop *s″*, the wire reaching beyond the end of the lever J.

The above operation having been completed, the lever J, pushed by the die *u*, bends the wire around the end of die *p* by a semicircular swinging movement, as shown in Fig. 1. The die *p* then recedes and allows the lever J to continue its forward motion to form the bow, the end of the wire meanwhile being caught and held in the notch or recess R in the lever J, as shown by broken lines in Fig. 5. The lever J recedes, and the bow is closed by a forward movement of the die *p*, as shown in Fig. 5, thus forming the bow or loop *s″*. The dies and lever are of course operated by their respective cams and levers, above specified. The wire is then cut by a forward movement of the cutter *k*, impelled by the cam *m*, and the double shank is completed, and, when pressed, appears as shown in Fig. 6. The notch R in the lever J during the above described operation, materially assists in holding the wire, keeping it from slipping either up or down.

Thus it will be seen that without removal or transfer of the wire, this machine performs in a continuous manner the entire operation of making either a single or double shank to the needle.

It is evident that this shape can be applied to wire wherever it is required, whether for a knitting-machine needle or not. I propose, therefore, to use my machine for bending wire of any kind into the shape shown.

Having thus fully described my invention, what I claim, and desire to secure by Letters Patent, is—

1. The combination of the nipper *f*, provided with the friction-wheel *f′*, the broad lever *f″*, pivoted at *f‴*, and of sufficient breadth to allow of the traverse of the nipper-arms *f⁗*, rod *g*, and cam *g′*, substantially as and for the purpose set forth.

2. The combination of the dies *n′ p t u* and lever J, operated by means of mechanism substantially as set forth, to form the double shank *s′ s″* described.

3. The combination of the die *u*, levers *t′ w′*, sliding carriage E, lever E′, and suitable cams W′ W″ E″, arranged as hereinbefore specified, for the purpose of imparting suitable longitudinal and lateral motion to said die *u*, as set forth.

4. The combination of the die *p*, lever *p′*, and cam *w* with the sliding carriage A, lever A″, cam D, and spring A′, substantially as and for the purpose described.

5. In combination with the lever J, the adjustable plate J″, of substantially the shape shown, and the corresponding stop-plate L, arranged and constructed substantially as and for the purpose set forth.

6. The combination of the lever J, plates J″ L, and spring J‴ with the sliding carriage H, actuated by the lever H″ and cam H‴, for the purpose of imparting motion to said lever J, substantially as described.

7. The combination of the feeder carrying the nipper *f* and operated by means of lever *c*, the dies *n′ p t u*, sliding carriages A E H, lever J, provided with plate J″, and cutter *k*, sliding in block *k′*, all arranged, constructed, and operated substantially as and for the purpose hereinbefore set forth.

8. The lever J, provided with the notch and recess R, such notch and recess being cut in the end of said lever, and extending back upon one side thereof, for the purpose of guiding the wire and catching its end when the loop is formed, in combination with dies for forming such loops, substantially as set forth.

BENJAMIN C. STEVENS.

Witnesses:

DANIEL BARNARD,

W. E. ROGERS.