June 26, 1956 L. E. STAAK 2,752,463

SWITCH

Filed Feb. 3, 1955

Fig. 1.

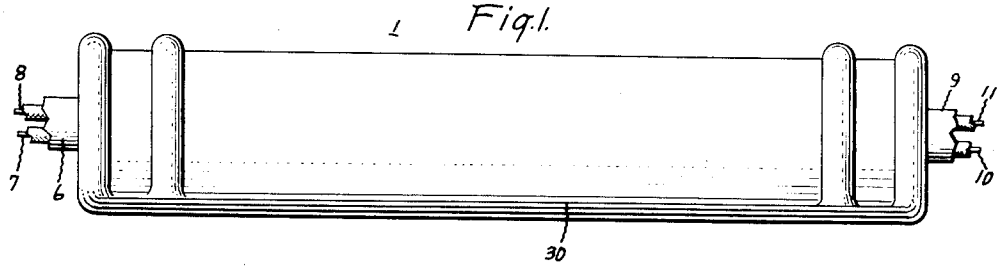

Fig. 2.

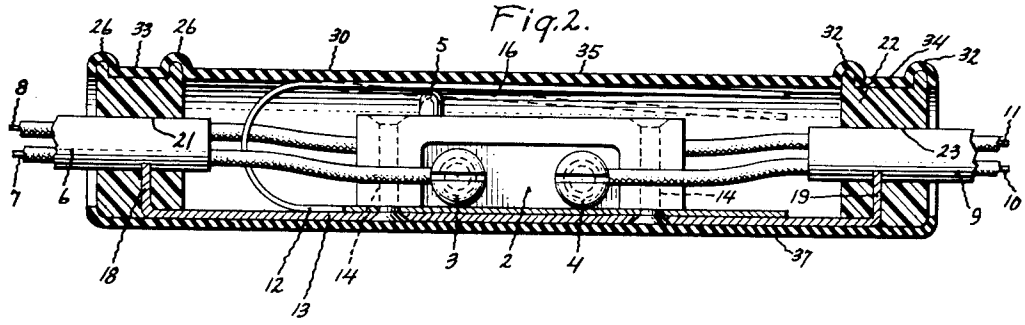

Fig. 3.

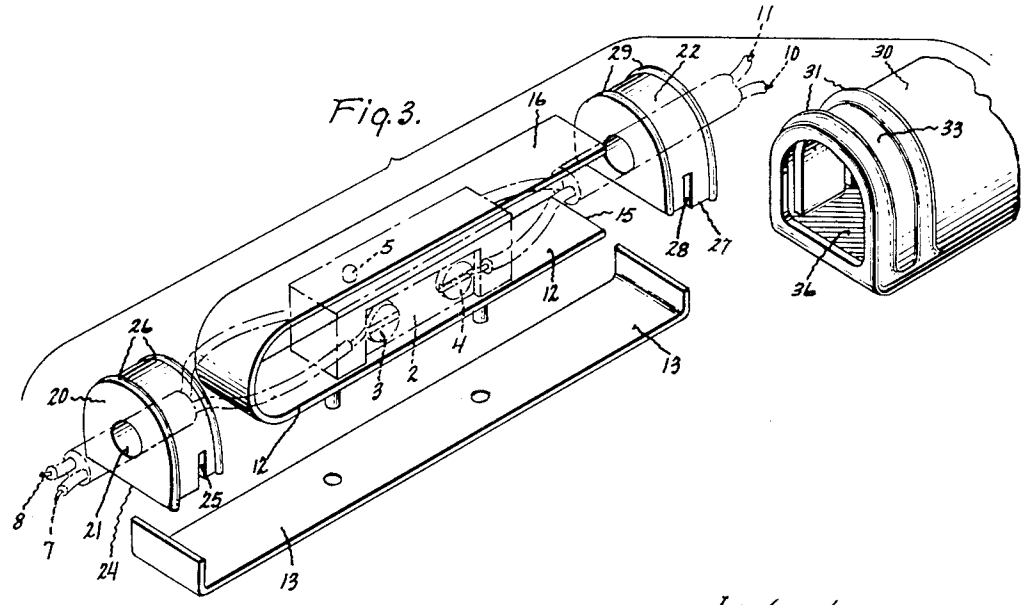

Inventor:
Louis E. Staak,
by Robert G. Sprung
His Attorney.

United States Patent Office 2,752,463 Patented June 26, 1956

2,752,463

SWITCH

Louis E. Staak, Fort Wayne, Ind., assignor to General Electric Company, a corporation of New York

Application February 3, 1955, Serial No. 485,880

7 Claims. (Cl. 200—168)

This invention relates to electric switches, and more particularly to a manually operable switch.

There are many applications for electrically actuated apparatus where it is important that the apparatus remain in operation only so long as it is being directly controlled by an operator. In such cases, it will be recognized that it is desirable to provide a switch to control the actuation of the apparatus which will remain closed only so long as the operator is physically present to maintain it in that position. An important, but not exclusive, example of such a situation is in the field of electrically powered lawn mowers. It is further desirable that any switch manufactured in connection with such apparatus should be so constructed as to be readily attachable to the apparatus with a minimum of difficulty in a position where the operator can control the operation by actuation of the switch without requiring any conscious effort in addition to control of the apparatus. In addition to the features set forth above, such a switch should be simple, have a relatively small number of elements, and be economical to manufacture. Where the switch is used in particular applications, such as in connection with a lawn mower as stated above, it is desirable that the switch be protected against the elements, particularly insofar as moisture is concerned.

It is, therefore, an object of this invention to provide an improved electric switch incorporating the advantageous features set forth above.

Further objects and advantages of this invention will become apparent and the invention will be better understood by reference to the following description and the accompanying drawing, and the features of novelty which characterize this invention will be pointed out with particularity in the claims annexed to and forming a part of this specification.

In its broadest aspect, this invention provides an electric switch wherein a switch mechanism is provided with a movable member which is adapted to close an electric circuit when maintained in a predetermined position. The mechanism is mounted upon an elongated base member which is arranged to extend beyond the mechanism on each side thereof. Also secured to the base member are means which are arranged adjacent the movable member so that movement of the means will cause the member to move to the predetermined position. On each side of the mechanism and secured to the base member there is a closure member, and a flexible hollow member is arranged to be mounted over the closure members so as substantially to enclose the switching mechanism. The hollow member is so arranged that it is adjacent at least a portion of the movable member; by this arrangement, the movable member may be moved to its predetermined position to close the circuit by an external force acting through the hollow member on the movable member.

In the drawing,

Figure 1 is a side view of the improved switch;

Figure 2 is a similar view in cross section of the switch; and

Figure 3 is an exploded view in perspective of the improved switch.

Referring now to the figures of the drawing, there is shown an electric switch generally indicated at 1 which includes a standard snap-acting switching mechanism shown at 2. The switching mechanism 2 will generally include a pair of terminals such as 3 and 4 and an extending button 5 which closes a circuit (not shown) through the switching mechanism when it is depressed. A cable 6 contains a pair of conductors 7 and 8, with conductor 7 being secured to terminal 3. A similar cable 9 (which may in essence be a continuation of cable 6) contains a continuation 11 of conductor 8 and a conductor 10 which is secured to terminal 4. The internal operation of switching mechanism 2 to complete a circuit through conductors 7, 10, 11, and 8 may be any one of several well-known constructions and will not be further described herein.

A pair of members 12 and 13 are secured to the switching mechanism 2 by any desired means such as rivets 14. Member 12 is formed from spring material and is substantially U-shaped with legs 15 and 16. Leg 16 extends directly over button 5 so that when the leg is depressed to the position shown in dotted lines at 17 button 5 will also be depressed.

Member 13, which serves as a base for switching mechanism 2, is elongated and extends past the switching mechanism on each side. A pair of flanges 18 and 19 are formed respectively at each end of the base member 12. Flange 18 serves as a mounting for a closure member 20 which is preferably formed of resilient material and provided with an opening 21 substantially parallel to base member 13 to accommodate cable 6. A closure member 22 is similarly mounted on flange 19 and is provided with an opening 23 to accommodate cable 9. Flanges 18 and 19 extend respectively a short distance into openings 21 and 23 so as to secure cables 6 and 9 respectively. As will best be seen in Figure 3, closure member 20 is provided with a flat surface 24 and a slot 25 extending out of surface 24 to accommodate flange 18 of member 13. In addition, member 20 has a pair of peripheral ridges 26 (whose purpose will be explained below) which extend entirely around member 20 with the exception of flat surface 24.

A hollow member 30, preferably formed from a resilient material such as, for instance, a vinyl, has inner dimensions such that it will fit tightly over closure members 20 and 22. It may be arranged over the closure members by expanding the end portions of member 30, arranging it in place and then shrinking it to its previous size so that it engages closure members 20 and 22 as is best shown in Figure 2. The manner in which the member 30 molds itself over the parallel spaced ridges 26 of closure member 20 and 29 of closure member 22 insures a positive engagement of member 30 with the closure members.

The ridges 26 of closure member 20 are each in a plane substantially perpendicular to the longitudinal axis of the base member 13 so as to form between them a flat portion 33 for a purpose hereafter to be explained, and ridges 29 of closure member 22 are similarly located to form a similar flat portion 34. The central portion 35 of member 30 encloses the switching mechanism 2. Portion 16 of member 12 is adjacent the inner surface of part 35 of member 30, and it will be seen that when pressure is applied to this part directly over part 16 of member 12, it will be depressed to the position shown at 17 to actuate button 5 and close the circuit within switching mechanism 2.

Member 30 lies flat against base member 13 so as to provide a flat surface 37. To secure switch 1 in place, the flat surface may be arranged against a surface of the

apparatus to be controlled (not shown), and clamps (not shown) may then be placed over portions 33 and 34 respectively in order to secure the switch 1 to the apparatus. It will be seen that the ease of clamping and the provision of flat surface 37 will permit securement of switch 1 to a variety of types of apparatus while eliminating the difficulties previously encountered in utilizing a single type of switch for various types and designs of electrical apparatus.

When, for instance, switch 1 is clamped to the handle bar of a manually controlled electrically operated device, such as an electric lawn mower, the operator will normally place his hands over switch 1 when controlling the device and will, therefore, depress button 5 to cause operation of the lawn mower. As soon as the operator release his grip, the circuit will be opened since button 5 moves outwardly when the force on part 16 of member 12 is removed. Thus, actuation of the apparatus will cease as soon as the operator ceases to control it.

It will be understood that various modifications may be effected insofar as the precise shape of the parts and their location relative to each other is concerned without departing from the scope of the invention. Thus, while the invention has been explained by describing a particular embodiment thereof, it will be apparent that improvements and modifications may be made without departing from the scope of the invention as defined in the appended claims.

What I claim as new and desire to secure by Letters Patent of the United States is:

1. An electric switch comprising a switching mechanism having a movable member extending therefrom, said member being adapted to close an electric circuit upon maintenance of said member in a predetermined position, an elongated base member secured to said mechanism, means secured to said base member and arranged to be deflected to move said movable member to said predetermined position, a pair of closure members arranged respectively on each side of said mechanism and secured to said base member, each of said closure members having formed thereon a pair of spaced ridges thereby to provide a clamp seat therebetween, and a flexible hollow member arranged to be mounted over said closure members, said hollow member being secured to said closure members respectively by tight engagement with the outer surface thereof, said means having at least a portion thereof arranged adjacent said hollow member whereby said movable member may be moved to said predetermined position by an external force acting through said hollow member on said means.

2. An electric switch comprising a switching mechanism having a movable member extending therefrom, said member being adapted to close an electric circuit upon maintenance of said member in a predetermined position, an elongated base member secured to said mechanism and arranged to extend beyond said mechanism on each side thereof, said base member having a flange formed at each end thereof, means secured to said base member and arranged to be deflected to move said movable member to said predetermined position, a pair of closure members arranged respectively on each side of said mechanism and secured to said flanges respectively, and a flexible hollow member arranged to be mounted over said closure members, said means having at least a portion thereof arranged adjacent said hollow member whereby said movable member may be moved to said predetermined position by an external force acting through said hollow member on said means.

3. An electric switch comprising a switching mechanism having a movable member extending therefrom, said member being adapted to close an electric circuit upon maintenance of said member in a predetermined position, an elongated base member secured to said mechanism and arranged to extend beyond said mechanism on each side thereof, said base member having a flange formed at each end thereof, a resilient member secured at one end to said base member and having a portion arranged to be deflected to move said movable member to said predetermined position, a pair of closure members arranged respectively on each side of said mechanism and secured to said base member, each of said closure members having formed thereon a pair of parallel spaced ridges thereby to provide a clamp seat therebetween, and a flexible hollow member arranged to be mounted over said closure members, said hollow member being secured to said closure members respectively by tight engagement with the outer surface thereof, said portion of said resilient member being arranged adjacent said hollow member whereby said movable member may be moved to said predetermined positioned by an external force acting through said hollow member on said resilient member.

4. An electric switch comprising a switching mechanism having a movable member extending therefrom, said member being adapted to close an electric circuit upon maintenance of said member in a predetermined position, an elongated base member secured to said mechanism and arranged to extend beyond said mechanism on each side thereof, said base member having a flange formed at each end thereof, a resilient member secured at one end to said base member and having a portion arranged to be deflected to move said movable member to said predetermined position, a pair of closure members arranged respectively on each side of said mechanism and secured to said base member, each of said closure members having a pair of parallel ridges formed thereon, each of said ridges being formed in a plane substantially perpendicular to the axis of said base member whereby each of said pairs of ridges defines a clamp seat on the surface of one of said closure members, and a flexible hollow member arranged to be mounted over said closure members, said hollow member being secured to said closure members respectively by tight engagement with the outer surface thereof, said portion of said resilient member being arranged adjacent said hollow member whereby said movable member may be moved to said predetermined position by an external force acting through said hollow member on said resilient member.

5. An electric switch comprising a switching mechanism having a button extending from the top thereof, said button being normally biased to an outward position and being adapted to close an electric circuit when moved to an inner position, an elongated base member secured to said mechanism and arranged to extend beyond said mechanism on each side thereof, said base member having a flange formed at each end thereof, a resilient member secured at one end to said base member and having a portion arranged to be deflected to move said movable member to said predetermined position, a pair of closure members arranged respectively on each side of said mechanism and secured to a base member flange, each of said closure members having a pair of parallel ridges formed thereon, each of said ridges being formed in a plane substantially perpendicular to the axis of said base member whereby each of said pairs of ridges defines a clamp seat on the surface of one of said closure members, each of said closure members further having an opening extending therethrough and adapted to receive an electrical conductor for connection to said switching mechanism, and a flexible hollow member arranged to be mounted over said closure members in contact with the ridged portions thereof respectively thereby substantially to enclose said switch, said portion of said resilient member being arranged adjacent said hollow member whereby said movable member may be moved to said predetermined position by an external force acting through said hollow member on said resilient member.

6. An electric switch comprising a switching mechanism having a button extending from the top thereof,

said button being normally biased to an outward position and being adapted to close an electric circuit when moved to an inner position, an elongated base member secured to the bottom of said mechanism and arranged to extend beyond said mechanism on each side thereof, said base member having a flange formed substantially perpendicular thereto at each end thereof, a U-shaped resilient member having one leg secured to said base member and having the other leg extending over said button whereby deflection of said other leg will cause said button to move to said inner position, a pair of closure members arranged respectively on each side of said mechanism and secured to a base member flange, each of said closure members further having an opening extending therethrough substantially parallel to said base member and being adapted to receive an electrical conductor for connection to said switching mechanism, and a flexible hollow member arranged to be mounted over said closure members in contact with the ridged portions thereof respectively thereby substantially to enclose said switch, said other leg of said resilient member being arranged adjacent said hollow member whereby said movable member may be moved to said predetermined position by an external force acting through said hollow member on said resilient member.

7. An electric switch comprising a switching mechanism having a button extending from the top thereof, said button being normally biased to an outward position and being adapted to close an electric circuit when moved to an inner position, an elongated base member secured

to the bottom of said mechanism and arranged to extend beyond said mechanism on each side thereof, said base member having a flange formed substantially perpendicular thereto at each end thereof, a U-shaped resilient member having one leg secured to said base member and having the other leg extending over said button whereby deflection of said other leg will cause said button to move to said inner position, a pair of closure members each having a slot formed therein extending from the bottom surface thereof, each of said closure members being secured to one of said flanges by engagement to the same in a closure member slot, each of said closure members further having an opening extending therethrough substantially parallel to said base member and being adapted to receive an electrical conductor for connection to said switching mechanism, each of said flanges being arranged to extend partly into a closure member opening whereby it is adapted to secure the electrical conductor, and a hollow member composed of a flexible vinyl material arranged to be mounted over said closure members respectively in contact with the ridged portions thereof thereby substantially to enclose said switch, said other leg of said resilient member being arranged adjacent said hollow member whereby said movable member may be moved to said predetermined position by an external force acting through said hollow member on said resilient member.

References Cited in the file of this patent

UNITED STATES PATENTS

1,911,444 Fator ---------- May 30, 1933