Oct. 22, 1929. D. L. SUMMEY 1,732,917

ELECTRIC FURNACE

Original Filed July 28, 1923 4 Sheets-Sheet 1

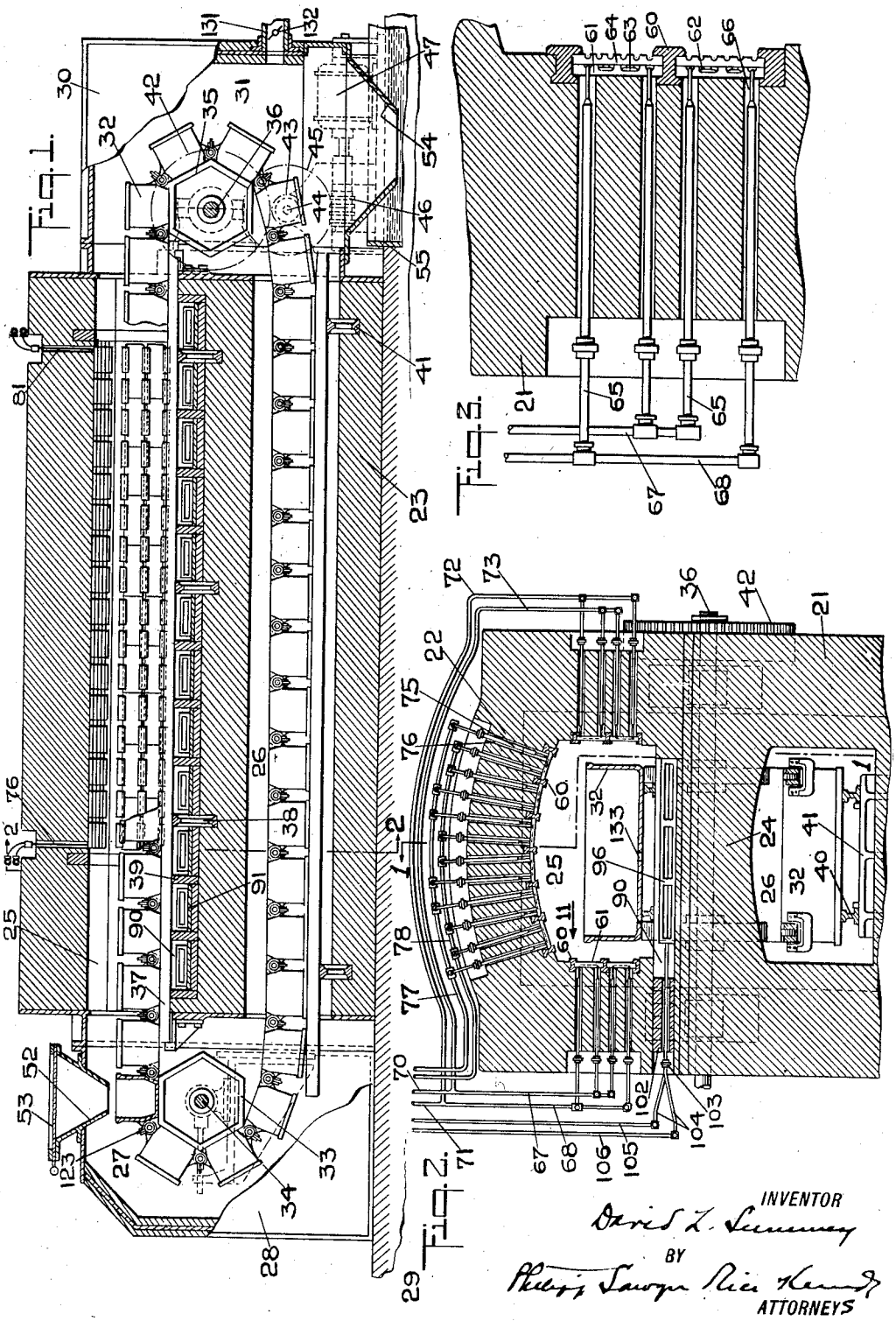


INVENTOR

David L. Summey

BY

Phillips Sawyer Rice & Kennedy

ATTORNEYS

Oct. 22, 1929. D. L. SUMMEY 1,732,917

ELECTRIC FURNACE

Original Filed July 28, 1923 4 Sheets-Sheet 2

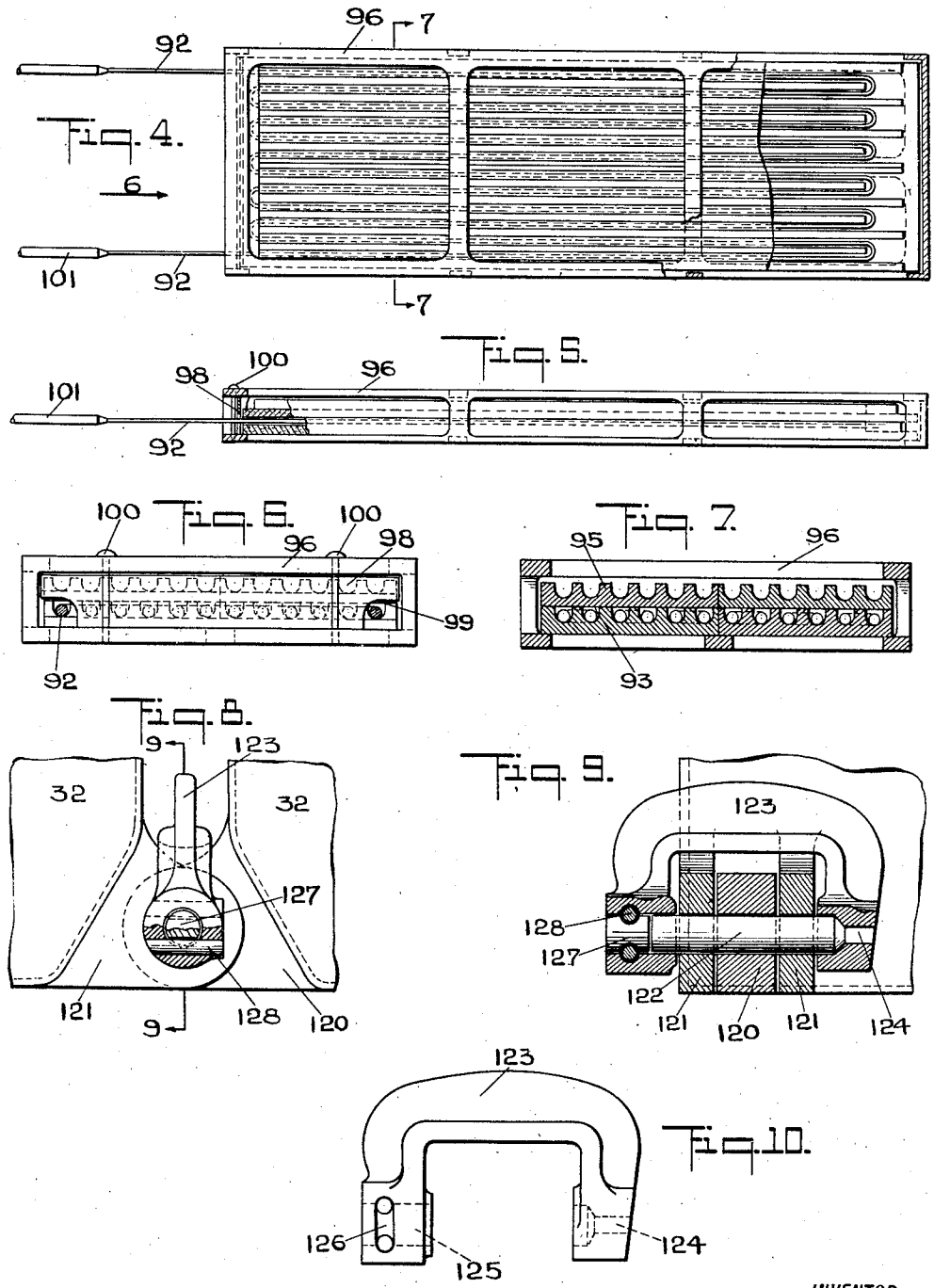


INVENTOR

David L. Summey

BY

Phillips Sawyer Rice & Kennedy

ATTORNEYS

Oct. 22, 1929. D. L. SUMMEY 1,732,917

ELECTRIC FURNACE

Original Filed July 28, 1923 4 Sheets-Sheet 3

Fig. 11.

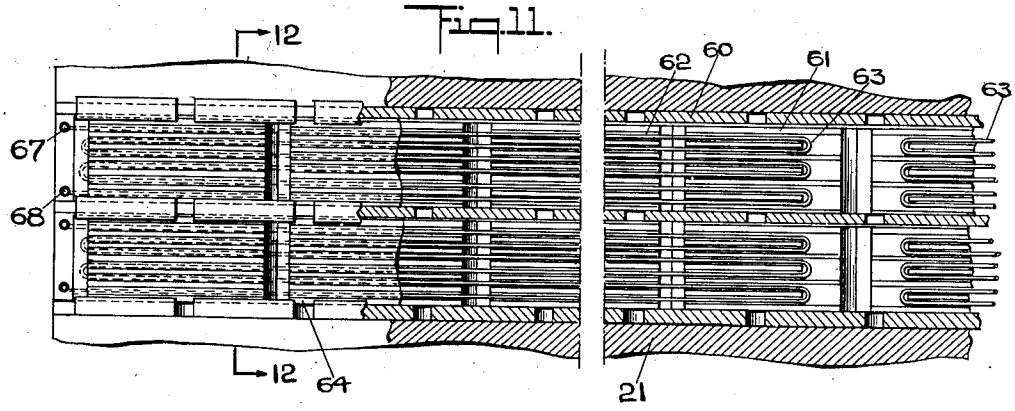


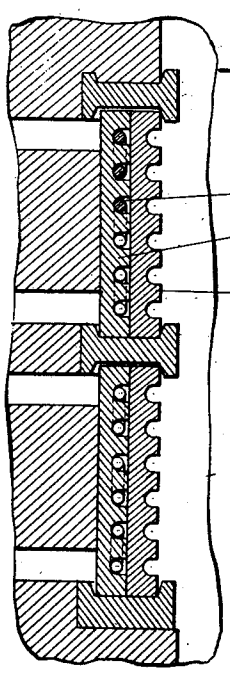


Fig. 12.

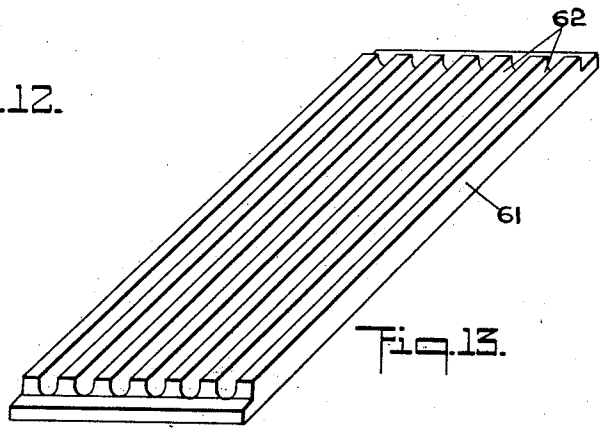


Fig. 13.

Fig. 14.

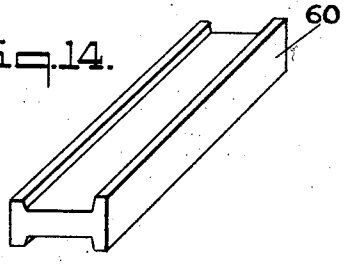


INVENTOR
David L. Summey
BY
Philip Fawyer Rice & Kennedy
ATTORNEY

Oct. 22, 1929. D. L. SUMMEY 1,732,917

ELECTRIC FURNACE

Original Filed July 28, 1923 4 Sheets-Sheet 4

Fig. 15.

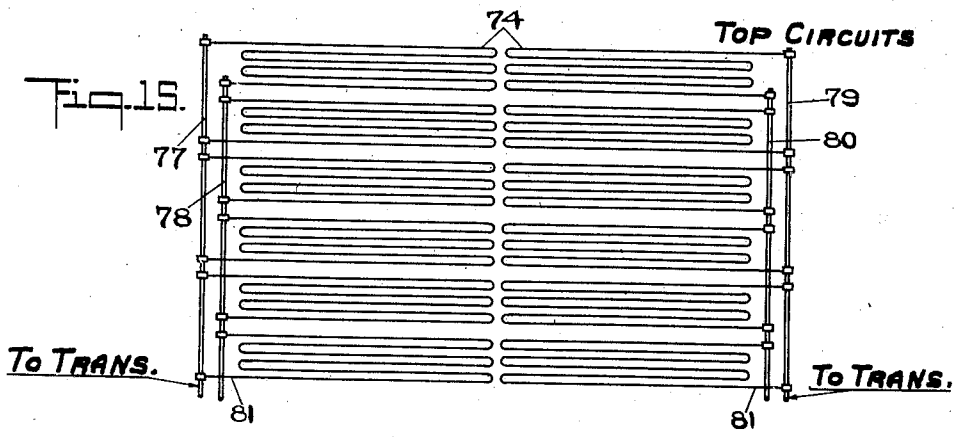


Fig. 16.

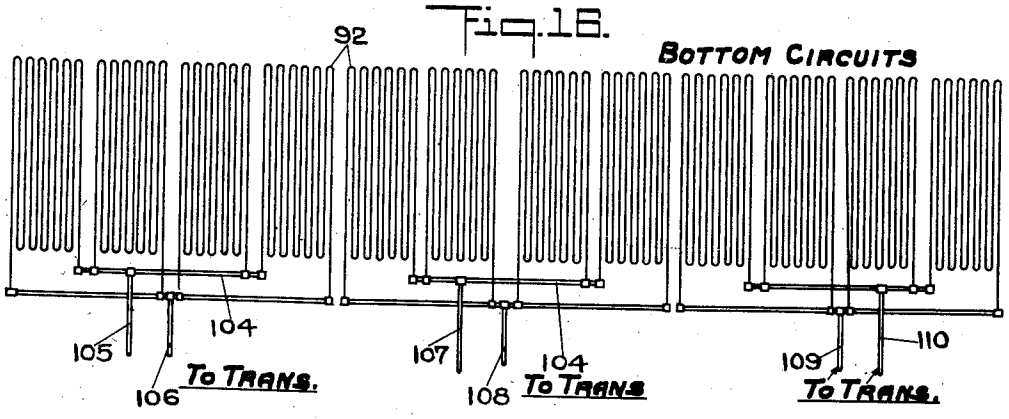


Fig. 17.

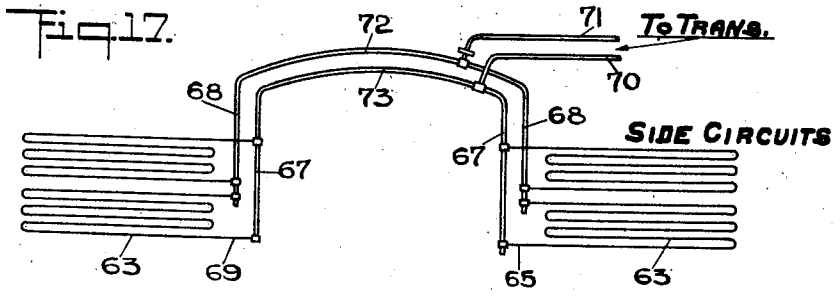


INVENTOR
David L. Summey
BY
Philipp Sawyer Rice & Kennedy
ATTORNEYS

Patented Oct. 22, 1929 1,732,917

# UNITED STATES PATENT OFFICE

DAVID L. SUMMEY, OF WATERBURY, CONNECTICUT, ASSIGNOR TO SCOVILL MANUFACTURING COMPANY, OF WATERBURY, CONNECTICUT, A CORPORATION OF CONNECTICUT

## ELECTRIC FURNACE

Original application filed July 28, 1923, Serial No, 654,295. Divided and this application filed March 26, 1927. Serial No. 178,647.

This invention relates to electric furnaces. The present application is a division from an application filed July 28, 1923, Serial No. 654,295.

It is an object of the invention to provide an effective electric furnace, and particularly an electric furnace for heat-treating articles such as brass shells.

It is a further object of the invention to provide an electric furnace having heating units removable from outside the furnace.

With this general object in view the invention consists in the features, combinations, details of construction, and arrangements of parts which will first be described in connection with the accompanying drawings, and then more particularly pointed out.

In the drawings—

Figure 1 is a longitudinal sectional view, with parts broken away, of an electric furnace constructed in accordance with the invention;

Figure 2 is a sectional view taken on the line 2—2 of Fig. 1;

Figure 3 is a detail view showing part of Fig. 2 enlarged;

Figure 4 is a top plan view, with parts broken away and in section, of one of the removable heating units;

Figure 5 is a side view of the same with parts broken away and in section;

Figure 6 is an end view, with parts in section, looking in the direction of the arrow 6 in Fig. 4;

Figure 7 is a sectional view taken on the line 7—7 of Fig. 4;

Figure 8 is a detail view showing partly in section and partly in elevation the manner of connecting the buckets;

Figure 9 is a sectional view taken on the line 9—9 of Fig. 8;

Figure 10 is a view in side elevation of one of the shackles removed;

Figure 11 is an enlarged view partly in side elevation and with parts broken away and in section, of part of one side wall of the heating chamber, looking in the direction of the arrow 11 of Fig. 2;

Figure 12 is a sectional view taken on the line 12—12 of Fig. 11;

Figure 13 is a perspective view of a supporting block removed;

Figure 14 is a similar view of a bracket; and

Figures 15, 16 and 17 are wiring diagrams.

Referring to the drawings, there is provided a substantially closed furnace housing having a heating chamber. As here shown as an example, the furnace comprises a main housing having side walls 21, a top arch 22 and a bottom wall 23. These elements are here shown in a conventional manner only and may be of any suitable construction. An intermediate arch 24 divides the interior of the main housing into the parallel longitudinal chambers 25, 26 running from end to end of the housing. As later described the upper chamber has heating means and may be termed the heating chamber. At one end of the furnace (the left end in Fig. 1) the chambers 25, 26 open into a charging chamber 27 enclosed by a supplemental housing or hood 28 which seats on the foundation 29. At the opposite end, a second supplemental housing or hood 30 encloses a discharge chamber 31, into which the longitudinal chambers open.

There is provided means for conveying the articles to be heated through the heating chamber of the furnace and in structures embodying the invention to the best advantage, the articles are moved by an endless conveyor, enclosed by the furnace housing. Although capable of various constructions, in the present embodiment, the conveyor comprises an endless chain of buckets 32 connected together as later described. These buckets are arranged with their longer axes parallel to one another and transverse the furnace chambers. Each bucket is designed to hold a relatively large mass of small articles, such as brass shells, for example. In the charging chamber 27 are two hexagonal pulleys 33 mounted on a suitably journaled horizontal shaft 34, the faces of these pulleys being arranged to receive the bottom of the buckets. In the discharge chamber 31 are two similar pulleys 35 mounted on a suitably journaled horizontal shaft 36. As appears in Fig. 1, the bucket chain, between the pulleys, has

an upper strand of upright buckets and a lower strand of inverted buckets. In the furnace shown, this upper strand travels through the heating chamber 25, being slidable on rails 37 supported on T-beams 38 and pillars 39 from the intermediate arch. The lower strand travels in the reverse direction in the return chamber 26, the inverted buckets sliding on rails 40 supported by T-beams 41 from the bottom wall of the furnace housing. As appears in Fig. 1, both sets of rails extend into the end chambers in proximity to the pulleys so that the buckets can readily pass from pulleys to rails and from rails to pulleys.

There is provided means for driving the conveyor, preferably with a continuous movement. As here shown as an example, on the shaft 36 is a gear 42 meshing with a pinion 43 on a stud 44. The latter is rotated by a worm wheel 45 meshing with a worm 46 coupled to a motor 47. This motor is operated so as to drive the chain of buckets at such a speed as to enable the heat treatment to be accomplished, the upper strand moving from the charging to the discharging end of the furnace, that is, from left to right as viewed in Fig. 1.

There is provided means whereby the articles may be delivered to the buckets while in the charging chamber. As here shown as an example, in the top hood 28, above the first upright bucket, is a charging spout 52 through which the articles may be delivered to the charging chamber, falling by gravity to the bucket beneath. The spout has a normally closed door or gate 53 which may be opened to permit the articles to be delivered to the buckets. If desired, automatic charging means such as shown in a copending application, Serial Number 654,294, Patent No. 1,554,241, may be employed. Although the buckets described have a continuous movement, this movement is so slow that a bucket may be readily filled as it passes beneath spout 52.

There is provided, adjacent the discharge end of the furnace, a tank for containing a cooling liquid into which the articles are delivered from the buckets after being heated. As here shown as an example, beneath the discharge hood 31, extends a tank 55 for containing a cooling liquid, for example, water. As the buckets turn down over pulleys 35 and approach an inverted position, the heated articles fall out by gravity and drop into the cooling liquid which cushions their fall and quenches them. The articles are confined in a small area in the tank by a funnel 54 and may be removed in any suitable manner, for example, by the means shown in the copending application referred to.

The water or other liquid in the tank also serves as a seal for the discharge chamber, thereby conserving heat and excluding air.

There is provided means for electrically heating the articles during their travel through the heating chamber and in structures embodying the invention to the best advantage, the path of the upper strand of the conveyor is surrounded by heating elements. The invention in its entirety also includes heating elements individually removable from the outside of the furnace and while the conveyor is in place. In the present exemplification, set in one side wall of the heating chamber 25 are three longitudinal rows of T-brackets 60 (Fig. 14). Suspended between adjacent brackets 60, are two rows of resistor supports 61 (Fig. 13). These supports are rectangular blocks formed of refractory and insulating material, such as fire brick, and are formed with a series of parallel grooves 62. Supported by the blocks are electric resistor wires 63 made, for example, of nickel-chromium alloy and arranged in a series of reverse hair-pin bends (Fig. 11) laid in the grooves 62. As shown, four wires are provided for the side of the heating chamber, two wires being carried by the upper row of blocks 61 and two by the lower row. Each wire has its loops extending longitudinally of the furnace across several supporting blocks (Fig. 11) so that two alined wires are coextensive with the heating zone. Also suspended in the T-brackets 60 are blocks 64 located between the supporting blocks 61 and the heating chamber. As shown, these blocks 64 are duplicates of the supporting blocks 61. The blocks 64 serve as covers for the resistors and with the construction shown the grooves give a large heat radiating surface and manufacturing cost is reduced.

Adjacent one end of a row of supporting blocks 61 the ends of two of the resistor wires are turned outwardly and terminate in leads 65 passing through suitable passageways 66 in the furnace side wall and connected to bus bars 67, 68 outside the main housing (Figs. 2 and 3). As shown, the leads 65 are of a substantially greater cross section than the looped wires 63. The leads 65 and wires 63 may be integral or may be formed separately and welded or otherwise connected together. With the construction described the heating effect of the leads is materially reduced and concentration of heat in the furnace walls is avoided.

At the opposite end of the supporting blocks, the ends of the other two resistor wires are connected to the bus bars in the manner above described and shown in Figs. 2 and 3. While the leads for these wires are not shown, they are indicated at 69 in the wiring diagram of Fig. 17. As there shown the bus bars 67, 68 are connected to conductors 70, 71 which lead to a suitable transformer and current source (not shown).

The heating means adjacent the other side wall of the heating chamber is, in the present

embodiment, a duplication of the heating means above described. The two sets of bus bars are connected by suitable conductors 72, 73 (Fig. 2).

Heating elements of a similar type are provided for the top of the heating chamber. To this end, as here illustrated as an example, set in the inner wall of the arch 22, are seven longitudinal rows of T-brackets 60 and suspended in these brackets are six rows of complementary supporting blocks 61 and cover blocks 64 arranged in the manner described in connection with the side heaters. Supported in the grooves of the blocks 61 are resistor wires 74 arranged like wires 63, that is, in a series of reverse hair-pin bends or loops. The top heating means is not shown in detail but it is indicated in Figs. 1 and 2 and Fig. 15 shows twelve wires. That is, for each row of supporting blocks there is provided two wires, the loops of each running from one end toward the middle, the two alined wires being substantially coextensive with the heating zone.

At one end of the row of blocks, that it, near one end of the furnace, the ends of six wires are turned upwardly, and terminate in leads 75 (Fig. 2) passing through suitable passageways 76 in the arch 22 and connected to bus bars 77, 78 outside the main housing. As in the case of the leads 65, the leads 75 are of an increased cross-section to prevent concentration of heat in the furnace wall. At the opposite end of the row of blocks, the other six wires are similarly connected to bus bars 79, 80, leading to a suitable transformer and current source (not shown). One lead 81 for this end of the arch is shown in Fig. 1 and the others are indicated in the diagram of Fig. 15, it being understood that they are like the leads 75 shown in Fig. 2.

It is to be understood that any suitable number of resistor wires may be used at both the top and sides of the heating chamber, the number here shown being by way of example.

As above stated, the invention in its entirety includes electric resistance elements individually removable from the outside of the furnace. In the present embodiment of the invention, the removable heating elements are those located between the strands of the conveyor and they are removable while the conveyor is in place. This may be accomplished, for example, by means of individual heating units slidable transversely of the furnace along a suitable support, which with the type of furnace described, may include the intermediate arch. Although capable of various constructions, in that here shown as an example, associated with the bottom of the heating chamber 25, are a number of transverse passageways 90 separated by the pillars 39 and opening at the top into the heating chamber. These passages extend across the bottom of the heating chamber and at one end, the left in Fig. 2, they penetrate the side wall of the main housing. At the bottom of these passages are bearing plates 91, which may be suitably made of carborundum, and which are supported, in part, by the intermediate arch 24.

Slidable in each passage along the bearing plate 91, is a removable heating unit and in structures embodying the invention to the best example, this unit comprises a supporting block, a resistor wire, a cover block and an element for binding the blocks together so as to form a manipulable assembled unit. As here shown as an example, the resistor is a nickel-chromium alloy wire 92 arranged in a series of reverse hair-pin bends and supported in the grooves 93 of a refractory insulating supporting block, similar to the block 61 above described. Over the supporting block and its wire is placed a refractory insulating cover block 95 similar to cover block 64. The assembled blocks are carried by a skeleton metal frame 96 of an inside capacity to freely but firmly fit the superposed blocks. In the frame shown one end is closed, the other end open. To assemble the unit, the superposed blocks are slid into the open end of the frame until they engage the closed end. The open end is then closed to retain the blocks in place. To this end, as here shown as an example, after the blocks are inserted in the frame, a closure plate 98 is inserted in the open end of the frame. This plate is of a size to fit within the end of the frame 96 and its lower corners are cut away, as at 99, to permit passage of the ends of the wire. Outside the closure plate are two headed pins 100 which are dropped through suitable alined holes in the top and bottom of the frame.

In the best constructions embodying the invention, the frame parts are formed of a metal having substantially the same heat-resisting qualities as the resistor wire, e. g. nickel-chromium alloy. When the plate 98 and pins 100 are in place the blocks are held in place in the frame and the entire assembled unit is readily moved about. The ends of wire 92 are integral with or connected to leads 101 of an increased diameter as in the case of the leads above described. The unit as a whole, as appears in Fig. 2, is of a length slightly less than the width of the heating chamber. When in place, the unit extends across the bottom of the chamber between the two strands of buckets and just below the buckets of the upper conveying strand.

In assembling the furnace, the unit described is slid along passage 90 on the bearing plate 91 until the frame is positioned by being stopped at the end of the passage (Fig. 2). To close the passage, after insertion of the unit, as here shown as an example, the end of the passage 90 is plugged by a number of perforated bricks 102 which are inserted in the

passage, the leads 101 passing through the perforations. Fire clay may be used to lute the joints. Beyond the outside brick the leads are connected by a coupling 103 to conductors 104 connected to bus bars 105, 106 leading to a suitable transformer and current source (not shown). To remove the unit, for repairs, substitution or the like, the fire clay and bricks 102 are raked out, whereupon the heating unit may be pulled out of the passage along the bearing plate. The unit itself is readily disassembled by removing the pins 100 and plate 98. With the construction described the heating unit is readily manipulable and a unit may be removed and replaced from outside the furnace and while the conveyor chain is in place.

As appears in Fig. 1, units are provided to extend substantially from end to end of the heating chamber. As here shown, there are twelve heating units such as that described, these units being duplications except that three sets of bus bars are provided, as appears in Fig. 16. The bus bars 105, 106 receive the leads from the first four units from the left as viewed in Figs. 1 and 16. Bus bars 107, 108 receive the leads of the next four wires and bus bars 109, 110 receive the leads of the last four wires.

In the construction described, with the conveyor chain enclosed by the housing and the idle return strand returning through the lower chamber 26, there is a material economy in heat requirements. While there is a drop in the temperature of the buckets, the temperature is held up to such a point that it may be brought back to the heat treatment level without excess heat input. If desired, the return chamber may be heated also, in order to further reduce the drop in the temperature of the buckets. For example, the heating means above described may be duplicated in the lower chamber. In connection with the conservation of heat, it is noted that any of the passages for leads or other furnace openings may be luted with fire clay.

The buckets of the conveyor chain are connected together in a manner to permit the chain movement under conditions in which ordinary lubrication is impossible.

As here shown as an example, the buckets have on one side a pair of perforated lugs 120 and on the other side a pair of perforated yokes 121. The buckets are connected together in the form of a chain by assembling the buckets with the yokes 121 of one bucket straddling the lugs 120 of the adjacent bucket and passing pivot pins 122 through the alined perforations. In the present embodiment these pins have the form of plain cylinders and are of a length to extend beyond the overlapping yokes and lugs at each end. They are made of a metal having wearing qualities and capable of withstanding continued high temperatures. For this purpose nickel-chromium alloy is suitable. The buckets in the present embodiment are also made of nickel-chromium alloy. With the construction described the buckets are connected in the form of an endless chain in a simple manner and the chain as a whole is capable of withstanding continued high temperatures and continued operation without undue wear in the pivots.

There is provided means for preventing the pins or pieces thereof from dropping out. As here shown as an example, the ends of each pin 122 are journaled in the ends of a shackle 123. One end of the shackle, the right end in Fig. 9, has an opening 124 therethrough, part of which is reduced in diameter to a size considerably smaller than the diameter of the pivot pin. With this construction the end of the shackle acts as a stop against endwise movement of the pin in one direction as the pin cannot pass the reduced opening, but the opening permits access to the pin to drive it out in the other direction. The other end of the shackle has bore 125 of a size to pass the pin for assembly or disassembly. To block this bore to prevent endwise movement of the pin, as here shown as an example, the end of the shackle has a boss 126 which is drilled with two holes (shown in Fig. 10) at right angles to the axis of bore 125 and so located that each hole grooves the wall of bore 125. Insertable in the open end of the bore after the pivot pin is assembled is a cylindrical plug 127 of substantially the same diameter as the pin. This plug is grooved to form, in connection with the grooves in the wall of bore 125, passageways for locking pins 128. These locking pins are inserted through the holes formed in boss 126 and lock the plug 127 in place. With the construction described, the shackles hold the pivot pins in place and the pins cannot drop out nor can pieces drop out if a pin breaks. The parts, however, are readily disassembled and reassembled for repairs and the like and there is no interference with the pivotal movements of the pins.

As above stated, the buckets and their pivot pins are made of a material that will retain its physical strength under continued high temperatures, for example, nickel-chromium alloy—a material having the same heat-resisting characteristics as the resistor wires. In the furnace here illustrated, the shackles 123 and their associated parts, the upper rails 37, the T-beams 38, the skeleton frames for the removable heating units, and the discharge pulleys 35 are also made of nickel-chromium alloy.

There is provided means whereby the articles under treatment may be subjected to an oxidizing action and in structures embodying the invention to the best advantage this oxidizing takes place during the early part

of the travel through the heating chamber and thereafter the articles are subjected to a non-oxidizing atmosphere. In the present embodiment of the invention, although the furnace housing is substantially closed, there is some air leakage, for example, through the intermittently opened charging gate and around the charging pulley shaft. In the wall of the discharge hood is an exhaust pipe 131 designed for connection to a stack for drawing off the furnace gases. The draft created causes a slight flow of air from the charging end of the furnace toward the discharging end. In the pipe 131 is a regulable damper 132 for controlling the draft. To permit the circulating air to have access to the articles in the buckets, each bucket has formed in the bottom thereof one or more small holes 133 for the passage of the air up through the mass of articles being conveyed. As a bucket enters the heating zone, this air circulation results in an oxidation of the oil or soap solution with which the articles may be coated and so prevents stains on the treated articles. By the time the articles travel well into the heating chamber and become highly heated the oxidizing air has been largely replaced by furnace gases and steam from the cooling tank. Consequently, after the earlier part of the heat treatment the articles are subjected to a substantially non-oxidizing atmosphere. The damper is kept as nearly closed as possible to obtain just enough draft to effect the desired result. Should the treated articles come out stained, the damper is opened slightly and an increased oxidation results. While the pipe 131 is shown in the end wall of the discharge chamber it may, of course, be located at any suitable point, for example, in the top wall.

The operation of the furnace will be clear from the above without further description.

What I claim is:

1. In a furnace for heat treating metal articles, and in combination, a furnace housing having an intermediate arch dividing the housing into upper and lower chambers, an endless conveyor having one strand moving through the upper chamber and its other strand returning through the lower chamber, electric resistance elements supported by the top and side walls of the upper chamber, and electric resistance elements located between the strands of the conveyor and supported by said arch.

2. In a furnace for heat treating metal articles, and in combination, a furnace housing having two longitudinal chambers located one above the other, an endless chain of buckets having its upper strand of upright buckets moving through the upper chamber and its lower strand of inverted buckets moving through the lower chamber, and a plurality of electric resistance elements associated with the upper chamber for heating the same.

3. In a furnace for heat treating metal articles, and in combination, a furnace housing having a heating chamber, means for conveying articles to be heated through said chamber, and a plurality of electric resistance elements associated with said chamber and individually removable from the outside of the furnace.

4. In a furnace for heat treating metal articles, and in combination, a furnace housing having two longitudinal chambers therein, an endless conveyor having one strand moving through one chamber and the other strand moving through the other chamber, and a plurality of electric resistance elements located between the two strands of the conveyor and individually removable while the conveyor is in place.

4. In a furnace for heat treating metal articles, and in combination, a furnace housing having two longitudinal chambers therein, an endless conveyor having one strand moving through one chamber and the other strand moving through the other chamber, and a plurality of electric resistance elements located between the two strands of the conveyor and indivdually removable from the outside of the housing.

6. In a furnace for heat treating metal articles, and in combination, a furnace housing having two longitudinal chambers therein, an endless conveyor having one strand moving through one chamber and the other strand moving through the other chamber, the furnace housing having a plurality of transverse horizontal passageways between the conveyor strands, and a plurality of electric resistance heating units slidable in and out of said passageways.

7. In a furnace for heat treating metal articles, and in combination, a furnace housing having a heating chamber, means for conveying articles to be heated through said chamber, the housing having a passageway leading from a point outside the furnace to a point adjacent the heating chamber, and an electric resistance heating unit insertible and removable through said passageway.

8. In a furnace for heat treating metal articles, and in combination, a furnace housing having a heating chamber, conveyor means for moving the articles through the heating chamber, the housing having a transverse passageway communicating with the heating chamber and leading from a point outside the housing, a bearing plate at the bottom of said housing, and an electric resistance heating unit slidable along said bearing plate.

9. In a furnace for heat treating metal articles, and in combination, a furnace housing having a heating chamber, conveyor means for moving the articles through the heating chamber, the housing having a transverse passageway communicating with the heating chamber and leading from a point outside the

housing, a bearing plate at the bottom of said housing, and an electric resistance heating unit comprising a resistor, a supporting block and a metal frame, slidable along said bearing plate.

10. In a furnace for heat treating metal articles, and in combination, a furnace housing having a heating chamber, means for conveying articles to be heated through said chamber, bus bars outside the furnace, and electric resistance wires located adjacent the inner walls of said chamber for heating the same and having lead connections to said bus bars passing through passageways in the housing walls, said leads being of a greater cross section than the heating wires.

In testimony whereof, I have hereunto set my hand.

DAVID L. SUMMEY.