US00D355759S

United States Patent [19]

Koch

[11] Patent Number: Des. 355,759

[45] Date of Patent: ** Feb. 28, 1995

[54] **TOOL-HOLDING ARMBAND**

[76] Inventor: **Glen W. Koch**, P.O. Box 31058, Seattle, Wash. 98103

[**] Term: **14 Years**

[21] Appl. No.: **10,234**

[22] Filed: **Jun. 30, 1993**

[52] **U.S. Cl.** **D3/228**; D3/224; D3/226

[58] **Field of Search** D3/215, 221, 225, 226, D3/228; 224/219, 205, 221, 222, 224, 151, 237, 267, 901

[56] **References Cited**

U.S. PATENT DOCUMENTS

D. 343,518	1/1994	Saggese	D3/215
1,274,312	7/1918	Nicoll	224/222
4,763,821	8/1988	Powell	224/222
4,974,762	12/1990	Boretsky	224/222
5,020,711	6/1991	Kelley	224/222

Primary Examiner—A. Hugo Word

Assistant Examiner—Catherine R. Oliver

Attorney, Agent, or Firm—Christensen, O'Connor, Johnson & Kindness

[57] **CLAIM**

The ornamental design for a tool-holding armband, as shown and described.

DESCRIPTION

FIG. **1** is a top perspective view of a tool-holding armband showing my new design;

FIG. **2** is a top plan view thereof;

FIG. **3** is a bottom plan view thereof;

FIG. **4** is a side elevational view thereof taken from above FIG. **2**;

FIG. **5** is an end elevational view thereof taken from the left of FIG. **2**;

FIG. **6** is an end elevational view thereof taken from the right of FIG. **2**;

FIG. **7** is a side elevational view thereof taken from below FIG. **2**; and,

FIG. **8** and FIG. **9** are corresponding top perspective views thereof with parts in different positions.

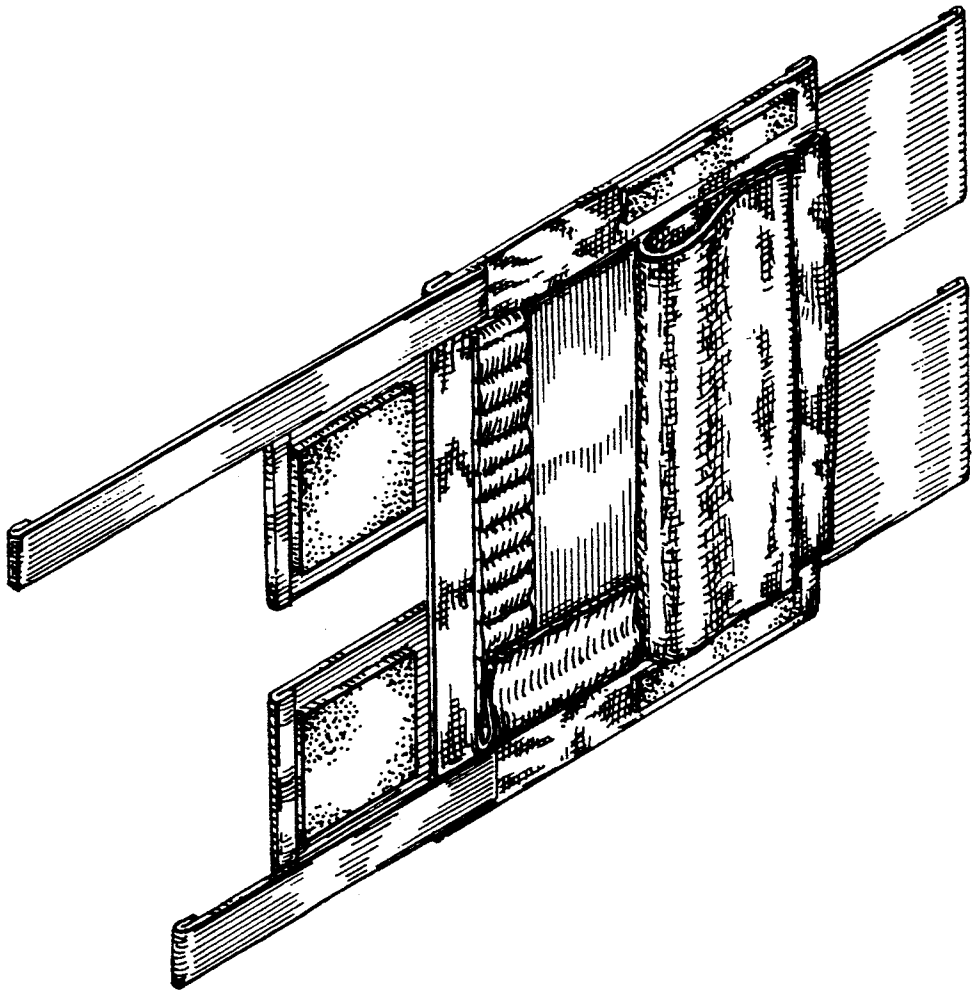

Fig. 1.

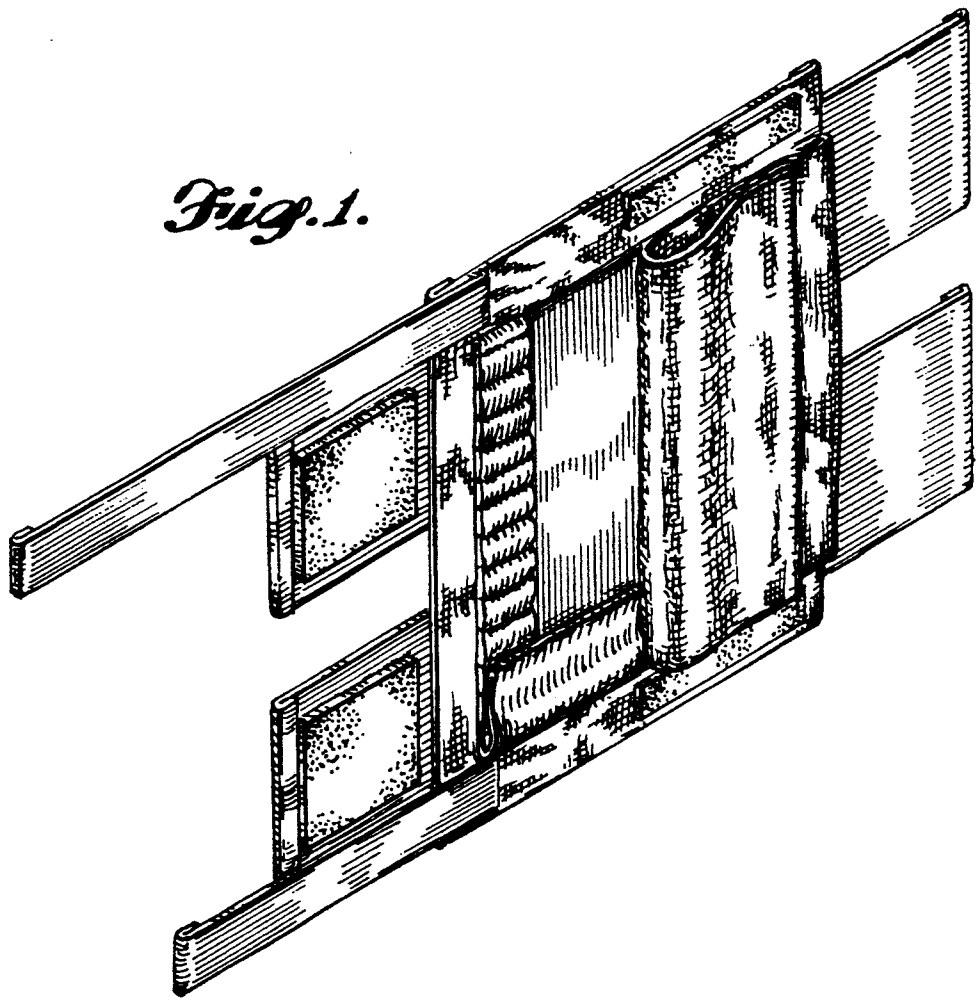

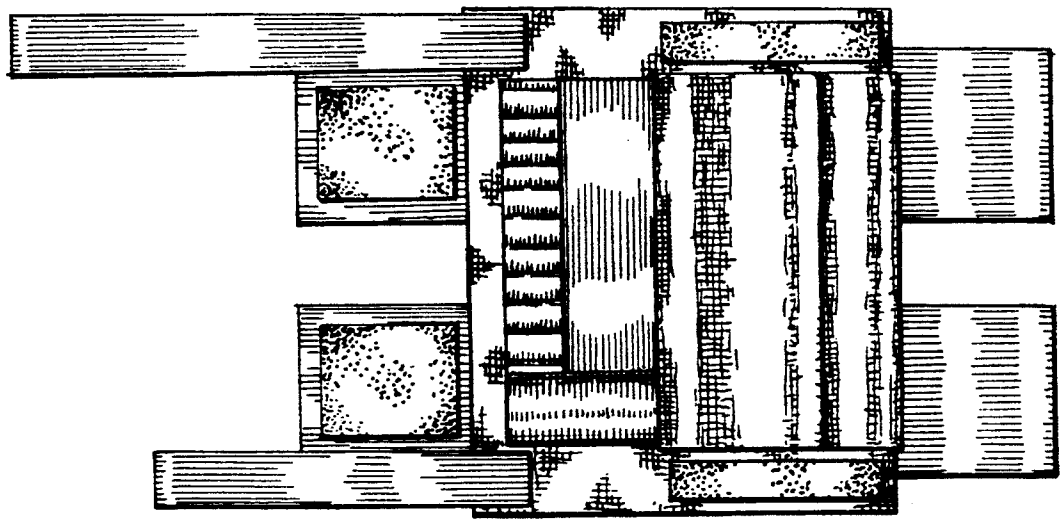

Fig. 2.

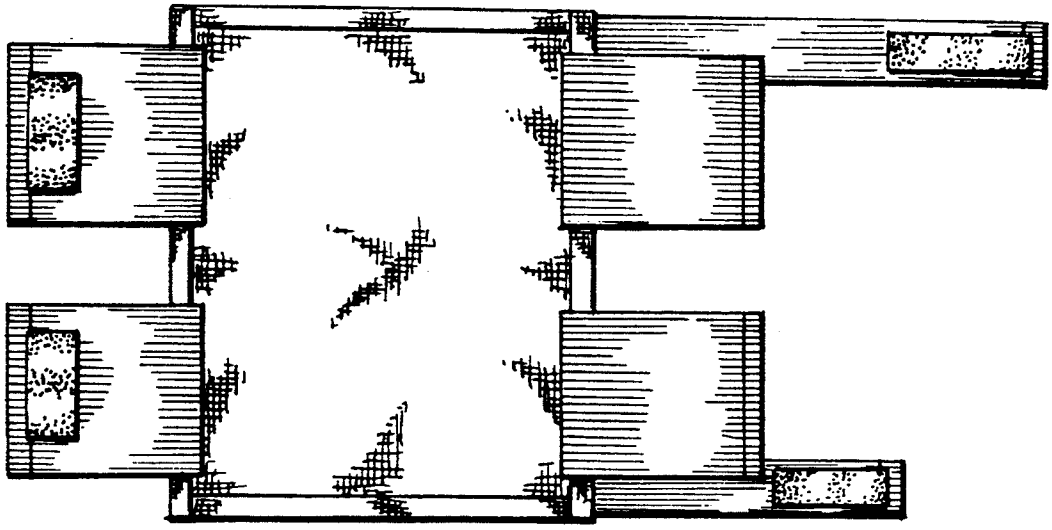

Fig. 3.



Fig. 4.



Fig. 5.



Fig. 6.



Fig. 7.

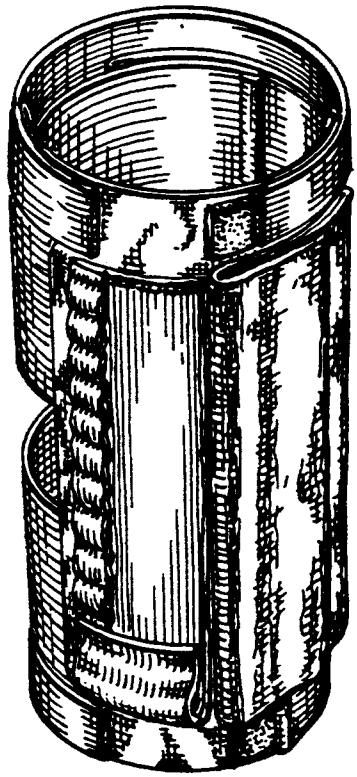

Fig.8.

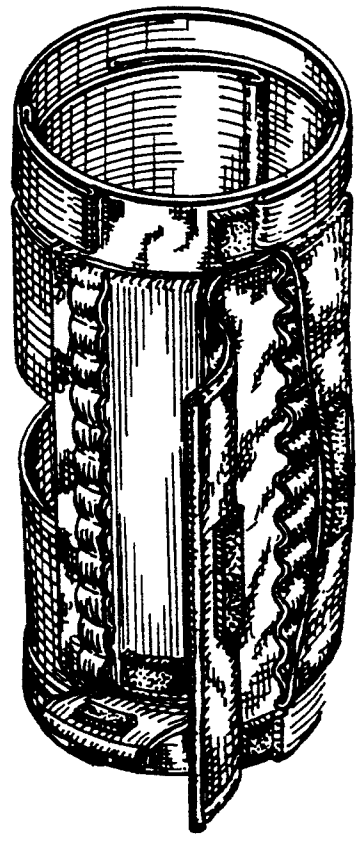

Fig.9.