MACHINE FOR LIQUID TREATMENT OF PHOTOGRAPHIC FILMS OR THE LIKE

Filed June 17, 1968 3 Sheets-Sheet 1

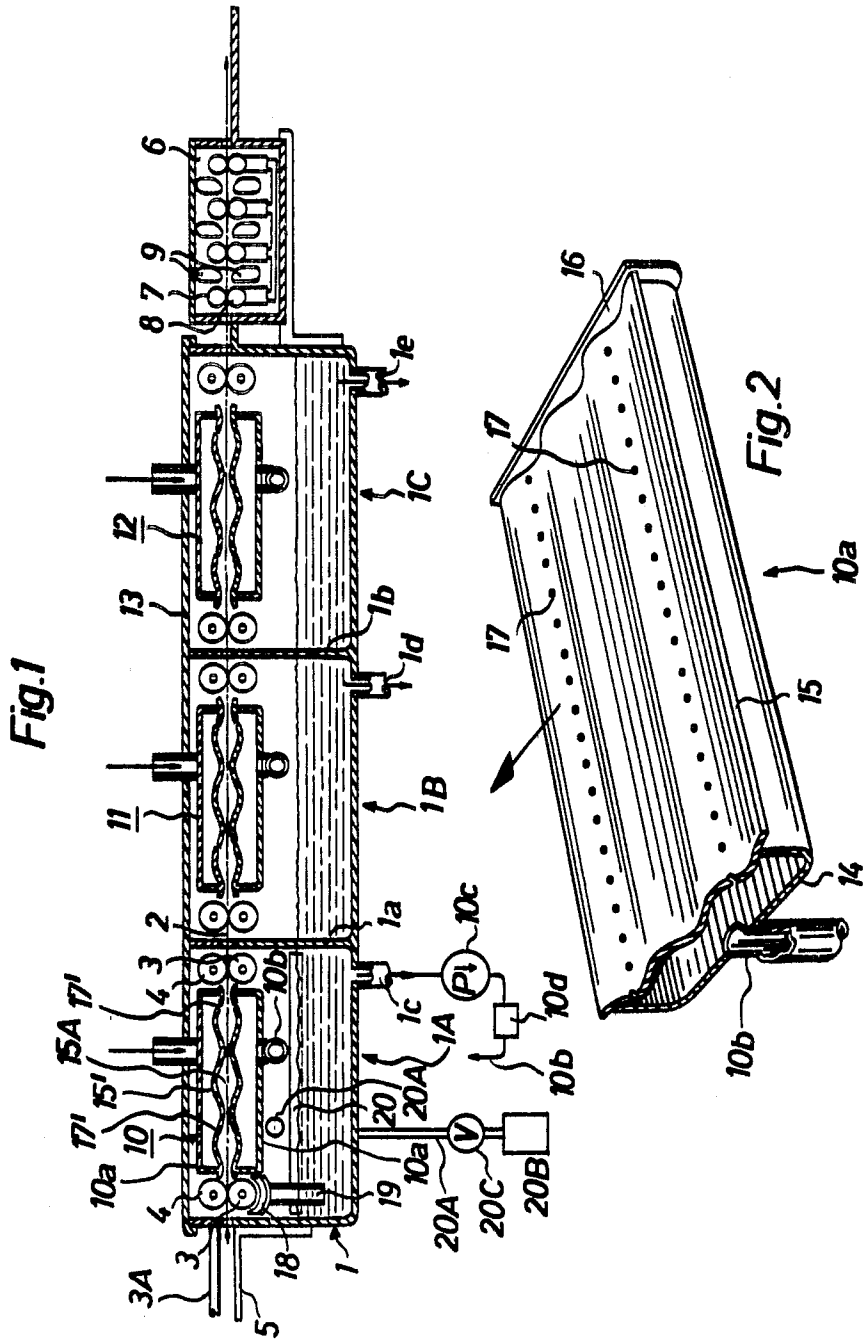

INVENTOR.
HANS-DIETER FRICK
HANS-PETER HUBER
PETER DAWIDOWITSCH
FERDINAND-LEONHARD SCHOUTEDEN
FRANZ KOCOUREK
GERHARD POSCH
WOLFGANG VIEHRING
BY
Michael S. Striker
Attorney

MACHINE FOR LIQUID TREATMENT OF PHOTOGRAPHIC FILMS OR THE LIKE

Filed June 17, 1968 3 Sheets-Sheet 2

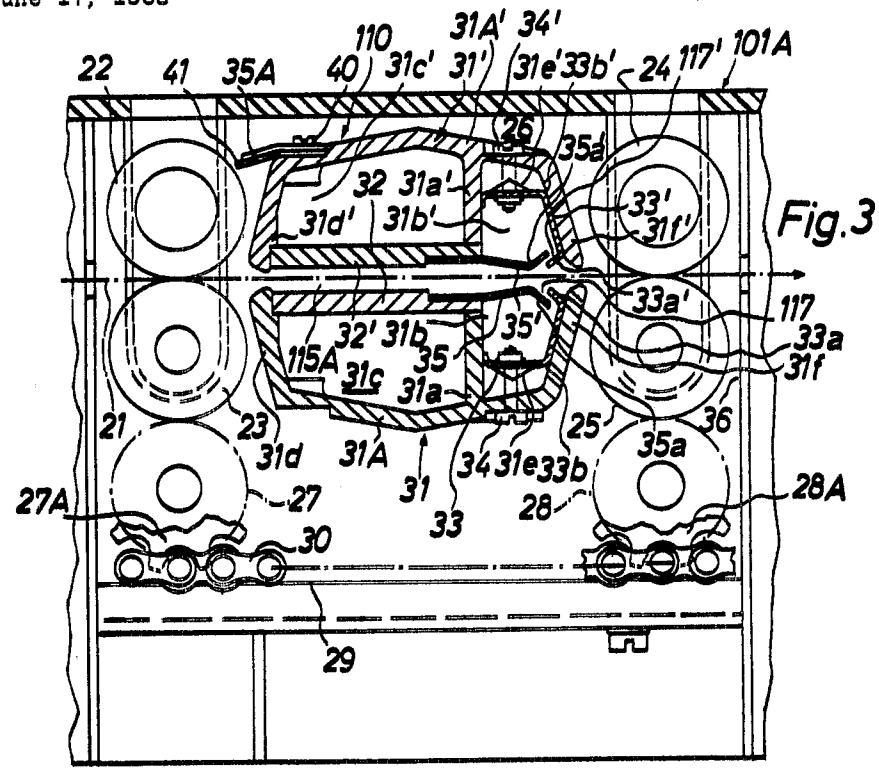

Fig.3

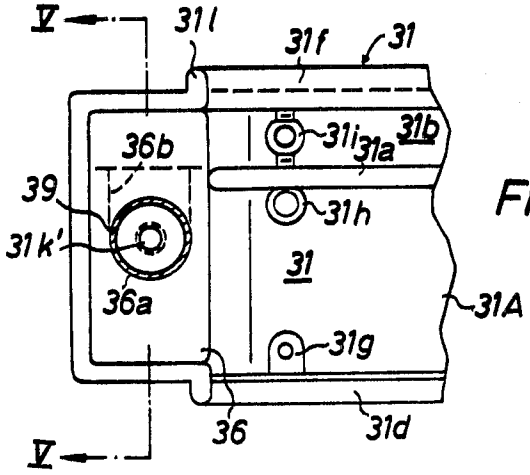

Fig.4

INVENTOR.
HANS-DIETER FRICK
HANS-PETER HUBER
PETER DAWIDOWITSCH
FERDINAND-LEONHARD SCHOUTEDEN
FRANZ KOCOUREK
GERHARD POSCH
WOLFGANG VIEHRING
BY
Michael S. Striker
Attorney

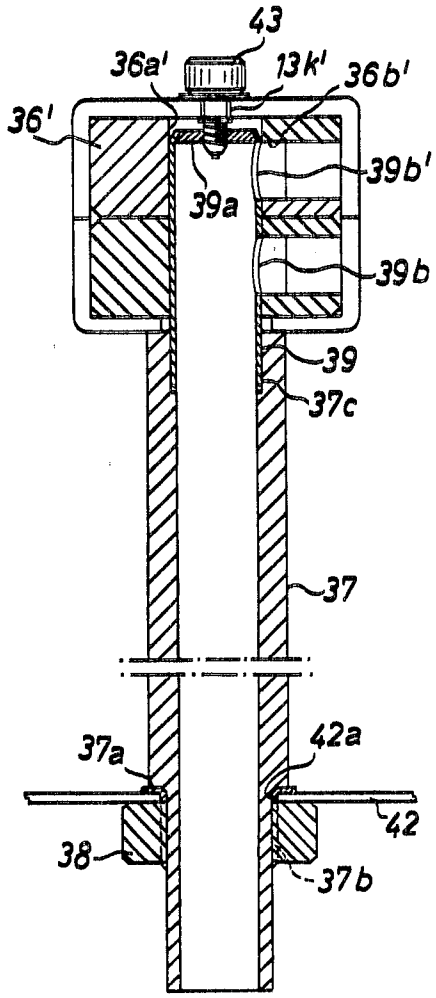

Fig.5

INVENTOR.
HANS-DIETER FRICK
HANS-PETER HUBER
PETER DAWIDOWITSCH
FERDINAND-LEONHARD SCHOUTEDEN
FRANZ KOCOUREK
GERHARD POSCH
WOLFGANG VIEHRING
BY
Michael S. Striker
Attorney

United States Patent Office

3,610,131

Patented Oct. 5, 1971

1

3,610,131

MACHINE FOR LIQUID TREATMENT OF PHOTOGRAPHIC FILMS OR THE LIKE

Hans-Dieter Frick, Hans-Peter Huber, and Peter Dawidowitsch, Munich, Germany, Ferdinand Leonhard Schouteden, Wilrijk, Antwerp, Belgium, and Franz Kocourek, Gerhard Posch, and Wolfgang Viehrig, Munich, Germany, assignors to Agfa-Gevaert Aktiengesellschaft, Leverkusen, Germany

Filed June 17, 1968, Ser. No. 737,561
Claims priority, application Germany, June 30, 1967, A 56,132; Mar. 22, 1968, P 17 72 042.2
Int. Cl. G03d *3/12*
U.S. Cl. 95—94 8 Claims

ABSTRACT OF THE DISCLOSURE

A developing machine for exposed photographic films has a series of tanks each of which accommodates a chamber consisting of upper and lower containers defining between themselves a channel wherein the films advance during travel through the respective tank. The containers have orifices which discharge liquid into the respective channels in such a way that the liquid flows counter to the direction of film travel and forms streams at both sides of films. The orifices are circular holes or elongated slits and their cross-sectional area may be fixed or adjustable. The orifices are adjacent to the film discharging ends of the respective channels.

BACKGROUND OF THE INVENTION

The present invention relates to machines for treating sheet-like workpieces with liquids, and more particularly to improvements in developing machines for exposed photographic film or the like. Still more particularly, the invention relates to improvements in machines wherein travelling sheets of film or like sheet material are treated by contact with liquid streams.

In presently known developing machines, sheets or rolls of films are transported lengthwise and the liquid is caused to flow along both sides of the film but at a higher speed. In this way, the liquid streams facilitate the entry of the leading end of the film into and its advance through the machine. A drawback of such machines is that, in order to complete the treatment within a reasonably short period of time, the speed of the liquid streams must be much higher than the speed of film. This can be achieved by subjecting the liquids to substantial pressure by resorting to large pumps or analogous liquid displacing devices. Moreover, the pumps must circulate large quantities of liquids which is undesirable because the machine is bulky and particularly because the developer is sensitive to oxidation. Any reduction in the speed of liquid streams necessarily entails a reduction in the speed of film travel because the rate at which the film is developed depends on the difference in the speeds of liquid and film.

SUMMARY OF THE INVENTION

It is an object of our invention to provide a machine which can be utilized for developing of exposed photographic films and wherein the circulation of liquids which are brought into contact with films can be effected with simpler apparatus and with savings in energy.

Another object of the invention is to provide a machine of the just outlined character which can complete the treatment of travelling films within shorter periods of time than presently known machines.

A further object of the invention is to provide a machine which can subject travelling films or like sheet-like workpieces to a series of successive treatments and wherein both sides of each workpiece are treated with the same intensity.

2

An additional object of the invention is to provide a machine wherein the liquids which treat the workpieces contribute to proper guidance of workpieces during travel toward and past one or more treating stations.

An ancillary object of the invention is to provide a machine which can treat photographic films in rapid sequence, wherein the intensity of treatment can be regulated with a desired degree of precision, and wherein the liquids which are likely to oxidize are protected from excessive contact with air in a novel and improved way.

Still another object of the instant invention is to provide the above outlined machine with novel means for regulating the rate of flow of liquids which come into contact with workpieces and to further provide the machine with novel means for recirculating such liquids into renewed contact with workpieces.

A further object of the invention is to provide a machine which can be adjusted to accommodate and treat workpieces of different thickness, length and/or width and which requires a minimum of supervision.

Briefly outlined, the invention is embodied in a machine which can be utilized for treatment of sheet-like workpieces, particularly for developing, fixing and washing of exposed photographic films. The machine comprises transporting means for advancing workpieces in a predetermined direction along a predetermined path which is preferably located in a substantially horizontal plane, a treating chamber defining an elongated channel through which the workpieces advance during travel along the path and comprising portions flanking the channel from above and below and each having at least one orifice which directs a stream of liquid into the channel so that the liquid flows along the respective side of the workpiece in the channel and counter to the direction of travel of workpieces, and means for supplying liquid to the chamber.

The chamber is preferably mounted in a tank which collects liquid that issues from the channel so that the thus collected liquid can be withdrawn by the aforementioned supplying means for recirculation through the chamber. The tank may be sealed against entry of air, particularly if the liquid tends to oxidize on contact with air, or the supply of liquid in the tank can be shielded from air by a floating lid.

Each portion of the chamber may be provided with one or more elongated slit-shaped orifices or with one or more rows of circular or short slit-shaped orifices. If each portion of the chamber comprises a single orifice or a single row of orifices, such orifices are preferably provided close to the discharge end of the channel so that liquid issuing from such orifices can treat the workpieces during flow through the major part of the channel prior to issuing at the intake end of the channel to be collected in the bottom zone of the tank.

The novel features which are considered as characteristic of the invention are set forth in particular in the appended claims. The improved machine itself, however, both as to its construction and its mode of operation, together with additional features and advantages thereof, will be best understood upon perusal of the following detailed description of certain specific embodiments with reference to the accompanying drawing.

BRIEF DESCRIPTION OF THE DRAWINGS

FIG. 1 is a longitudinal vertical sectional view of a developing machine which embodies one form of the invention;

FIG. 2 is an enlarged fragmentary perspective view of a container forming part of a treating chamber in the machine of FIG. 1;

FIG. 3 is a fragmentary longitudinal vertical sectional view of a second developing machine;

FIG. 4 is a plan view of a container in the machine of FIG. 3, with certain of its parts omitted; and

FIG. 5 is a vertical sectional view as seen in the direction of arrows from the line V—V of FIG. 4.

DESCRIPTION OF THE PREFERRED EMBODIMENTS

FIG. 1 illustrates a portion of a developing machine which comprises a vessel **1** whose width exceeds somewhat the maximum width of film **2** to be processed in the machine. The distance between the axes of successive pairs of transporting rolls **3, 4** is somewhat less than the length of shortest films which are to be treated during travel through the vessel. The speed at which the film is transported depends on the time required for treatment in successive portions of the vessel **1**. This vessel is provided with two transversely extending vertical partitions **1***a*, **1***b* which extend from the bottom wall of the vessel and close to the path for the film **2**. It can be said that the vessel **1** is composed of three tanks **1**A, **1**B, **1**C in the first of which the film is treated by a liquid developer, in the second of which the film undergoes treatment by contact with a fixing bath, and in the third of which the film is treated with water. The bottom portions of tanks **1**A–**1**C are respectively provided with outlets **1***c*, **1***d*, **1***e*.

The vessel **1** preferably consists of synthetic plastic material and each of its tanks accommodates two pairs of transporting rolls **3, 4**. These pairs of rolls are adjacent to the intake and discharge ends of the respective tanks. The means for driving the rolls **3** and **4** comprises a gear train including two meshing gears for each pair of rolls **3, 4** and a feed screw or worm shaft **3**A which is driven by a motor (not shown) and extends along one side wall of the vessel. The shaft **3**A transmits torque to all of the gears. It is desirable to bias the rolls **3, 4** of each pair against each other, for example, by mounting the shaft or bearing of at least one roll for movement toward and away from the shaft or bearing of the other roll and by placing a prestressed endless helical spring around such shafts or bearings.

A platform or table **5** is mounted at the outer side of the vessel **1** adjacent to and below the inlet of the first tank **1**A to serve as a support for exposed film **2** and to guide the film into the nip between the first transporting rolls **3, 4**. The leading edge of film **2** can be pushed toward the adjoining rolls **3, 4** and the film is thereupon automatically transported through the tanks **1**A–**1**C and is discharged from the vessel **1**. The last tank **1**C is adjacent to a drier **6** which defines a horizontal path for treated film and accommodates several pairs of transporting rolls **7, 8** as well as nozzles **9** which blow air against both sides of the film. A similar drier is disclosed in the copending application Ser. No. 566,691 filed July 20, 1966 by Keller et al. and, now Pat. No. 3,438,140, assigned to the same assignee.

The tanks **1**A, **1**B, **1**C respectively accommodate novel treating chambers **10, 11** and **12** each of which comprises two mirror symmetrical portions or containers one of which is shown in greater detail in FIG. 2. This illustration shows the lower container **10***a* of the first treating chamber **10**. The container **10***a* is connected with a supply conduit **10***b* which feeds thereto liquid developer from a pump **10***c*. The pump **10***c* draws liquid developer from the outlet **1***c* of the tank **1**A. Thus, the liquid circulates in a closed path from the pressure side of the pump **10***c*, into the container **10***a* by way of the supply conduit **10***b*, into the tank **1**A, and to the suction side of the pump by way of the outlet **1***c*. The pump **10***c* can also supply liquid developer to the upper container **10***a'* of the chamber **10** or the container **10***a'* may receive liquid developer from a separate pump which also draws liquid from the tank **1**A. It is clear that the machine may be equipped with a regenerating unit (shown at **10***d* in FIG. 1) which admits to the liquid chemicals at a rate proportional to the rate at which the exposed film is transported through the tank **1**A. The top of the vessel **1** is preferably closed by a cover **13** provided with openings or cutouts for supply conduits and other parts which extend from the interior of the vessel.

The container **10***a* has an undulate top portion or panel **15** whose undulations extend transversely of the direction of film travel and are mirror symmetrical to those formed by the top panel **15'** of the upper container **10***a'*. The panels **15, 15***a'* define between themselves an elongated channel **15**A whose height varies gradually between a maximum height (between two valleys) and a minimum height (between two hills). In the illustrated embodiment, each of the panels **15, 15'** is formed with three valleys and the panels together define four constrictions in the channel **15**A including two outermost constrictions and two intermediate constrictions.

The panel **15** has two lines or rows of orifices **17** whose axes are normal or nearly normal to the surrounding portions of the panel and which discharge streams of liquid developer into the channel **15**A. The orifices **17'** of the panel **15'** are mirror symmetrical to the orifices **17** with reference to the plane of the film **2**. The orifices **17, 17'** are provided upstream of the second and fourth constrictions in the channel **15**A, i.e., in such portions of the panels **15, 15'** which slope toward the plane of the film **2**. It will be seen that the orifices **17, 17'** discharge liquid developer in a direction which has a component in a horizontal plane and is counter to the direction of film advance. The deforming action of streams which issue from the orifices **17** and impinge against the underside of the film **2** is compensated for by the deforming action of streams which issue from the orifices **17'**.

The front, rear and bottom panels of the container **10***a* shown in FIG. 2 are formed by a one-piece U-shaped body **14** of synthetic plastic material whose edges are welded to the top panel **15** and to two flat lateral panels **16** (only one shown in FIG. 2). The top edges of the panels **16** extend beyond the crests of the panel **15** by a distance which is about 1/25 of an inch so that, when the lateral panels of the upper container **10***a'* are placed against the lateral panels **16** of the container **10***a*, they form two continuous barriers along the sides of the channel **15**A and insure that the constrictions of the channel **15**A are wide enough (about 2/25 of an inch) to permit passage of thicker or thinner films and of layers of developing liquid along both sides of the film (but in the opposite direction). As stated above, the rows of orifices **17, 17'** are located upstream of the adjoining constrictions in the channel **15**A. The U-shaped part **14** of the lower container **10***a* rests on projections (not shown) which extend inwardly from the side walls of the tank **1**A. The upper container **10***a'* rests on the lateral panels **16** of the container **10***a*.

In the machine of FIGS. 1 and 2, the orifices **17, 17'** are of circular outline and have a diameter of about 1/25 of an inch. The distance between the orifices of a row is about 2/5 of an inch, i.e., about ten times the diameter of an orifice. However, it is equally within the purview of the invention to provide the panel **15** and/or **15'** with orifices in the form of slits which extend transversely of the direction of film travel, to provide such panels with circular and slit-shaped orifices, and/or to stagger the orifices of each row in the direction of film travel.

The liquid developer which issues from the orifices **17, 17'** flows in the channel **15**A toward the platform **5** and is intercepted by a trough **18** located below the first pair of transporting rolls **3, 4**. The trough **18** has a pipe **19** which discharges the liquid into the bottom zone of the tank **1**A. The aforementioned supply conduit **10***b* for the lower container **10***a* preferably extends along one of the lateral panels **16** and through an opening or cutout in the cover **13**.

Good results were achieved with containers having a width of about 16 inches, rows of orifices with a diameter

of about 1/25 of an inch, and with liquid developer which was maintained at a pressure of about one-half atmosphere above atmospheric pressure. The films were developed rapidly and with very satisfactory uniformity.

The undulations of panels **15, 15'** contribute to rigidity of the containers **10***a*, **10***a'* which is important to insure that the containers undergo negligible deformation when they accommodate pressurized liquid. In other words, the width of constrictions in the channel **15**A changes very little or not at all, even in the regions substantially midway between the lateral panels **16**. Furthermore, each chamber can be readily cleaned because the containers **10***a*, **10***a'* are separable from each other so that the orifices **17, 17'** are accessible for periodic inspection and/or cleaning. Simplicity, ruggedness, low cost, reliability and compactness are but a few of several advantageous features of the improved developing machine.

The intercepting trough **18** serves the purpose of reducing contact between liquid developer and surrounding air. It is well known that the developer is sensitive to oxidation and, in the absence of the trough **18** and its pipe **19**, liquid issuing from the upstream end or intake end of the channel **15**A would be in long-lasting contact with air prior to entering the bottom zone of the tank **1**A. Such large-area contact between air and liquid developer would cause excessive oxidation. The trough **18** resembles a hopper or funnel and its cross-sectional area diminishes toward the upper end of the pipe **19**. This trough intercepts liquid which flows countercurrent along both sides of the film, i.e., also such liquid which is discharged by the upper orifices **17'**. On entering the trough **18**, the liquid forms a rather thick stream so that the area of contact with air is reduced to a minimum. It is preferred to provide a readily separable connection between the trough **18** and the container **10***a* and/or **10***a'* or between the trough and the tank **1**A. The top panel **15** of the lower container **10***a* preferably extends rearwardly beyond the U-shaped body **14** and is located directly above the open upper end of the trough **18**. The contact between air and liquid developer can be reduced still further if the tank **1**A accommodates a floating lid or swimmer **20** which rests on top of the body of liquid in the bottom zone of the tank. The dimensions of the swimmer **20** preferably approximate the dimensions of the space in the tank **1**A below the lower container **10***a*. This swimmer has an aperture which accommodates the pipe **19** with sufficient clearance to permit upward and downward movements of the swimmer, depending on the level of liquid in the tank **1**A.

Another mode of preventing premature oxidation of developer is to form the tank **1**A as an airtightly sealed plenum chamber and to fill the space above the liquid developer with nitrogen or other protective gas. This modification is indicated diagrammatically in FIG. 1 which shows a pipe **20**A connected to the tank **1**A and to a source **20**B of protective gas. It was found that the gas prevents penetration of oxygen into the tank **1**A even if the pressure of such gas exceeds very slightly the pressure of the surrounding atmosphere. In order to maintain such slight overpressure, the pipe **20**A contains an adjustable valve **20**C which admits small quantities of gas from the source **20**B. The valve **20**C is preferably a solenoid-operated valve which may be connected in series with the motor for the pump **10***c* so that it opens in automatic response to admission of liquid developer into the container **10***a*.

In accordance with a further modification of the present invention, the film **2** can be conveyed or transported along a substantially U-shaped path by means of transporting elements which are immersed in the liquid developer. The intensity of developing action is then reduced but is compensated for by longer-lasting contact between the film and liquid developer because the film travels along a U-shaped path.

The manner in which the film is treated by a fixer in the tank **1**B and by water in the tank **1**C is the same as described in connection with the tank **1**A and its chamber **10**.

An important advantage of our machine is that the relative speed between the liquid streams and the films **2** is very high even though the liquid streams need not be conveyed at a high speed. This is due to the fact that the liquid flows counter to the direction of film travel. Since the relative speed between the films and liquid is high even if the speed of the liquid streams is low, the machine can operate properly with pumps whose output is low. Furthermore, the upper and lower containers of the treating chambers **10, 11** and **12** can define relatively short channels because the films are subjected to intensive treatment by liquid streams which flow counter to the direction of film travel. If the channels are relatively long, the rate of film transport can be increased well beyond the rate which is permissible in presently known machines wherein the liquid flows in the direction of film travel.

Another advantage of our machine is that the width of channels between the containers of the treating chambers **10, 11, 12** varies continuously. This is particularly important in the first tank **1**A because the undulate surfaces of panels **15, 15'** insure repeated and very intensive mixing of ingredients in the liquid developer. Furthermore, and as mentioned above, the paels **15, 15'** insure very satisfactory guidance of workpieces through the respective channels. The streams issuing from the first two rows of orifices **17, 17'** center the leading edge of the film **2** in the channel **15**A as soon as the film enters by way of the intake end of the channel and is thereupon conveyed midway between the panels **15, 15'** so that each of its sides is treated with the same degree of intensity.

FIGS. 3 to 5 illustrate a portion of a second developing machine. The tank for liquid developer is shown at **101**A; this tank accommodates a chamber **110** which comprises two portions or containers **31, 31'**. The means for transporting the film **21** lengthwise through the channel **115**A between the containers **31, 31'** comprises two pairs of transporting rolls **22, 23** and **24, 25**. The lower rolls **23, 26** are fixed to gears (not shown) which mesh with gears **27, 28**, and the gears **27, 28** are respectively rigid with sprocket wheels **27**A, **28**A driven by an endless chain **30** whose upper stretch travels along a horizontal rail or a like support **29**. The chain **30** is driven by a suitable motor which is not shown in the drawing. The upper transporting rolls **22, 24** are driven by gears (not shown) which mesh with the companion gears of the lower rolls **23, 25** or rotate merely in response to frictional engagement with the lower rolls and/or film **21**. The drive for the transporting rolls is preferably installed externally of the tank **101**A. The chain **30** can be employed to drive only the transporting rolls of the tank **101**A or to drive the transporting rolls of the adjoining tank or tanks corresponding to the tanks **1**B, **1**C of FIG. 1.

The containers **31, 31'** are mounted in the space **26** between the two pairs of transporting rolls. The container **31** is mirror symmetrical to and is practically identical with the container **31'**. The following part of this description will refer mainly to the lower container **31** with the understanding, however, that the upper container **31'** is of identical or substantially identical design; its parts are denoted by similar numerals each followed by a prime.

The container **31** comprises a trough-shaped main body portion **31**A which preferably consists of synthetic plastic material and is provided with a transversely extending internal partition **31***a* located between the front and rear panels **31***f*, **31***d* but closer to the front panel **31***f*. In accordance with a presently preferred embodiment of the invention, the distance between the partition **31***a* and the front panel **31***f* is substantially half the distance between the partition **31***a* and rear panel **31***d*. The partition divides the interior of the container **31** into a compartment or duct **31***b* for liquid developer and an unused compartment **31***c* which is sealed against entry of developer. The compartment **31***c* is sealed from above by a top panel **32**. It was found that the amounts of

liquid developer which can be furnished by the compartments or ducts **31***b*, **31***b'* are amply sufficient to insure rapid treatment of film **21** which advances through the channel **115**A.

The bottom portion of the duct **31***b* is bounded by a V-shaped surface **31***e* which defines a transversely extending groove. An insert **33** of thin sheet metal has a portion which overlies the surface **31***e* and whose marginal portions are bent to form two transversely extending flaps. The material of the insert **33** is elastic and rustproof (for example, metallic sheet stock known as V4A). Combined deforming or anchoring means including one or more screws **34** is provided to secure the insert **33** to the main body portion **31**A and to deform that portion of the insert which overlies the surface **31***e*. The screws **34** can be reached at the outer side of the container **31** to facilitate adjustment and hence the extent of deformation of the insert **33**. When the screws **34** are tightened, that portion of the insert **33** which is adjacent to the front panel **31***f* pivots along the edge **33***b* and moves away from the front wall.

A second insert **35** of thin sheet metal is screwed or otherwise affixed to the top panel **32** at a level above the partition **31***a*. The unattached portion of the insert **35** extends forwardly, first in substantial parallelism with and thereupon toward the path for the film **21**. The inserts **35**, **35'** define a constriction of the channel **115**A and thereupon flare outwardly (away from the film path) to define with the adjoining flaps **33***a*, **33***a'* of the inserts **33**, **33'** two transversely extending slit-shaped orifices **117**, **117'** which discharge liquid developer from the ducts **31***b*, **31***b'* into the channel **115**A in such a way that the developer flows counter to the direction of film travel and along both sides of the film **21**. The foremost end portions of the inserts **35**, **35'** make with the plane of film **21** an angle of about 25 degrees. These foremost portions are located past the bends **35***a*, **35***a'* in the inserts **35**, **35'**. The length of overlap between the inserts **33**, **35** and **33'**, **35'** exceeds the height of orifices **117**, **117'**. The overlapping portions of these inserts are substantially parallel to each other. They insure that the liquid developer issues in predetermined directions and that the angle between the streams and the plane of film **21** remains substantially constant. The length of overlap between the inserts **33**, **35** or **33'**, **35'** does not exceed the distance between the bend **35***a* or **35***a'* and the intake end of the respective orifice **117** or **117'**. If the flap **33***a* or **33***a'* is pivoted in response to rotation of the screws **34** or **34'**, the width of the orifice **117** or **117'** can be increased or reduced. Similar adjustments can be achieved by mounting the inserts **33**, **33'** or **35**, **35'** for movement toward and away from the plane of film **21**. If the inserts **33**, **33'** are movable at right angles to the film plane, the planes of the front panels **31***f*, **31***f'* are preferably normal to the film path.

The ducts **31***b*, **31***b'* are accessible for cleaning in response to removal of the inserts **35**, **35'**. The edges of the panels **31***d*, **31***f* and **31***d*, **31***f'* extend beyond the respective top panels **32**, **32'** (in a direction toward the film **21**) to form two additional constrictions at the two ends of the channel **115**A. The width of these constrictions is less than that of the constriction between the inserts **34**, **35'**.

The main body portion **31**A' of the upper container **31'** carries a doctor blade or wiper **41** which extends close to the periphery of the transporting roll **22** and is secured to the container **31'** by a plate **35**A and one or more screws **40**. The wiper **41** preferably consists of elastic synthetic plastic material and its purpose is to remove liquid developer from the roll **22**.

FIG. 4 shows the container **31** from above with the inserts **33**, **35** omitted. This illustration further shows a portion of the means for supplying liquid developer to the compartment or duct **31***b*. Tapped holes **31***g* and **31***h* are provided in the main body portion **31**A to accept screws which hold the top panel **32** (not shown). The screw which enters the hole **31***h* simultaneously holds the insert **35**. The tapped hole **31***i* receives one of the screws **34** for the insert **33**.

The liquid supplying means includes a rectangular part of the main body portion **31**A which accommodates a plastic block **36** of rectangular outline provided with a large-diameter passage **36***a* extending at right angles to the plane of film **21**. This passage **36***a* is formed in the central portion of the block **36** and communicates with a radially extending port or passage **36***b* of identical diameter. The port **36***b* communicates with one end of the duct **31***b* by way of a suitable cutout which extends longitudinally of the container **31**. The block **36** also serves as a means for preventing entry of liquid developer into the compartment **31***c*. The bottom panel of the main body portion **31**A has a passage **31***k* which communicates with the passage **36***a*. The passage **31***k'* in the bottom wall of the main body portion **31**A' has a diameter which is considerably less than that of the passage **36***a'* in the block **36'** (see FIG. 5).

The remaining parts of the supplying means for liquid developer are shown in FIG. 5. The tank **101**A has a bottom wall **42** provided with a hole **42***a* for a supply conduit **37**. The conduit **37** has a shoulder **37***a* which abuts against the bottom wall **42**. That portion of the conduit **37** which extends downwardly and beyond the hole **42***a* is threaded, as at **37***b*, to take a nut **38** which fixes the conduit in requisite position with reference to the tank **101**A. The lower end portion of the conduit **37** is connected with a liquid-circulating pump by means of a hose, not shown. Such pump corresponds to the pump **10***c* shown in FIG. 1.

The upper end portion of the supply conduit **37** has a counterbore **37***c* for a thin-walled sleeve **39** which is glued to the conduit and has two cutouts **39***b*, **39***b'* which respectively register with ports **36***b*, **36***b'*. The external diameter of the sleeve **39** equals the diameters of passages **36***a*, **36***a'* in the blocks **36**, **36'**. The lower container **31** surrounds the sleeve **39** and rests on the top face of the supply conduit **37**. The container **31'** rests on top of the container **31**, i.e., the blocks **36**, **36'** abut against each other and these blocks thus determine the width of aforementioned constrictions between the panels **31***d*, **31***d'* and **31***f*, **31***f'*. The passage **31***k'* accommodates the stem of a screw **43** which meshes with a plug **39***a* in the upper end of the sleeve **39** and holds the blocks **36**, **36'** against movement away from each other.

The liquid developer flows upwardly through the supply conduit **37** and through cutouts **39***b*, **39***b'* of the sleeve **39** to enter the ducts **31***b*, **31***b'* by way of the ports **36***b*, **36***b'*. The cutouts **39***b*, **39***b'* may but need not be of identical size. Their size depends on whether it is desired to supply to the ducts **31***b*, **31***b'* equal or different quantities of liquid developer per unit of time. The sleeve **39** may accommodate a fitting angularly and/or axially adjustable metering sleeve (not shown) which can overlie larger or smaller portions of cutouts **39***b*, **39***b'* to thus regulate the rate of liquid admission to the ducts **31***b*, **31***b'*. Such metering sleeve can be provided with a relatively wide slot or cutout in the region of the upper cutout **39***b'* and with a smaller-diameter portion in the region of the cutout **39***b* to insure that the liquid develops a pressure head before it enters the duct **31***b* and/or **31***b'*.

The operation of the machine which embodies the structure of FIGS. 3 to 5 is as follows:

The leading end of the film **21** is introduced between the transporting rolls **22**, **23** which advance the film through the channel **115**A and into the range of transporting rolls **24**, **25**. A pump (not shown) supplies liquid developer into the lower end of the conduit **37**. The liquid enters the sleeve **39** and flows through the cutouts **39***b*, **39***b'* and ducts **31***b*, **31***b'* to enter the channel **115**A by way of the orifices **117**, **117'** in a direction counter to that in which the film **21** is transported by the rolls **22**–**25**. The film has a certain stiffness which suffices to insure that its leading end does not abut against the panel **32** or **32'** as soon as it advances beyond the constriction between the rear panels

31*d*, 31*d*'. Thus, the film is immediately flanked by two liquid streams which insure that the surfaces of the film remain out of contact with the containers **31, 31'**. The constriction between the inserts **35, 35'** serves to center the leading edge of film **21** in the corresponding portion of the channel **115**A; such constriction (in the zone between the bends **35***a*, **35***a*') further prevents entry of the leading edge into one of the orifices **117, 117'**. The edges of the flaps **33***a*, **33***a*' are more distant from the film path than the bends **35***a*, **35***a*'; this also contributes to proper guidance of the leading edge of film **21** past and beyond the orifices.

The liquid issues from the channel **115**A in the space between the rear panels **31***d*, **31***d*' and the wiper **41** insures that the liquid cannot flow all around the upper transporting roll **22**. Such liquid descends into the bottom zone of the tank **101**A by flowing along the edges of the film **21**.

Since the ducts **31***b*, **31***b*' take up only a small portion of the volume of the containers **31, 31'**, the operation of this machine is very economical and the machine is set for operation within a short interval of time following admission of liquid into the lower end of the supply conduit **37**. This is of particular importance when the liquid is a developing solution which has a tendency to oxidize on contact with air. The efficiency of the machine is much higher than that of machines wherein the liquid flows in the direction of film transport. It was further found that liquid which flows countercurrent to the direction of film travel does not interfere with the transport of film through the channel **115**A.

It will be noted that each of the containers **31, 31'** has a single orifice which is adjacent to the discharge end of the channel **115**A (i.e., to that end at which the film issues from the channel). Furthermore, the size of the orifice **117** or **117'** can be changed to convert the machine of FIGS. 3 to 5 for treatment of different types of films. The cross-sectional area and the orientation of the orifice or orifices, combined with the output of the pump, determines the strength and the direction of liquid flow in the respective channel. As stated before, the cross-sectional area of the orifices **117, 117'** can be adjusted by way of the inserts **33, 33'** and/or **35, 35'**. Such adjustability enables the operators to select the intensity of treatment as a function of the type of film as well as in dependency on the output of the pump which delivers liquid to the conduit **37**. Furthermore, the orifices **117, 117'** can be cleaned without necessitating removal of the inserts **33, 33'** and/or **35, 35'**. As a rule, impurities which might accumulate in the conduit **37**, sleeve **39**, blocks **36, 36'**, ducts **31***b*, **31***b*' and/or orifices **117, 117'** can be expelled by increasing the width of orifices to a maximum value and by mechanically removing impurities which are intercepted between the inserts **33, 35** or **33', 35'**.

Without further analysis, the foregoing will so fully reveal the gist of the present invention that others can, by applying current knowledge, readily adapt it for various applications without omitting features which fairly constitute essential characteristics of the generic and specific aspects of our contribution to the art and, therefore, such adaptations should and are intended to be comprehended within the meaning and range of equivalence of the claims.

What is claimed as new and desired to be protected by Letters Patent is set forth in the appended claims:

1. In a machine for liquid treatment of sheet-like workpieces, particularly for developing of exposed photographic films, a combination comprising transporting means for advancing workpieces along a predetermined path and in a predetermined direction; a treating chamber defining a channel through which the workpieces advance during travel along said path, said chamber comprising two hollow containers respectively located above and below said path and said containers including panels flanking said channel from above and from below and each having at least one liquid-discharging orifice for directing a stream of liquid into said channel so that the liquid flows along the respective side of the workpiece in said channel and counter to said predetermined direction, at least a portion of the interior of each of said containers being in communication with the respective orifice and said containers further having abutting lateral panels; tank means accommodating said chamber and arranged to collect liquid which issues from said channel; means for supplying liquid into said chamber, including means for withdrawing liquid from said tank means and conduit means for admitting the thus withdrawn liquid into said containers; a lid arranged to float upon and to substantially cover the liquid which accumulates in said tank means; and pipe means arranged to convey liquid from said channel into the bottom zone of said tank means, said pipe means extending with clearance through an aperture provided in said lid.

2. In a machine for liquid treament of sheet-like workpieces, particularly for developing of exposed photographic films, a combination comprising transporting means for advancing workpieces along a predetermined path and in a predetermined direction; a treating chamber defining a channel through which the workpieces advance during travel along said path, said chamber comprising first and second containers respectively located above and below said path and having portions flanking said channel from above and having portions flanking said channel from least one liquid-discharging orifice for directing a stream of liquid into said channel so that the liquid flows along the respective side of a workpiece in said channel and counter to said predetermined direction, each of said containers further having an internal partition dividing its interior into a pair of compartments one of which communicates with the respective orifice, the volume of the other compartment of each of said pairs exceeding the volume of said one compartment and said containers further comprising means for sealing said other compartments from liquid; and means for supplying liquid to said one compartment of each of said containers.

3. A combination as defined in claim **2**, wherein at least one of said orifices is an elongated slit extending transversely of said channel and wherein the respective container further comprises means for adjusting the effective width of said slit, said adjusting means comprising a member detachably secured to the partition of the corresponding container.

4. In a machine for liquid treatment of sheet-like workpieces, particularly for developing of exposed photographic films, a combination comprising transporting means for advancing workpieces along a predetermined path and in a predetermined direction; a treating chamber defining a channel through which the workpieces advance during travel along said path, said chamber comprising a pair of containers respectively located above and below said path and having portions flanking said channel from above and from below, each of said portions having at least one liquid-discharging orifice for directing a stream of liquid into said channel so that the liquid flows along the respective side of a workpiece in said channel and counter to said predetermined direction; tank means accommodating said containers; means for supplying liquid to said containers, including a substantially upright supply conduit extending upwardly through said tank means and arranged to feed liquid into passages provided in said containers in communication with the respective orifices, and a sleeve fitted into said conduit and extending into said containers to supply liquid to said passages, said sleeve having a closed end; and means for securing said containers to said conduit, including means for connecting the closed end of said sleeve to the upper one of said containers.

5. In a machine for liquid treatment of sheet-like workpieces, particularly for developing of exposed photographic film, a combination comprising transporting means for advancing workpieces along a substantially horizontal path and in a predetermined direction; a treating chamber defining a channel through which the workpieces advance

during travel along said path, said channel having a receiving end and a discharging end located past said receiving end as considered in said predetermined direction and said chamber comprising portions flanking said channel from above and from below, each of said portions having at least one liquid-discharging orifice for directing a stream of liquid into said channel so that the liquid flows along the respective side of a workpiece in said channel and counter to said predetermined direction, all of said orifices being disposed nearer to said discharging end than to said receiving end and each thereof constituting an elongated slit extending transversely of said predetermined direction; means for supplying liquid to said chamber; and adjusting means for adjusting the effective width of at least one of said orifices, said chamber comprising two containers which are substantially mirror symmetrical with reference to the plane of said path and each of said portions forming part of a different one of said containers, said adjusting means comprising a pair of inserts flanking an orifice whose effective width is to be adjusted and means for moving at least a portion of at least one of said inserts with reference to the other insert to thereby change the effective width of said last mentioned orifice.

6. A combination as defined in claim **5**, wherein said

orifices are substantially mirror symmetrical to each other with reference to said plane.

7. A combination as defined in claim **5**, wherein at least one of said inserts consists of elastic sheet material.

8. A combination as defined in claim **7**, wherein said moving means is arranged to deform said one insert.

References Cited

UNITED STATES PATENTS

3,413,904	12/1968	Friedel	95—96 X
2,359,611	10/1944	Bolsey	95—97 X
2,710,832	6/1955	Harr	95—89 UX
3,143,056	8/1964	Limberger	95—89
3,192,846	7/1965	Wright	95—89 X
3,344,729	10/1967	Kitrosser	95—89
3,348,526	10/1967	Neubauer	118—410
3,372,630	3/1968	Schmidt	95—94
3,405,626	10/1968	Fleisher et al.	95—94
3,405,627	10/1968	Day et al.	95—94
3,461,788	8/1969	Tiger et al.	95—89 X
3,461,843	8/1969	Noon	95—89 X

SAMUEL S. MATTHEWS, Primary Examiner

F. L. BRAUN, Assistant Examiner