Feb. 13, 1940. C. VON DEN STEINEN 2,190,617

STABILIZING DEVICE FOR SHIPS

Filed Jan. 18, 1938 2 Sheets-Sheet 1

Fig.1

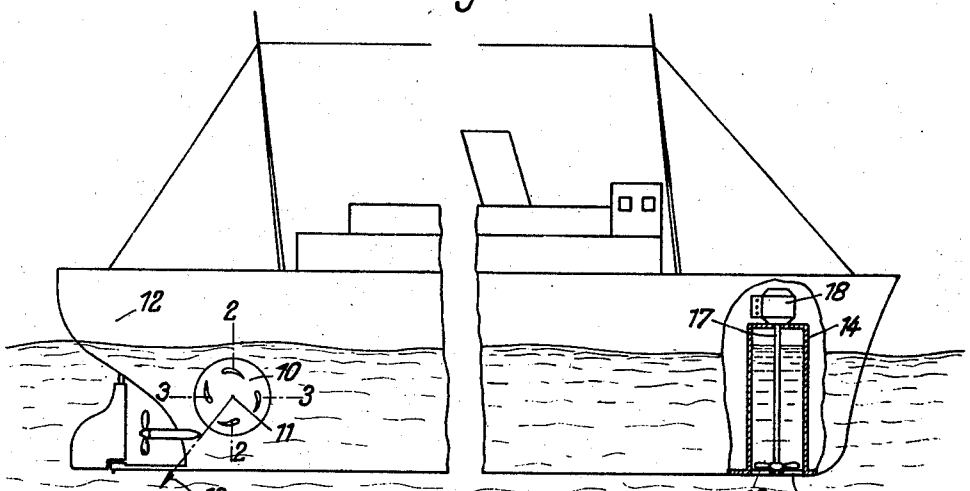

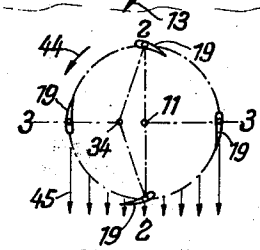

Fig.3

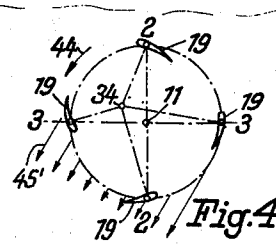

Fig.4

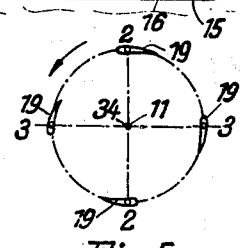

Fig.5

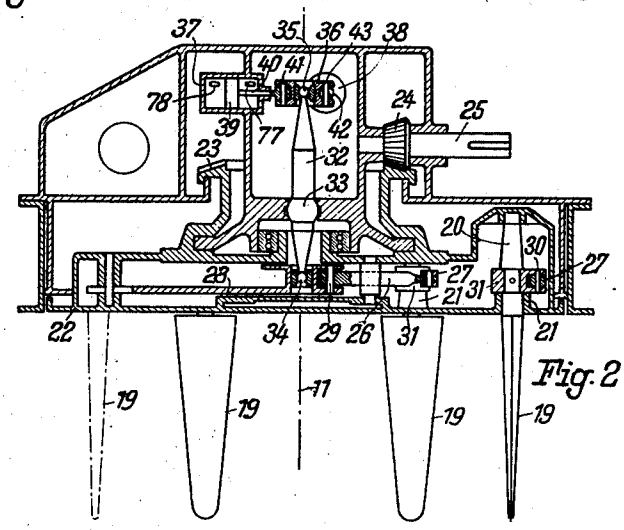

Fig.2

Inventor:

Carl von den Steinen

Feb. 13, 1940. C. VON DEN STEINEN 2,190,617

STABILIZING DEVICE FOR SHIPS

Filed Jan. 18, 1938 2 Sheets-Sheet 2

Fig. 6

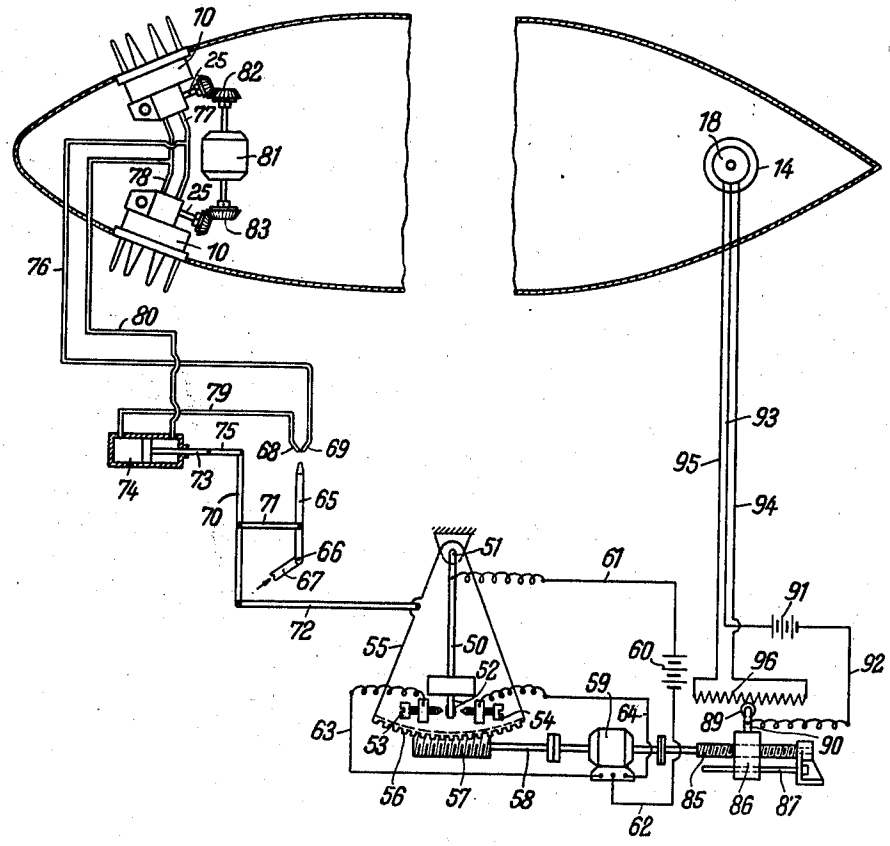

Inventor:

Carl von den Steinen

Patented Feb. 13, 1940 2,190,617

UNITED STATES PATENT OFFICE

2,190,617

STABILIZING DEVICE FOR SHIPS

Carl von den Steinen, Hamburg-Bergedorf, Germany, assignor to Askania-Werke A. G., a corporation of Germany

Application January 18, 1938, Serial No. 185,580
In Germany January 18, 1937

3 Claims. (Cl. 114—122)

This invention relates to stabilizing devices for ships, more particularly to anti-pitching devices.

It is an object of this invention to provide in a ship a reliable and effective device for counteracting pitching movements.

It is a further object of this invention to provide a power actuated device which will not only stabilize the ship but also exert a propelling force on the same.

According to this invention I provide in a ship near one end of the ship's body a Schneider propeller having a substantially horizontal axis of rotation and blades which are adjusted in response to pitching movements of the ship.

The Schneider type of propeller is well known in the art and described, for example, in my copending application Ser. No. 184,492 filed January 11, 1938.

The Schneider propeller, briefly described, consists of a plurality of blades which are adjustably mounted on a rotatable support and which extend into the water substantially parallel to the axis of rotation of the support. As it is well known in the art, forces will be exerted by the propeller blades on the surrounding water in any desired direction depending upon the adjustment of the blades relatively to the support. Thus by positioning a Schneider propeller near one end of the ship, the propeller will both propel the ship and stabilize the same when adjusted in response to the pitching movements of the ship.

Further aims, objects and advantages of this invention will appear from a consideration of the description which follows with the accompanying drawings showing for purely illustrative purposes an embodiment of this invention. It is to be understood, however, that the description is not to be taken in a limiting sense, the scope of this invention being defined in the appended claims.

Referring to the drawings:

Fig. 1 is a sectional elevation of a ship equipped with a Schneider propeller according to this invention.

Fig. 2 is a sectional view of a Schneider propeller.

Figs. 3 to 5 are diagrammatic illustrations of the operation of the Schneider propeller in different adjustments.

Fig. 6 is a diagram showing one form of apparatus for controlling the Schneider propeller in response to pitching movements of the ship.

In Fig. 1 a Schneider propeller 10 is mounted with the axis of rotation 11 substantially horizontal near the rear end of the ship's body 12. It is easily apparent that a force exerted by the propeller in the direction of the arrow 13 will tend to lift the ship's stern out of the water and at the same time propel the ship, while an oppositely directed force will tend to draw the stern into the water. By adjusting the Schneider propeller in a manner hereinafter more fully described, the ship will accordingly be stabilized against pitching movements by moments exerted about a transverse axis of the ship.

For assisting the dynamic stabilizing action of the Schneider propeller a further stabilizing device operating on the static principle is shown in the illustrated example at the front part of the ship. A compartment 14, open at the bottom 15, may be filled with water by means of a propeller 16 secured to a shaft 17 and driven by a reversible motor 18, the motor being controlled in a manner hereinafter more fully explained. When the water level in the compartment rises above the level of the surrounding water a downwardly directed force will be exerted on the ship stabilizing the same. Conversely, the front part of the ship will be lifted out of the water when water is discharged from the compartment to assume a level below that of the surrounding water.

The Schneider propeller diagrammatically indicated at 10 is shown in greater detail in Fig. 2. A plurality of blades 19 having shafts 20 are adjustably mounted in bearings 21 of a rotatable support 22. For rotating the support about the axis 11 the support is provided with a bevel gear 23 driven by a pinion 24 on a shaft 25. For adjusting the blades relatively to the support levers 26, 27 are provided, the levers 26 pivotally connected to a center part 28 at 29 and the levers 27 linked at 30 to webs 31 secured to the shafts 20. By displacing the center of the part 28 relatively to the axis 11, the blades may be adjusted into different positions. For displacing the part 28 a lever 32 is provided universally mounted at 33 and engaging the part 28 at 34. The second arm of the lever 32 is universally mounted at 35 in a head 36.

Two servo-motors 37 and 38 are provided for moving the lever 32 into any desired direction. The servo-motor 37 includes a piston 39, the piston rod 40 of which is pivotally connected to the head 36 at 41. The piston rod 42 of the second servo-motor 38 is linked to the head at 43.

For understanding the present invention it is sufficient here to state that the servo-motor 38 controls the magnitude of the pitch of the blades, thereby varying the magnitude of the propeller force. The servo-motor 37 controls the direction of the force exerted by the propeller and is con-

trolled in a manner more fully described hereinafter in connection with Fig. 6.

When the center 34 is displaced relatively to the axis 11 in the direction of the axis 3—3 (Fig. 3), the blades 19 rotating in the direction of the arrow 44 will exert a force on the water as indicated by the arrows 45, parallel with the axis 2—2. The propeller 10 of the ship adjusted as shown in Fig. 3 will accordingly exert a force on the water in the direction of the axis 2—2 tending to lift the stern out of the water.

In Fig. 4 a different adjustment of the blades is shown in which the center 34 of the member 23 is moved into a position between the axes 2—2 and 3—3. In this adjustment a force exerted by the propeller blades will be in the direction of the arrows 45'.

The propeller adjusted as shown in Fig. 5 in which the center 34 and the axis 11 coincides will exert no force on the water, the blades rotating idle.

A suitable form of apparatus for controlling the Schneider propeller and the servo-motor 18 of an additional stabilizing apparatus is shown in Fig. 6. A device responsive to longitudinal inclinations of the ship is shown in the illustrated embodiment as being a pendulum 50. The pendulum may be of the short or long period type, the former responsive to deviations from the direction of the apparent, the latter responsive to deviations from the true vertical. The pendulum 50 is mounted on the ship at 51 for oscillation parallel with the longitudinal axis of the ship. Contacts 52 on the pendulum are movable between contacts 53 and 54 of a follower member 55, also pivotally mounted at 51. The follower member is provided with a toothed edge 56 meshing with a worm 57 on a shaft 58 driven by a reversible motor 59. The motor is supplied with energy from a source 60 one terminal of which is connected to the pendulum through a lead 61, the other terminal being connected to the motor through a lead 62. The contacts 53 and 54 are connected with the motor through leads 63 and 64, respectively.

When in response to pitching movements of the ship a relative displacement between the pendulum 50 and the follower member 55 occurs, one of the pair of contacts 52, 53 or 52, 54 will be closed causing the motor 59 to move the follower member into alignment with the pendulum. The position of the follower member thus becomes a measure of the longitudinal inclination of the ship.

By the follower member 55 a relay is controlled, in the illustrated embodiment shown as being of the Askania jet-pipe type and including a movable jet-pipe 65 pivoted at 66 and supplied with pressure fluid through a conduit 67. The jet-pipe issues a jet of pressure fluid into reception orifices 68 and 69 depending upon the relative position of the jet-pipe and the orifices. The jet-pipe 65 is connected to a double-armed lever 70 through a link 71, one arm of the lever 70 being connected to the follower member through a link 72. The second arm of the lever 70 is connected with a piston rod 73 of a repeater servo-motor 74 through a link 75.

Pressure fluid entering the reception orifices 69 is conducted to the servo-motor 37 (Fig. 2) of the Schneider propeller 10 through a conduit 76. The servo-motors of the two propellers are being connected parallel through conduits 77 and 78.

Pressure fluid entering the reception orifices 68 is conducted to the repeater motor 74 through a conduit 79, and thence to the conduit 78 through a further conduit 80.

It thus appears that the blades of the propellers 10 will be adjusted by the relay 65 in response to longitudinal inclinations of the ship, the movements of the servo-motor 37 being repeated by the servo-motor 74 for the purpose of exerting a restoring action of the relay to prevent a hunting and overshooting of the device.

The shafts 25 of the Schneider propeller are jointly driven by a motor 81 over gears 82 and 83. The operation of the device so far described is as follows:

When an inclination of the ship occurs causing a movement of the pendulum to the right, the follower member 55 will cause the jet-pipe to register with the orifice 69, whereby a pressure is created in the conduits 76, 77 actuating the servo-motors 37 (see Fig. 2) for adjusting the blades of the propellers 10. Pressure fluid returning from the servo-motors 37 moves the piston of the repeater servo-motor 74 to the left thereby restoring the relay 65 to its neutral position in a well known manner. The propellers 10 with their blades adjusted into a position in response to the inclination of the ship will thus exert a force on the same for stabilizing it as hereinbefore explained in connection with Fig. 1.

For operating the servo-motor 18 of the static device 14 in response to the inclinations of the ship, the above mentioned servo-motor 59 is connected with a threaded spindle 85 upon which a nut 86 travels. The nut is prevented from turning by a guiding rod 87. A contact roller 89 is rotatably mounted on an arm 90 of the nut 86, the roller being connected to a battery 91 through a lead 92. The second terminal of the battery 91 is connected to the motor 18 through a lead 93. Leads 94 and 95 connect the motor 18 with the axes of a variable resistance 96.

In its normal position shown in the drawings in which the roller is in connection with the center of the resistance 96, equal E. M. F.'s will be impressed on the servo-motor 18 through leads 94 and 95 and the motor be at rest. Upon inclination of the ship the roller 89 will move towards one end of the resistance 96 causing the motor 18 to turn in one direction or the other and exerting a stabilizing action on the ship in a manner described in connection with Fig. 1.

Obviously, the present invention is not restricted on the particular embodiment herein shown and described. Other forms of inclination responsive devices may be used. Moreover, it is not indispensable that all features of this invention be used conjointly, since they may advantageously be employed in various combinations and subcombinations.

What is claimed is:

1. The combination with a ship's body of a Schneider propeller including a plurality of blades and a rotatable support for said blades on which said blades are adjustably mounted substantially parallel with the axis of said support, said Schneider propeller being mounted on said body near one end thereof and with the axis of rotation substantially horizontal and transverse to the ship's longitudinal axis; means for driving said propeller; and means responsive to the pitching oscillations of the ship for automatically controlling the adjustment of said blades relatively to said support according to the phase of said pitching oscillations, whereby forces will be exerted on the ship by the propeller counter-

acting pitching movements and stabilizing the same.

2. The combination with a ship's body of two Schneider propellers, each propeller including a plurality of blades and a rotatable support for said blades on which said blades are adjustably mounted substantially parallel with the axis of rotation of said support, one Schneider propeller being mounted on the starboard, the other on the port side of said body and near one end thereof with the axes of rotation substantially horizontal; power means connected jointly to drive both propellers; and means responsive to the pitching oscillations of the ship for automatically controlling the adjustment of the blades of both propellers relatively to said support according to the phase of said pitching oscillations, whereby vertical forces will be exerted on the ship by the propellers counteracting pitching movements and stabilizing the same.

3. The combination with a ship's body of two Schneider propellers, each propeller including a plurality of blades, a rotatable support for said blades on which said blades are adjustably mounted substantially parallel with the axis of rotation of said support, and a servo-motor for adjusting said blades, one Schneider propeller being mounted on the starboard, the other on the port side of said body and near one end thereof with the axes of rotation substantially horizontal; power means connected jointly to drive both propellers; means forming a compartment near the other end of the body and communicating with the surrounding water; a propeller in said compartment for forcing water into and out of it; a reversible servo-motor for driving said propeller last mentioned; and means responsive to longitudinal inclinations of the ship for controlling said reversible servo-motor in either direction and the adjustment of said Schneider propeller so as to change the inclination of the Schneider propeller's thrust in a substantial vertical plane against the horizontal, whereby forces will be exerted on the ship counteracting pitching movements and stabilizing the same.

CARL VON DEN STEINEN.