July 26, 1966 A. W. KINGSBURY 3,262,396

SLURRY PUMP

Filed Nov. 9, 1964 2 Sheets-Sheet 1

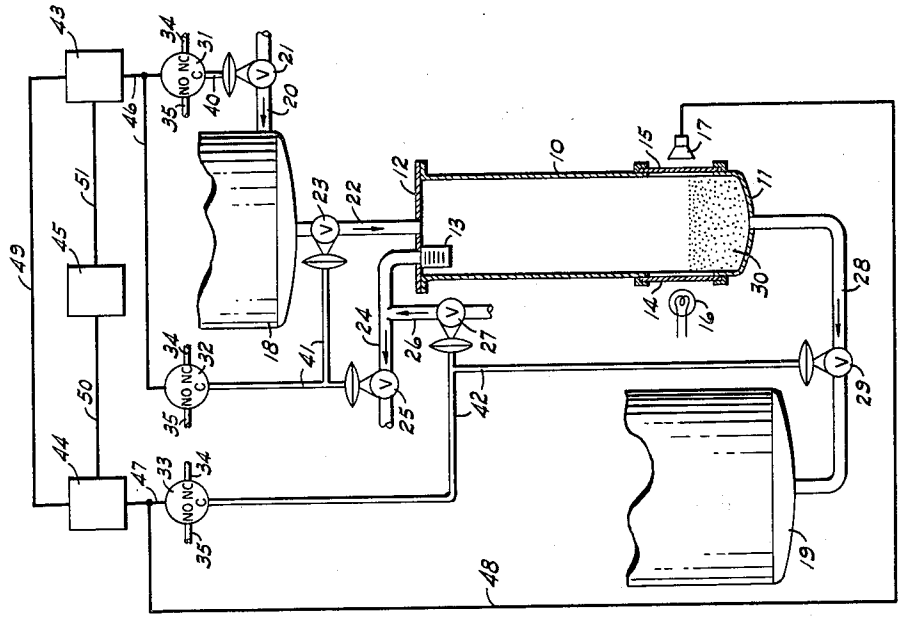

FIG. - 1

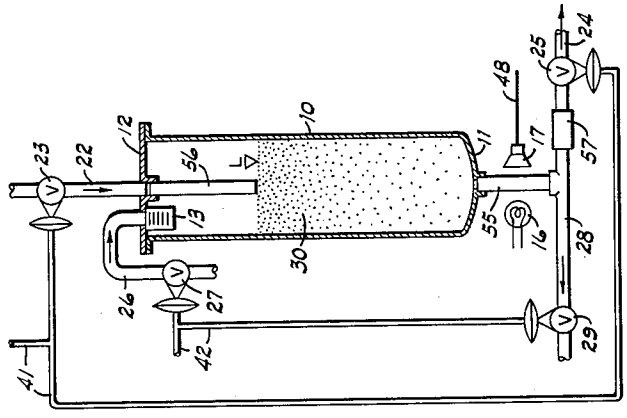

FIG. - 2

July 26, 1966 A. W. KINGSBURY 3,262,396

SLURRY PUMP

Filed Nov. 9, 1964 2 Sheets-Sheet 2

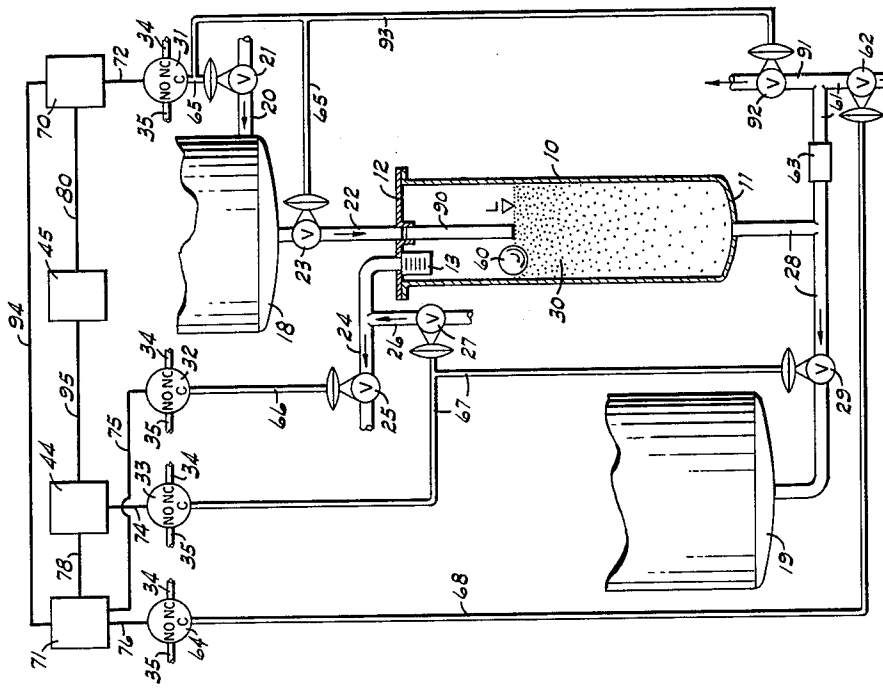

FIG.-4

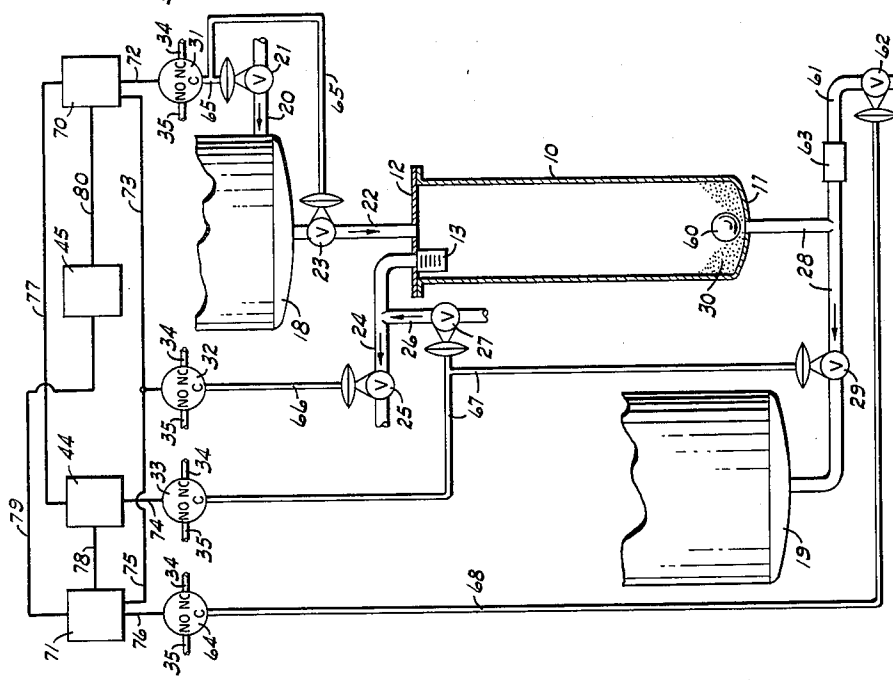

FIG.-3

United States Patent Office 3,262,396 Patented July 26, 1966

3,262,396

SLURRY PUMP

Albert William Kingsbury, Moorestown, N.J., assignor to Pfaudler Permutit, Inc., Paramus, N.J., a corporation of New York

Filed Nov. 9, 1964, Ser. No. 409,765
9 Claims. (Cl. 103—240)

This invention relates to a pump for slurry consisting of a granular solid and a liquid, and it comprises a pump chamber, a slurry supply tank, a slurry receiving tank, a pipe interconnecting said supply tank and a supply of liquid, a pipe interconnecting said supply tank and said pump chamber, a pipe interconnecting said pump chamber and a point of disposal, a pipe interconnecting said pump chamber and a supply of liquid, a pipe interconnecting said receiving tank and said pump chamber, valve means in each of said pipes, control means for the valve means in the first named three pipes, other control means for the valve means in the last named two pipes, and timing means adapted to actuate said control means to alternately open the valve means in the first named three pipes and those in the last named two pipes, all as more fully set forth hereinafter and as claimed.

In many industrial processes it is necessary to transfer predetermined quantities of slurry from one tank to another. Thus, in modern liquid treatment, as for instance water softening by ion exchange, a slurry of resin is transferred in controlled quantities from a treatment tank to a regenerator, thence to a rinse tank and finally back to the treatment tank. However, this application for a slurry pump has been referred to by way of example only as the requirement to transfer predetermined quantities of slurries exists in other fields as well. Conventional pumps are generally not suitable for such transfer.

It is an object of this invention to provide an effective and reliable pump which transfers a predetermined quantity of slurry in each operating cycle.

Another object is to provide a pump operating in cycles of alternately introducing slurry into and withdrawing slurry from a pump chamber, with means for controlling each step of the cycles.

Still another object is to provide control means by which the step of withdrawing slurry from the pump chamber is terminated by the disappearance of slurry from a predetermined location in the pump.

Other objects, novel features and advantages will appear from the following description.

The manner in which these objects are achieved is shown in the appended drawings in which:

FIG. 1 is a more or less diagrammatic showing in elevation and partly in cross section of one embodiment of my invention;

FIG. 2 is a fractional view showing a modification of a portion of the apparatus shown in FIG. 1;

FIG. 3 is a view, similar to FIG. 1, of another embodiment of my invention; and

FIG. 4 is a view of a modification of the pump shown in FIG. 3.

Referring now to FIG. 1, my novel pump has a pump chamber **10** with a dished bottom **11** and a top **12** to which is attached a strainer **13**. On opposite sides the pump chamber **10** has oblong transparent windows **14** and **15**. Adjacent to window **14** is a light source **16** and adjacent to window **15** is a photoelectric cell **17**. The source **16** thus projects light through the windows **14** and **15** and the interior of the pump chamber **10** towards the photoelectric cell **17** which is provided with a switch which is closed when slurry between windows **14** and **15** obstructs the light projected towards the cell **17**, and which opens when light from source **16** reaches the cell **17** upon the disappearance of slurry. The apparatus includes a slurry supply tank **18** and a slurry receiving tank **19**.

A pipe **20** with valve **21** leads from a supply of liquid under pressure (not shown) to the supply tank **18**. A pipe **22** with valve **23** interconnects the bottom of supply tank **18** and the top **12** of the pump chamber **10**. A pipe **24** with valve **25** leads from the strainer **13** to a point of disposal for liquid. A pipe **26** with valve **27** leads from supply of liquid under pressure to the pump chamber **10**, being conveniently joined to pipe **24**, as shown. A pipe **28** with valve **29** interconnects the lowest point of the sloping bottom **11** of the pump chamber **10** with the slurry receiving tank **19**. The numeral **30** refers to slurry in the pump chamber **10**.

The main valves **21**, **23**, **25**, **27** and **29** have operators for controlling their opening and closing, preferably in the form of diaphragm chambers as shown, which include a spring urging them to valve closing position and which are adapted to open the valve on admission of fluid under pressure to the diaphragm chamber and close the valve when the diaphragm chamber is vented. Valves **23** and **29** which handle slurry should be, and the other main valves may be of a type which has a minimum of tortuous passages in which solids from the slurry may settle out, accumulate and thus obstruct free flow through the valve when it is open; they should, furthermore, not have a member movable towards and away from a seat because solid particles from the slurry may get caught between such seat and movable member and thereby interfere with tight closing. Valves of the type generally known as ball valves meet these requirements and are well suited for use in my slurry pump.

The control means for the main valves include solenoid pilot valves **31**, **32** and **33**. These are of the so-called three-way type, as for example shown in U.S. Patent 2,614,584 dated October 21, 1952. Each of these solenoid valves **31**, **32** and **33** has a common port and connection C, a normally closed port and connection NC connected by a pipe **34** to a source of fluid under pressure and a normally open port and connection NO connected by a pipe **35** to a point of disposal for pressure fluid. The pressure fluid supplied to pipes **34** may be a liquid, for instance water, or it may be a gas, as for example air. In the latter case the pipes **35** may simply be vented to the atmosphere. When the fluid is a liquid the pipes **35** lead to a suitable point of disposal. Such liquid may, of course, be recovered for re-use. The common port C of solenoid valve **31** has a connection **40** with main valve **21**, that of solenoid valve **32** has a connection **41** with branches leading to main valves **23** and **25**, and that of solenoid valve **33** has a connection **42** with branches leading to main valves **27** and **29**. Thus, when any one of the solenoid valves **31**, **32** and **33** is de-energized the diaphragm chamber of the main valve with which it is connected is vented through the communicating ports and connections C and NO, and the main valve stays closed. When the solenoid valve is energized or activated pressure fluid is admitted to the diaphragm chamber of the main valve through the communicating ports and connections C and NC and the main valve opens, remaining open as long as the solenoid valve remains energized, and closing upon de-energization of the solenoid valve.

Timing means are provided to alternately energize solenoid valves **31** and **32** on the one hand and solenoid valve **33** on the other hand. These timing means include time switches **43** and **44** and a counter **45**. The time switches **43** and **44** are of the type which upon motivation maintains its switch closed for a predetermined and adjustable interval of time and thereupon opens its switch and sends out an impulse or signal, holding itself ready to repeat this performance upon re-motivation.

The counter 45 is of the type which counts and registers the impulse it receives and which is capable of passing on an impulse for everyone received up to a preset and adjustable number of impulses received, and of repeating this performance upon re-motivation or re-setting.

The time switch 43 has a connection 46 to solenoid valves 31 and 32 whereby they are adapted to be energized in unison by the closing of the time switch 43. The time switch 44 has a connection 47 to the solenoid valve 33 with a branch 48 to the switch of the photo-electric cell 17. The time switch 43 also has a connection 49 to the time switch 44, and the latter has a connection 50 to the counter 45 which in turn has a connection 51 running to the time switch 43.

It should be noted that for the sake of simplicity in presentation and ease in understanding the connections 46 to 51 represent functional connections between the several electrical elements. In the actual wiring the switch of the time switch 44 and the switch of the photo-electric cell 17 are arranged in series with the solenoid valve 33 so that the latter is energized only when both these switches are closed and de-energized when either switch opens.

The solenoid valves 31 and 32 are connected in parallel so that they are energized and de-energized in unison by the time switch 43. Alternatively, a single solenoid valve could be substituted to control all three main valves 21, 23 and 25. However, it is sometimes more convenient to use several solenoid valves operating in unison because this facilitates testing and adjusting and also because solenoid valves are more readily available commercially with relatively small capacities than with the larger ones required for the control of several main valves, especially those having operators of substantial size.

Operation of the slurry pump shown in FIG. 1 is as follows. The quantity of slurry 30 shown in the pump chamber 10 is such that it has disappeared from the location in which it obstructs the light projected from the source 16 onto the cell 17. The cell 17 has therefore opened its switch, thereby de-energizing the solenoid valve 33 so that main valves 27 and 29 are closed. Main valves 21, 23 and 25 have been closed previously so that there is now no flow through the apparatus. Time switch 44 is still in its motivated position, but shortly will reach the end of its preset time interval whereupon it opens its switch and sends an impulse through the connection 50, thereby motivating the counter 45. The opening of time switch 44 produces no effect because the series connected switch of cell 17 has already opened, thereby de-energizing the solenoid valve 33.

On motivation the counter 45 sends an impulse through connection 51 to the time switch 43 which is thereby motivated to energize solenoid valves 31 and 32 through connection 46. This causes pressure fluid to be admitted from pipes 34 through the respective connections 40 and 41 to the diaphragm chambers of valves 21, 23 and 25, causing them to open. Now liquid under pressure enters through pipe 20 into the supply tank 18, fluidizing the slurry therein, and fluidized slurry flows through pipe 22 into the pump chamber 10 wherein it settles, the excess of fluidizing liquid flowing out through strainer 13 and pipe 24. As the level of slurry 30 in the pump chamber 10 rises it obstructs the light projected from the source 16 upon the cell 17 and the switch of cell 17 closes. However, this produces no immediate effect because the series connected time switch 44 has in the meantime opened. When the pump chamber 10 has been completely filled with slurry no more slurry can enter but fluidizing liquid continues to come in through pipe 22 and leaves the pump chamber 10 through strainer 13 and pipe 24.

Since the rate of flow of slurry through pipe 22 may vary somewhat from cycle to cycle the time switch 43 is set to allow a small extra margin of time to insure that the pump chamber 10 is completely filled with slurry during every operating cycle. When the time interval for which time switch 43 has been set has expired it de-energizes solenoid valves 31 and 32 and sends an impulse through connection 49, motivating time switch 44. The de-energization of the solenoid valves 31 and 32 vents the diaphragm chambers of main valves 21, 23 and 25 through pipes 34, and 40 and 41, respectively, and these three main valves close.

The motivation of time switch 44 causes its switch to energize solenoid valve 33 so that the main valves 27 and 29 open. Now liquid under pressure enters through pipe 26 (including a portion of pipe 24) and strainer 13 into the pump chamber 10 and pushes the slurry 30 through pipe 28 into the receiving tank 19. When the slurry 30 in the pump chamber 10 has dropped to the level shown in FIG. 1 it permits light from the source 16 to reach the photo-electric cell 17 which thereupon opens its switch, de-energizing solenoid valve 33 which in turn closes the main valves 27 and 29 thereby stopping the transfer of slurry from the pump chamber 10 to the receiving tank 19. This completes the cycle of operations. From time to time or more or less continuously and by any suitable means not shown in the drawing more slurry to be pumped is transferred into the supply tank 18 and the pumped slurry is removed from the receiving tank 19.

As the foregoing description makes clear, in each operating cycle the pump chamber 10 is alternatively completely filled with slurry and emptied of slurry to a level determined by the location of light source 16 and photo-electric cell 17. If these are raised or lowered adjacent to the windows 14 and 15, made oblong to permit such adjustability, the quantity of slurry pumped during each operating cycle may be decreased or increased, respectively.

Since the pump thus transfers a fixed quantity of slurry during each operating cycle, predetermined by the positioning of the light source 16 and the photo-electric cell 17, the counter 45, by registering the number of operating cycles, constitutes a meter for the quantity of slurry pumped. If the counter 45 sends an impulse to time switch 43 every time it receives and counts an impulse from time switch 44 operation of the pump is continuous. However, the counter 45 is preferably of the type which may be optionally set or adjusted so that after receiving and counting a pre-selected number of impulses received from time switch 44 it sends no impulse to time switch 43, thereby stopping operation of the pump. This performance may then be repeated by re-setting or activating the counter 45 which can be done manually or automatically by the use of an additional timer or other control device.

The liquid supplied to pipes 20 and 26 for fluidizing and transferring the slurry may be water or some other suitable liquid. When the pump is used in ion exchange liquid treatment spent regenerating liquid may be used for this purpose to good advantage. When the liquid is clear, like water, it is best to provide the light source 16 with means to project a concentrated beam of light towards the cell 17. When the liquid is milky, however, like spent brine, it is better to employ as light source 16 a flood light which, aided by the opalescence of the spent brine, tends to light up all or most of the interior of the pump chamber 10. In either case the absence or presence of slurry in the region between the windows 14 and 15 determines whether or not light reaches the photo-electric cell 17 and whether the switch of cell 17 is open or closed, respectively.

In the interest of good functioning of the pump it is important that the main valves opened in one step of the cycle are fully closed before the other main valves open in the next step. At the end of the pump chamber emptying step this is inherent in the construction shown in FIG. 1 because the photo-electric cell 17 de-energizes

solenoid valve 33, resulting in the closing of main valves 27 and 29 before the time switch 44 reaches the end of its time interval and sends an impulse bring about the opening of main valves 21, 23 and 25. It may, however, be necessary to employ special means such as a time delay relay to delay either sending an impulse to time switch 44 or the energization of solenoid valve 33 at the end of the pump chamber filling step in order to provide the time interval necessary for main valves 21, 23 and 25 to close before main valves 27 and 29 begin to open.

FIG. 2 shows a modification of a portion of the slurry pump illustrated in FIG. 1. Here the pump chamber 10 has no windows (14 and 15 in FIG. 1) and in lieu thereof the pipe 28 is provided with a transparent section 55 adjacent to the pump chamber 10. The light source 16 and the photo-electric cell 17 are located on opposite sides of the transparent section 55. Thus, the photo-electric cell 17 is responsive to the appearance and disappearance of slurry in pipe section 55. Because of the relatively small cross-section of the latter no significant adjustment of the quantity of slurry pumped during each operating cycle can be attained by raising or lowering the light source 16 and photo-electric cell 17, as in FIG. 1. To provide such adjustability without changing the size of pump chamber 10 the pipe 22 communicates with an extension 56 terminating at a level L. In this modification pipe 24 including valve 25 is connected with the bottom 11 instead of top 12 and provided with a strainer 57 to prevent escape of slurry when excess liquid is discharged through pipe 24 during the pump chamber filling step. As shown, pipe 24 is branched to pipe 28 between the latter's connection with the bottom 11 and valve 29, pipe 26 remaining connected with stainer 13.

With this arrangement the inflow of slurry into the pump chamber 10 stop automatically when the slurry 30 has reached the level L, because the slurry settled in the lower part of the pump chamber 10 upon reaching this level acts as a valve and thus stops the admission of more slurry although some fluidizing liquid continues to enter the pump chamber 10 through pipe 22 and flow out through strainer 57 and pipe 24 until the solenoid valve 32 is de-energized by the time switch 43, closing main valves 23 and 25. This feature is described in more detail and specifically claimed in my U.S. Patent 3,208,934 dated September 28, 1965. The quantity of slurry pumped during each operating cycle may be adjusted by lengthening or shortening the extension 56, thereby lowering or raising the level L.

Aside from the basic difference that in FIG. 1 the pump chamber 10 is completely filled with slurry during the filling step and emptied to a predetermined level during the emptying step whereas in FIG. 2 the pump chamber 10 is filled to a predetermined level L in the filling step and completely emptied in the emptying step the two modifications operate in a similar manner, and the above description of the operation of the slurry pump shown in FIG. 1 applies to FIG. 2 as well.

Each of the modifications shown in FIGS. 1 and 2 has certain advantages. In FIG. 1 the adjustment of the quantity of slurry pumped in each operating cycle is simpler and more convenient. In FIG. 2, the transparent pipe section 55 is simpler and less costly than the windows 14 and 15 of FIG. 1, and the higher velocity of flow through the section 55 tends to keep it scoured and clean.

In the embodiment of my invention shown in FIG. 3 many elements are the same and function in the same manner as in FIG. 1, and such elements have, therefore, been assigned the same reference numerals. The principal difference is that in lieu of a photo-electric cell causing the closing of the main valves a ball float 60 is employed to automatically seat on the bottom outlet of the pump chamber 10 when substantially all slurry has been withdrawn. The density of the ball float 60 must be so selected that it floats in the slurry but sinks in the liquid forming a constituent part of the slurry. For instance, when the slurry consists of cation exchange resin and water it has a density of about 1.24 in the settled condition, and a density of approximately 1.16 to 1.19 when fluidized by the addition of 25 to 50 percent more water. For such slurry a ball float with a density of about 1.05 is used which is somewhat higher than that of water and substantially lower than that of settled as well as fluidized slurry. A good way of making the ball float 60 is to use a ball of polyethylene (which has a density somewhat lower than 1.0) provided with a cavity closed by a flush plug into which cavity lead shot may be inserted to adjust the overall density of the ball to the required value.

If in any particular use the densities of both the slurry and the liquid are subject to variations the ball float 60 should have an overall density which is greater than that of the liquid of the highest specific gravity encountered, but lower than the lowest density which the slurry may have.

This apparatus includes an additional pipe 61 leading to a supply of liquid under pressure and having a main valve 62 and a strainer 63. Pipe 61 is branched to pipe 28 between the pump chamber 10 and valve 29 so that it thus communicates with the bottom portion of the pump chamber 10. There is also an additional solenoid pilot valve 64 similar to the others, with a normally closed port and connection NC supplied with fluid under pressure through a pipe 34, a normally open port and connection NO adapted to discharge through a pipe 35 to a point of disposal, and a common port and connection C. The common port C of solenoid valve 31 has a pipe connection 65 with the diaphragm chambers of main valves 21 and 23, that of solenoid valve 32 has a connection 66 with main valve 25, that of solenoid valve 33 has a connection 67 with main valves 27 and 29, and that of solenoid valve 64 has a connection 68 with main valve 62.

The timing means of FIG. 3 include a time switch 44 and counter 45 like those in FIG. 1, and two additional time switches 70 and 71 each of which has two separate switches which are opened and closed in unison but which otherwise operate in the manner described above for time switches 43 and 44.

The functional interconnections between the various electrical devices are as follows. Connection 72 leads from one switch of time switch 70 to the solenoid valve 31, and connection 73 from the other switch to the solenoid valve 32. A connection 74 leads from the switch of time switch 44 to the solenoid valve 33. Connection 75 leads from one switch of the time switch 71 to the solenoid valve 32, and a connection 76 from the other switch to the solenoid valve 64. In the actual wiring the connections 73 and 75 place the switches of time switches 70 and 71 from which they lead in parallel circuits with each other so that the solenoid valve 32 is energized when either of these switches is closed, and de-energized when both these switches are open. There are, furthermore, the following motivating connections: 77 from time switch 70 to time switch 44, 78 from time switch 44 to time switch 71, 79 from time switch 71 to counter 45, and 80 from counter 45 back to the time switch 70.

The apparatus is shown in FIG. 3 in the condition prevailing at the end of the pump chamber emptying step. The switch of time switch 44 is closed, solenoid valve 33 is energized, and main valves 27 and 29 are open. The ball float 60, riding down on the top level of the slurry had approached the end of pipe 28 so closely that it was sucked down, thus stopping further outflow of slurry although some slurry, as shown at 30, still remains in the pump chamber 10. Since there is some slurry trapped between the ball float 60 and the bottom 11 liquid entering through pipe 26 continues to flow through the interstices in this trapped slurry and through pipe 28 into the receiving tank 19 for a short interval until the time switch 44 reaches the end of its preset time period, opens its

switch thereby de-energizing solenoid valve 33 so that main valves 27 and 29 close, and sends a motivating impulse through connection 78 to time switch 71.

The motivation of time switch 71 energizes solenoid valves 32 and 64, and main valves 25 and 62 open. Liquid under pressure now enters through pipe 61 and a portion of pipe 28, not only pushing the ball float 60 up from the end of pipe 28 but also levelling off the small amount of slurry remaining in the pump chamber 10. The liquid flows out through strainer 13 and pipe 24. This step requires only a fraction of a minute, and the time switch 71 is therefore adjusted to maintain its switches closed after motivation for such short time. When the end of that time has been reached the time switch 71 opens, de-energizing solenoid valves 32 and 64 so that valves 25 and 62 close. Flow through the pump chamber 10 stops and the ball float 60 rides on the levelled off slurry. Simultaneously with the de-energization of solenoid valves 32 and 64 the time switch 71 sends a motivating impulse through connection 79 to the counter 45 which registers the operating cycle and passes a motivation impulse through connection 80 to time switch 70.

The motivation of time switch 70 causes its switches to energize solenoid valves 31 and 32 so that the main valves 21, 23 and 25 open. Fluidizing liquid enters into the supply tank 18 through pipe 20, and slurry flows through pipe 22 into the pump chamber 10. The fluidizing liquid passes out through strainer 13 and pipe 24. The ball float 60 rides up on the slurry as it settles in the pump chamber 10, but in order to insure this and prevent the possibility that the ball float might become buried in the slurry which would result in premature closing of the outlet by the ball float 60 in the following pump chamber emptying step it is necessary to introduce the slurry into the pump chamber 10 at a rate of flow not less than about 0.85 gallon per minute per square foot of horizontal cross sectional area of the pump chamber 10. The time switch 70 has been set to maintain solenoid valves 31 and 32 energized for a short time longer than normally required to fill the pump chamber 10. Thus when the pump chamber 10 has been completely filled with slurry with the ball float riding against the top 12 fluidizing liquid only continues to flow through pipes 20, 22 and 24 for a brief period whereupon the switches of time switch 70 open, solenoid valves 31 and 32 are de-energized, main valves 21, 23 and 25 close, and a motivating impulse passes through connection 77 to time switch 44.

The motivation of time switch 44 energizes solenoid valve 33, main valves 27 and 29 open, and liquid entering pipe 26 pushes the slurry from the measuring chamber 10 through pipe 28 into the receiving tank 19 with the ball float 60 riding down on top of the bed of slurry. When nearly all slurry has thus been removed from the measuring chamber 10 the ball float 60 is sucked against the end of pipe 28, thus stopping the flow of slurry. This restores the condition initially described and completes the operating cycle which here includes three steps, the ball lifting step taking place after the emptying step and before the filling step. This cycle is repeated indefinitely unless the counter 45 stops operation of the pump after a predetermined number of cycles, as described above.

Without the ball float 60 there would be a flow of liquid into the receiving tank 10 at an objectionably high rate of flow after the slurry has been removed from the pump chamber 10 and before valves 27 and 29 are closed. With the ball float 60 the resistance in the innerstices of the slurry trapped between the ball float 60 and the bottom 11 restricts this flow to a relatively low and not objectionable rate.

In this embodiment substantially the entire content of the pump chamber 10 is transferred during each operating cycle, the relatively small quantity of slurry remaining on the bottom 11 at the end of the emptying step being practically constant from cycle to cycle. There is no adjustment of the quantity of slurry pumped per cycle.

FIG. 4 shows a modification of the slurry pump of FIG. 3 with adjustability of the quantity by the provision of an extension 90 for the pipe 22, similar to extension 56 of FIG. 2, which may be shortened or lengthened to raise or lower the level L to which the pump chamber 10 is filled with slurry during the filling step.

In this modification there is an additional pipe 91 leading to a point of disposal and connected with pipe 61 so that it communicates through portions of pipes 61 and 28 with pump chamber 10. Pipe 91 has a main valve 92 the diaphragm chamber of which is connected by a pipe 93 with pipe 65 so that valve 92 is controlled by solenoid valve 31 to operate in unison with valves 21 and 23. The functional connections 73, 77 and 79 of FIG. 3 are omitted and there are provided a motivating connection 94 from time switch 70 to time switch 71 and a motivating connection 95 from time switch 44 to counter 45.

In FIG. 4 the apparatus is shown in condition ready to commence the emptying step, the slurry 30 extending up to the level L even with the lower end of pipe 90, and the ball float 60 riding on the top stratum of this bed of slurry.

The emptying step is initiated by a motivating impulse from time switch 71 through connection 78 to time switch 44 which causes the slurry to be transferred from the pump chamber 10 to the receiving tank 19 in the manner previously described in connection with FIG. 3. On expiration of the alotted time, with the ball float 60 in the position shown in FIG. 3, the time switch 44 sends a motivating signal through connection 95 to counter 45 which in turn motivates the time switch 70 through connection 80.

Time switch 70 now energizes solenoid valve 31 and the main valves 21, 23 and 92 open. Fluidizing liquid flows through pipe 20 into supply tank 18, whence slurry passes through pipe 22 and extension 90 into the pump chamber 10 wherein it settles, burying the ball float 60. The fluidizing liquid flows out through the interstices in the slurry trapped between the ball float 60 and the bottom 11, portions of pipes 28 and 61, and pipe 91, and this flow continues even after the slurry 30 has reached the level L and stops further admission of slurry through extension 90, until at the end of its alotted time the time switch 70 opens its switch, thereby de-energizing solenoid valve 31 so that main valves 21, 23 and 92 close, and sends a motivating impulse through connection 94 to time switch 71.

On such motivation time switch 71 energizes solenoid valves 32 and 64 and main valves 25 and 62 open. Liquid entering through pipe 61 pushes the ball float up from the end of pipe 28 and by its upward flow through pump chamber 10 loosens the bed of slurry 30 so that the ball float due to its buoyancy rises through the slurry until it floats in the top stratum of slurry, as illustrated in FIG. 4. The liquid flows out through strainer 13 and pipe 24. After the brief interval of time required for this operation the time switch 71 opens its switch, de-energizing solenoid valves 32 and 64 so that main valves 25 and 62 close, and sends a motivating impulse through connection 78 to time switch 44. This completes the cycle of operations and initiates another one. This cycle, as in FIG. 3 consists of three steps but here the ball lifting step is interposed after the filling step and before the emptying step.

The periods of time for which the several time switches are set depend, of course, on the quantity of slurry pumped per cycle, the size of the main valves and piping connected with the pump chamber and other factors. These time periods may be of the order of 1 to 2 minutes for the filling and emptying steps and a fraction of a minute for the ball lifting step (if a ball float is used). These time periods include for each step the time required for the opening and closing of the valves and the time needed to complete the particular operation plus an extra margin for safety.

In lieu of the hydraulic or pneumatic type (as shown) motorized main valves may be used. In that event the valve control means will include electric motors and limit switches, as well as means for reversal of the direction of rotation to effect alternating opening and closing of the main valves.

Separate time switches have been shown for the several operating steps because time switches of a construction suitable for such use are readily available commercially. However, a single timing device could be substituted which combines the functions of the several time switches in a single mechanism.

When the pump is used in ion exchange treatment the slurry will generally consist of bead resin or other granular ion exchange material and water or spent regenerant, i.e. brine or acid in case of cation exchange and solution of alkali in case of anion exchange. The pump may also be employed to pump a slurry of activated carbon used for purification of water, sugar solutions, etc. Other uses include the transfer of slurries of granular solid catalysts or reactants to or from reaction vessels or processes.

It should be noted that the ball float will only function satisfactorily if there exists an appreciable difference between the density of the slurry and that of the liquid used. Referring in this connection to the above mentioned uses for my novel slurry pump, there is not a sufficiently large density difference when the slurry consists of activated carbon and water. Therefore, for pumping such slurry the arrangements of FIGS. 3 and 4 are not recommended, and the arrangement of FIG. 1 or 2 should be used.

While I have shown and described what I consider the best forms of my invention modifications including those specifically referred to herein and others may be made without departing from the spirit of my invention, and reference is therefore made to the appended claims for a definition of its scope.

What I claim is:

1. A pump for slurry consisting of a granular solid and a liquid, comprising a pump chamber, a slurry supply tank, a slurry receiving tank, a first pipe interconnecting said supply tank and a supply of liquid, a second pipe interconnecting said supply tank and said pump chamber, a third pipe interconnecting said pump chamber and a point of disposal, a fourth pipe interconnecting said pump chamber and a supply of liquid, a fifth pipe interconnecting said receiving tank and said pump chamber, valve means in each of said pipes, first control means connected and adapted upon actuation to open the valve means in said first, second and third pipes, second control means connected and adapted upon actuation to open the valve means in said fourth and fifth pipes, timing means connected with said control means and adapted to alternately actuate said first and second control means, said timing means comprising two separate timers each having switch means adapted upon motivation of the timer to close for a predetermined interval of time, each of said control means being connected with and adapted to be actuated by one of said switch means, and interconnections between said timers whereby each of said timers is adapted to motivate the other of said timers.

2. In the pump of claim 1, a pump cycle counter interposed in one of the interconnections between said timers.

3. A pump for slurry consisting of a granular solid and a liquid, comprising a pump chamber, a slurry supply tank, a slurry receiving tank, a first pipe interconnecting said supply tank and a supply of liquid, a second pipe interconnecting said supply tank and said pump chamber, a third pipe interconnecting said pump chamber and a point of disposal, a fourth pipe interconnecting said pump chamber and a supply of liquid, a fifth pipe interconnecting said receiving tank and said pump chamber, valve means in each of said pipes, first control means connected and adapted upon actuation to open the valve means in said first, second and third pipes, second control means connected and adapted upon actuation to open the valve means in said fourth and fifth pipes, timing means connected with said control means and adapted to alternately actuate said first and second control means, said timing means comprising two switches, said control means comprising three-way solenoid valves each having a coil connected with and adapted to be energized by one of said switches, a common port, a normally open port establishing communication between said common port and a point of disposal and adapted to be closed upon energization of said coil, and a normally closed port adapted to be opened upon energization of said coil and thereby establish communication between the common port and a supply of fluid under pressure, pressure responsive operators for said valve means, and a connection from each of said pressure responsive operators to the common port of one of said solenoid valves.

4. A pump for slurry consisting of a granular solid and a liquid, comprising a pump chamber, a slurry supply tank, a slurry receiving tank, a first pipe interconnecting said supply tank and a supply of liquid, a second pipe interconnecting said supply tank and said pump chamber, a third pipe interconnecting said pump chamber and a point of disposal, a fourth pipe interconnecting said pump chamber and a supply of liquid, a fifth pipe interconnecting said receiving tank and said pump chamber, valve means in each of said pipes, first control means connected and adapted upon actuation to open the valve means in said first, second and third pipes, second control means connected and adapted upon actuation to open the valve means in said fourth and fifth pipes, timing means connected with said control means and adapted to alternately actuate said first and second control means, a switch operated by said timing means, a light source and a photo-electric cell adjacent to said pump chamber and arranged so that light is projected from said light source onto said photo-electric cell and that slurry passing through said pump chamber obstructs said light, and a second switch operated by said photo-electric cell in response to the presence of slurry in said light, both said switches being wired in series with said second control means.

5. In the pump of claim 4, transparent windows on opposite sides of said pump chamber, said light source being located adjacent to one of said windows and said photo-electric cell being located adjacent to another of said windows on the opposite side of said pump chamber.

6. The pump of claim 4, said fifth pipe having a transparent portion, said light source and said photo-electric cell being located on opposite sides of said transparent portion.

7. A pump for slurry consisting of a granular solid and a liquid, comprising a pump chamber, a slurry supply tank, a slurry receiving tank, a first pipe interconnecting said supply tank and a supply of liquid, a second pipe interconnecting said supply tank and said pump chamber, a third pipe interconnecting said pump chamber and a point of disposal, a fourth pipe interconnecting said pump chamber and a supply of liquid, a fifth pipe interconnecting said receiving tank and said pump chamber, valve means in each of said pipes, first control means connected and adapted upon actuation to open the valve means in said first, second and third pipes, second control means connected and adapted upon actuation to open the valve means in said fourth and fifth pipes, timing means connected with said control means and adapted to alternately actuate said first and second control means, said pump chamber having a sloping bottom, said fifth pipe terminating in the lowest part of said sloping bottom, and a ball float in said pump chamber, said ball float having a density lower than the density of said slurry but higher than the density of the liquid forming a constituent part of said slurry.

8. In the pump of claim 7, a sixth pipe interconnecting a supply of liquid under pressure and said fifth pipe at a location between said pump chamber and the said valve means in said fifth pipe, and valve means in said sixth pipe.

9. In the pump of claim 8, third control means connected and adapted upon actuation to open the valve means in said sixth pipe, said timing means being connected with said third control means and adapted to actuate said third control means for a predetermined period of time.

References Cited by the Examiner

UNITED STATES PATENTS

2,147,422	2/1939	Bendz	103—25
2,572,082	10/1951	Welsh	210—33
2,614,584	10/1952	Goepfrich	251—139
2,812,773	11/1957	McGee	103—25
2,815,322	12/1957	Higgins	210—33
3,123,015	3/1964	Linklater	103—240
3,208,934	9/1965	Kingsbury	210—33

MARK NEWMAN, *Primary Examiner.*
W. J. KRAUSS, *Assistant Examiner.*