US009105972B2

(12) **United States Patent**
Webb

(10) **Patent No.: US 9,105,972 B2**
(45) **Date of Patent: Aug. 11, 2015**

(54) **DIRECTIONAL PLANAR SPIRAL ANTENNA**

(75) Inventor: **Spencer Webb**, Windham, NH (US)

(73) Assignee: **ANTENNASYS, INC.**, Windham, NH (US)

(*) Notice: Subject to any disclaimer, the term of this patent is extended or adjusted under 35 U.S.C. 154(b) by 531 days.

(21) Appl. No.: **13/479,238**

(22) Filed: **May 23, 2012**

(65) **Prior Publication Data**

US 2012/0229363 A1 Sep. 13, 2012

Related U.S. Application Data

(63) Continuation-in-part of application No. 12/544,838, filed on Aug. 20, 2009, now Pat. No. 8,193,997.

(51) **Int. Cl.**

H01Q 1/36	(2006.01)
H01Q 1/38	(2006.01)
H01Q 1/00	(2006.01)
H01Q 9/27	(2006.01)
H01Q 13/10	(2006.01)

(Continued)

(52) **U.S. Cl.**

CPC ***H01Q 1/38*** (2013.01); ***H01Q 1/007*** (2013.01); ***H01Q 9/27*** (2013.01); ***H01Q 13/106*** (2013.01); ***H01Q 13/18*** (2013.01); ***H01Q 17/001*** (2013.01)

(58) **Field of Classification Search**

CPC H01Q 13/106; H01Q 13/18; H01Q 1/38; H01Q 9/27

USPC 343/895, 767

See application file for complete search history.

(56) **References Cited**

U.S. PATENT DOCUMENTS

3,192,531 A * 6/1965 Cox et al. 343/895
3,618,114 A 11/1971 Dietrich

(Continued)

FOREIGN PATENT DOCUMENTS

GB 2313486 11/1997
JP 2005244965 9/2005

(Continued)

OTHER PUBLICATIONS

Ozdemir T. et al. "Analysis of thing multioctave cavity-backed slot spiral antennas", IEE Proceedings: Microwaves, Antennas and Propagation, IEE, vol. 146, No. 6, Dec. 8, 1999, pp. 447-454.

(Continued)

Primary Examiner — Tho G Phan

(74) *Attorney, Agent, or Firm* — ARC IP Law, PC; Joseph J. Mayo

(57) **ABSTRACT**

Directional wide band antenna that may be utilized to enhance cell phone coverage within a building, and/or for signals intelligence collection (SIGINT). Includes a spiral antenna with feed-point configured to transfer energy to/from the antenna. Includes an energy absorbent backing and an energy absorbent siding coupled with the spiral antenna. Includes a cavity behind the log-spiral slot antenna and in front of the energy absorbent backing. Includes a cable connector coupled to a tapered microstrip line coupled to the feed-point wherein the tapered microstrip line is configured to transform the input impedance to the antenna impedance. Housed in a container configured to hold the above listed components. Energy absorbent siding, cavity and energy absorbent backing greatly reduces back lobes. Another embodiment has log-spiral shaped slots at an outer portion of the log-spiral slot antenna overlap with the energy absorbent siding and wherein the feed-point overlaps the cavity.

19 Claims, 65 Drawing Sheets

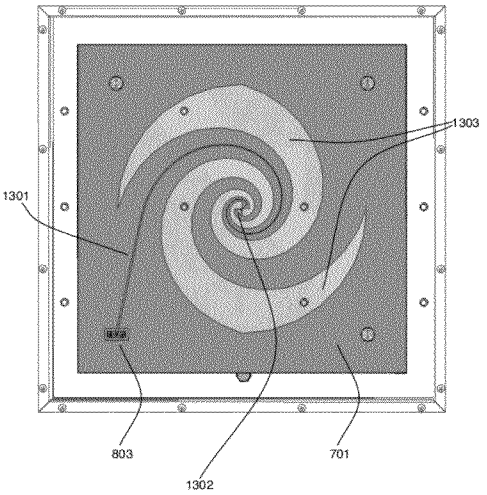

(51) **Int. Cl.**
H01Q 13/18 (2006.01)
H01Q 17/00 (2006.01)

(56) **References Cited**

U.S. PATENT DOCUMENTS

4,095,230	A		6/1978	Salmond et al.	
4,114,164	A		9/1978	Greiser	
4,319,248	A		3/1982	Flam	
4,743,918	A	*	5/1988	Rannou et al.	343/895
5,053,786	A		10/1991	Silverman	
5,162,806	A	*	11/1992	Monser	343/753
5,313,216	A		5/1994	Wang et al.	
6,191,756	B1		2/2001	Newham	
6,201,513	B1	*	3/2001	Ow et al.	343/895
6,300,919	B1	*	10/2001	Mehen et al.	343/895
6,407,721	B1		6/2002	Mehen et al.	
6,853,351	B1		2/2005	Mohuchy	
2002/0122009	A1		9/2002	Winebrand et al.	
2005/0179597	A1		8/2005	Pintos et al.	
2009/0201216	A1		8/2009	Gerneth	
2011/0043414	A1		2/2011	Webb	

FOREIGN PATENT DOCUMENTS

JP	2005244965	B2	9/2005
WO	97/25755		7/1997

OTHER PUBLICATIONS

Volakis J. et al. "A broadband cavity-backed slot spiral antenna" IEEE Antennas and Propagation Magazine, IEEE Service Center, vol. 43, No. 6, Dec. 1, 2001, pp. 15-26.
Extended EP Search Report issued on Jan. 22, 2013 for EP Appl. No. 10810694.9, 9 pages.
RFspin s.r.o. "SCSA-27 Electrical specification", retrieved from http://www.rfspin.cz/anteny/scsa-27.php on Sep. 14, 2009, 5 pages.
Piksa, "Log-Spiral antenna from 2 to 40 GHz with impedance matching", 4 pages.
Johnson, "Antenna Engineering Handbook", Third edition, DuHamel et al. Frequency-Independent Antennas, 20 pages.
VDAR-1 Antenna, "Single 5dBic "Hybrid-Patch" Antenna with mounting option", 1 page.
Lo et al. "Antenna Handbook" vol. II, "Antenna Theory", "Frequency-Independent Antennas", 4.Log-Spiral Antennas, 1993, 11 pages.
International Search Report and Written Opinion for corresponding PCT application, dated Dec. 21, 2010, 8 pages.
Notification Concerning Transmittal of International Preliminary Report on Patentability dated Mar. 1, 2012, 6 page.
International Search Report and Written Opinion for PCT/US2013/042321, dated Sep. 5, 2013, 7 pages.
IPRP, PCT/US2013/042321, dated Dec. 4, 2014, 6 pages.

* cited by examiner

FIGURE 1

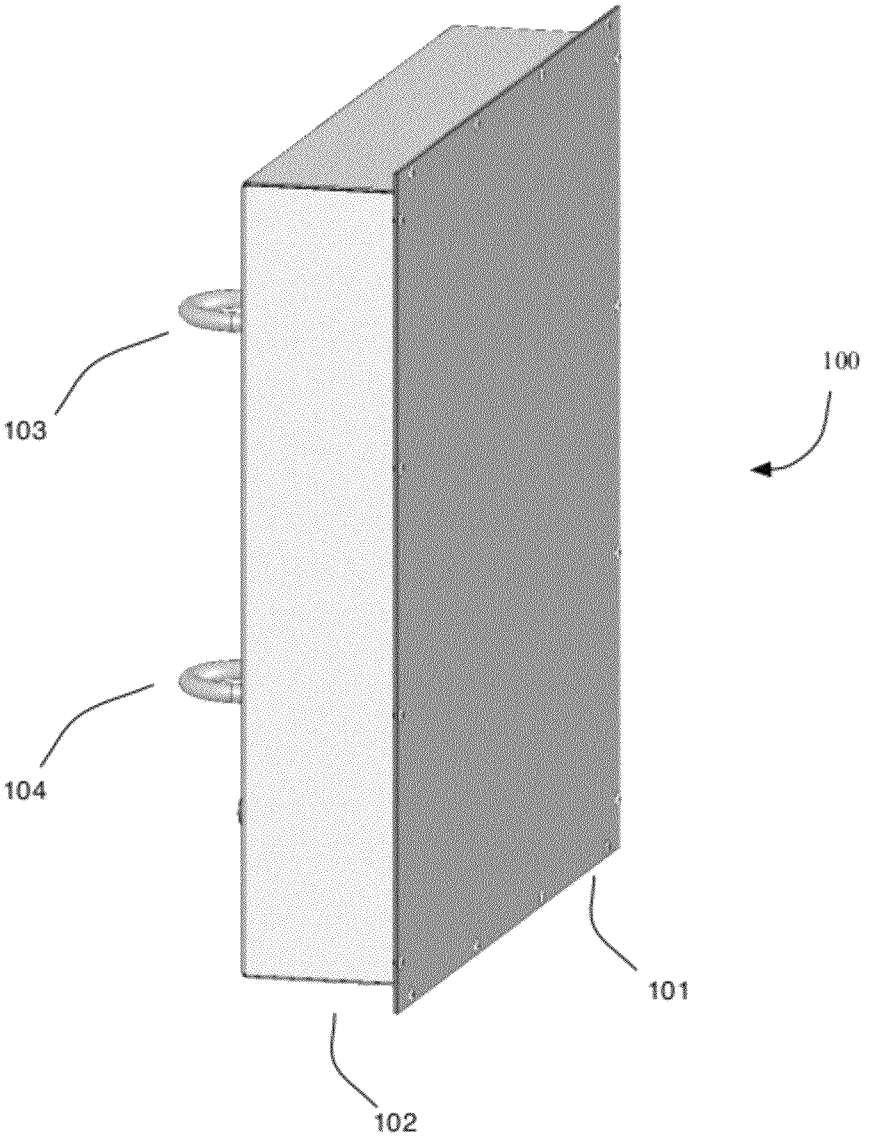

FIGURE 2

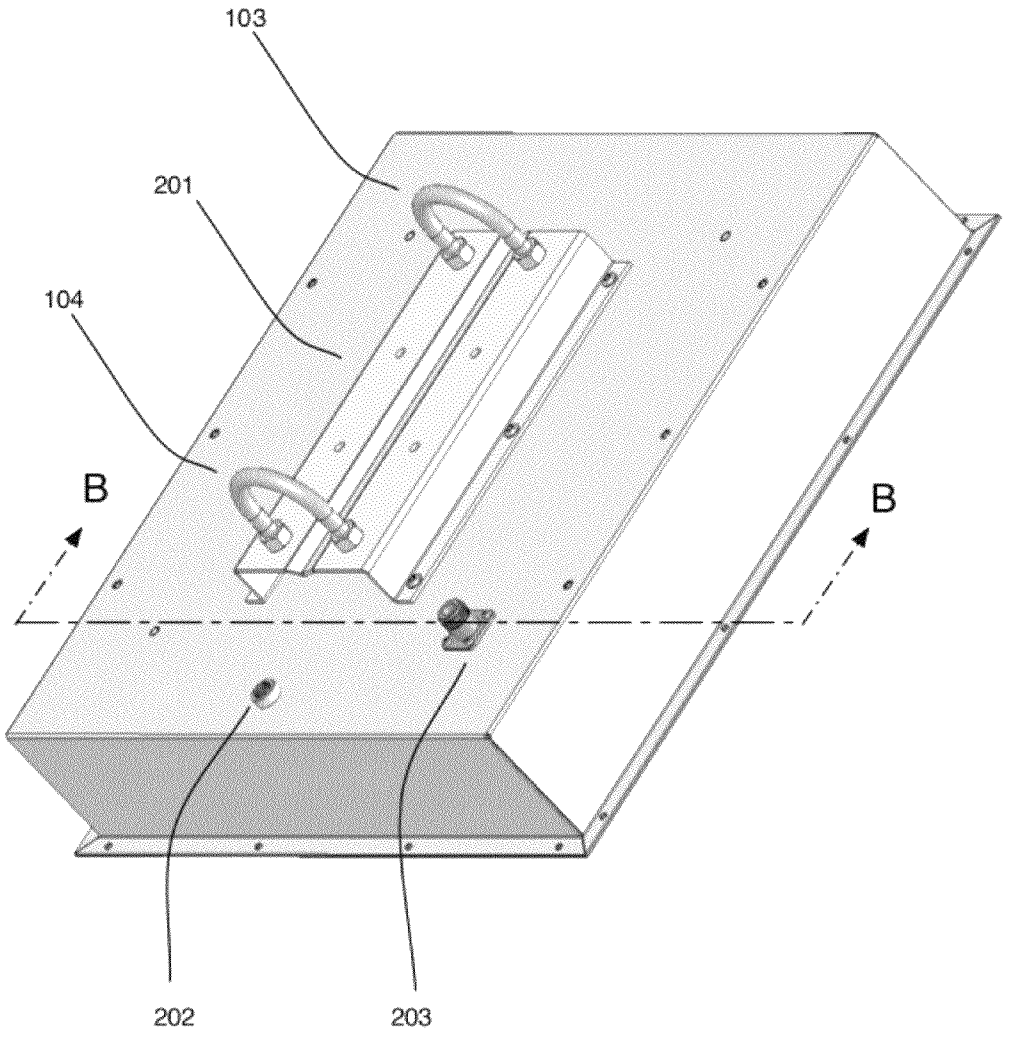

FIGURE 3

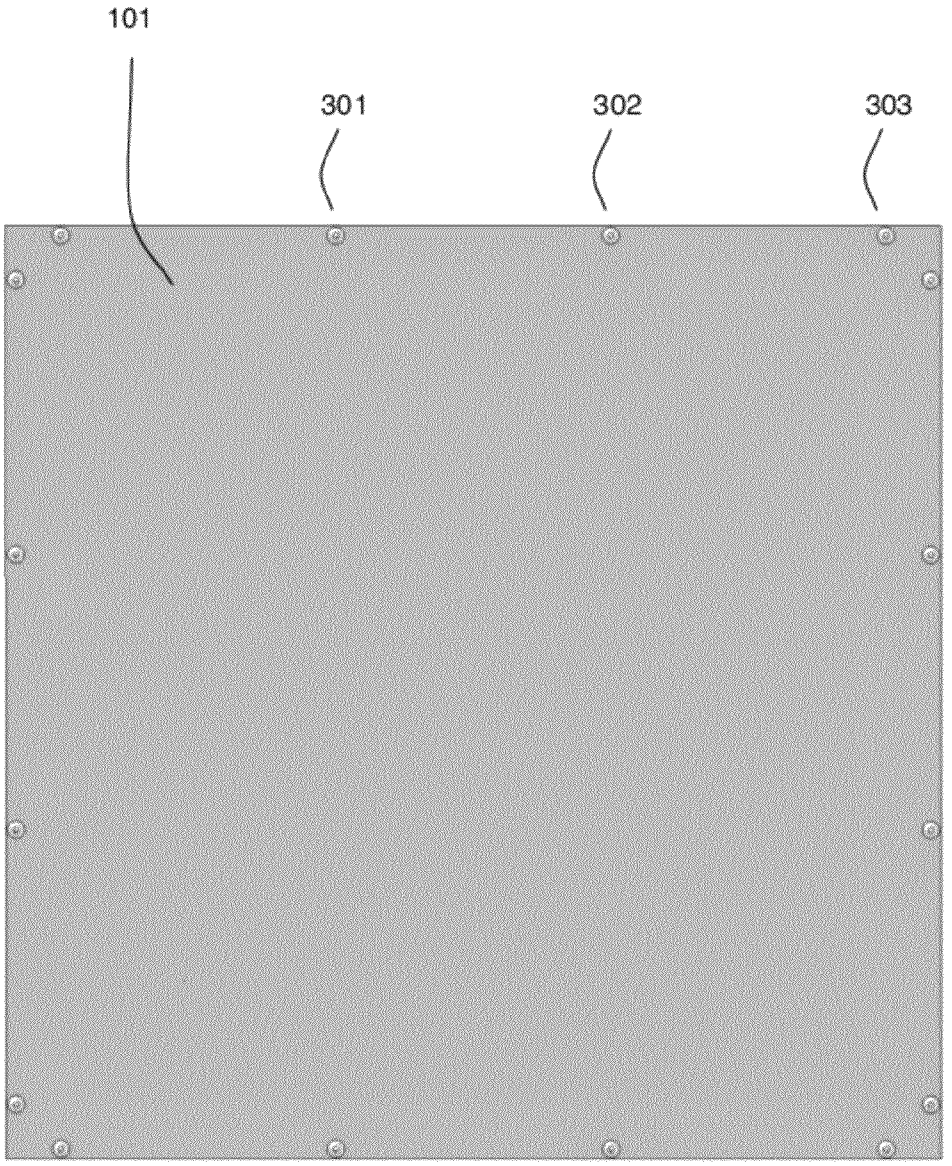

FIGURE 4

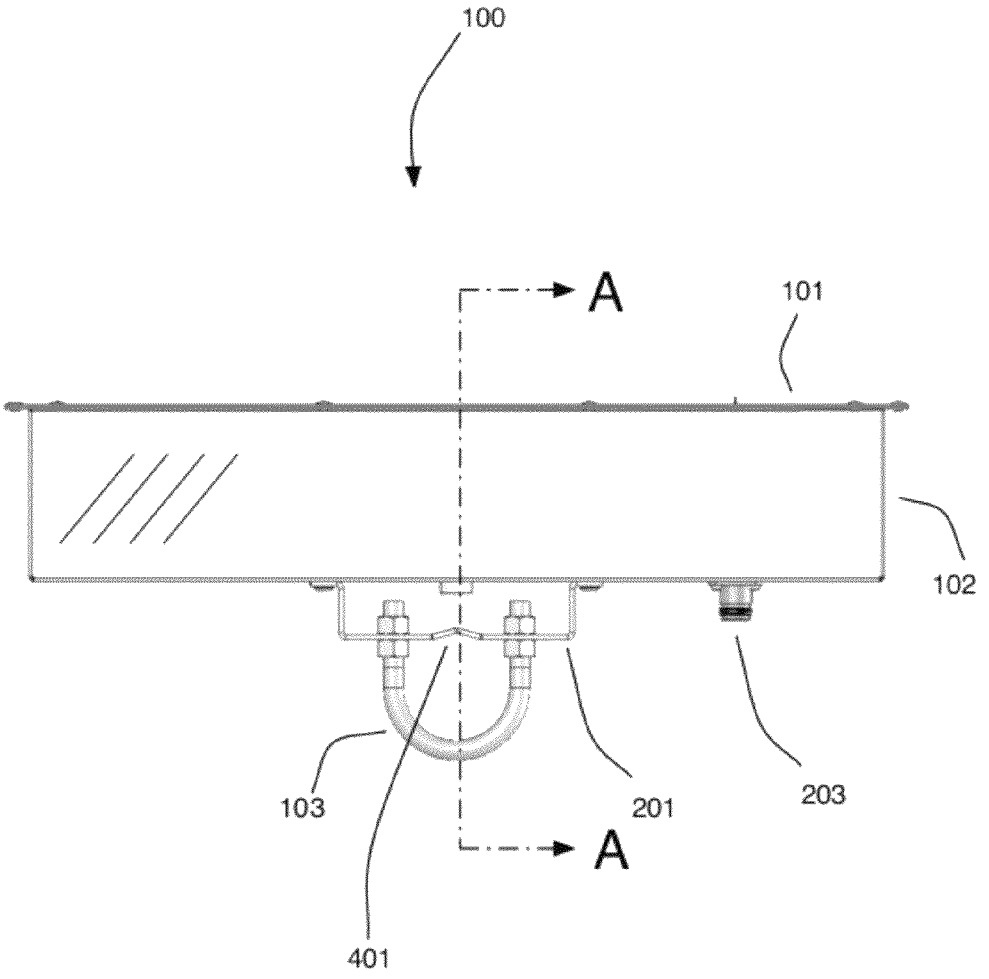

FIGURE 5

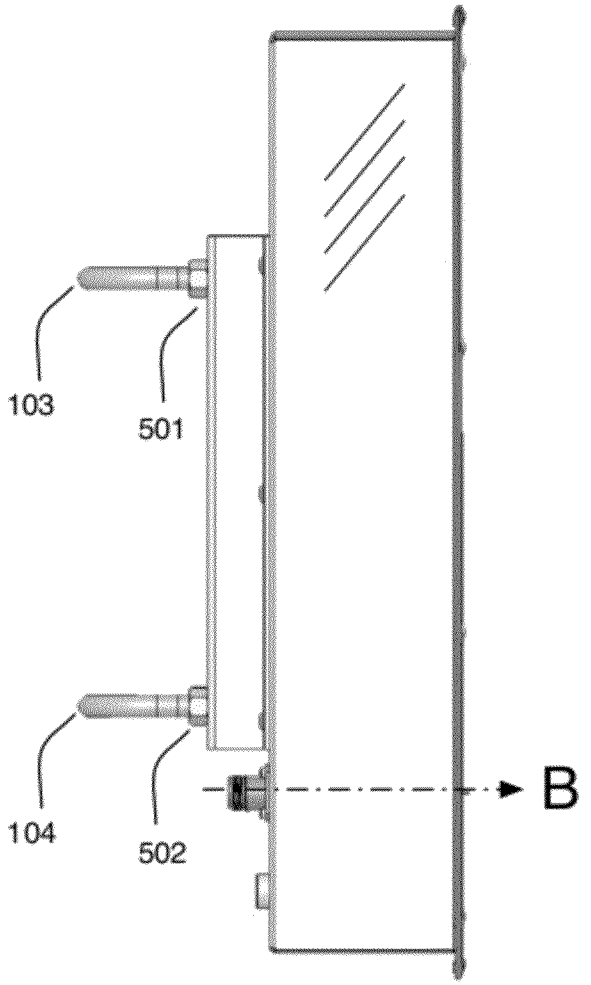

FIGURE 6

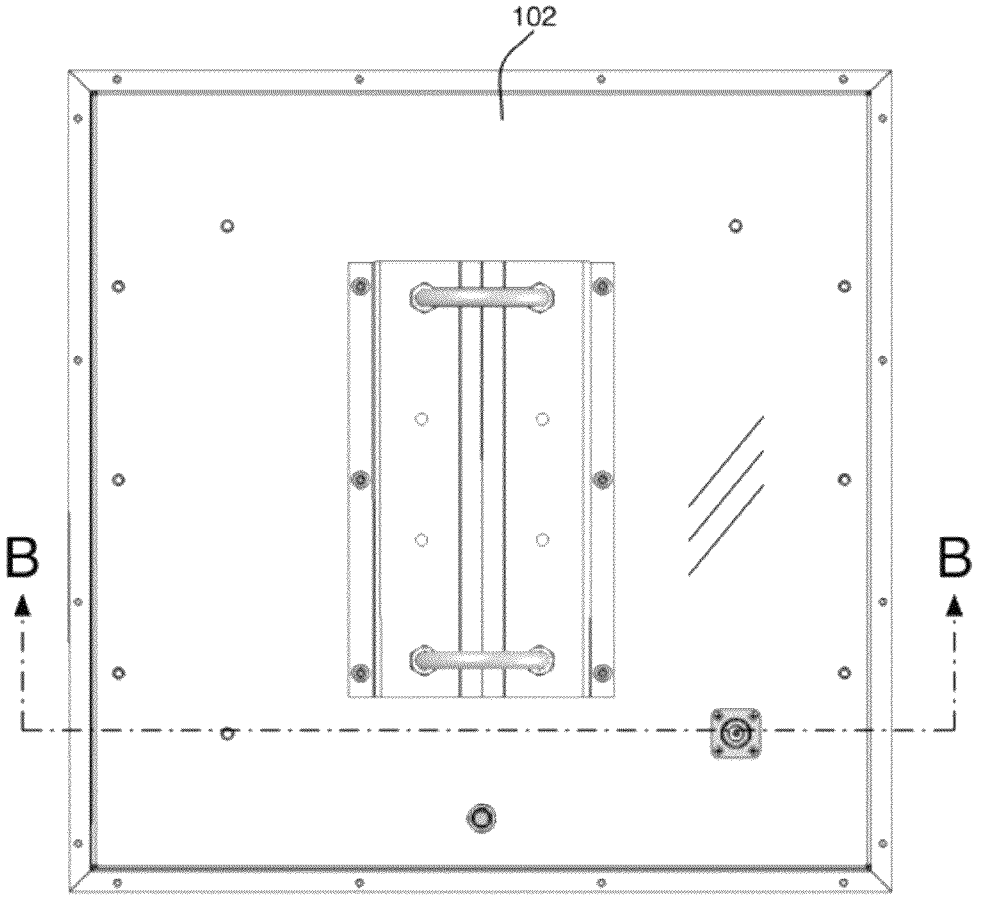

FIGURE 7

A

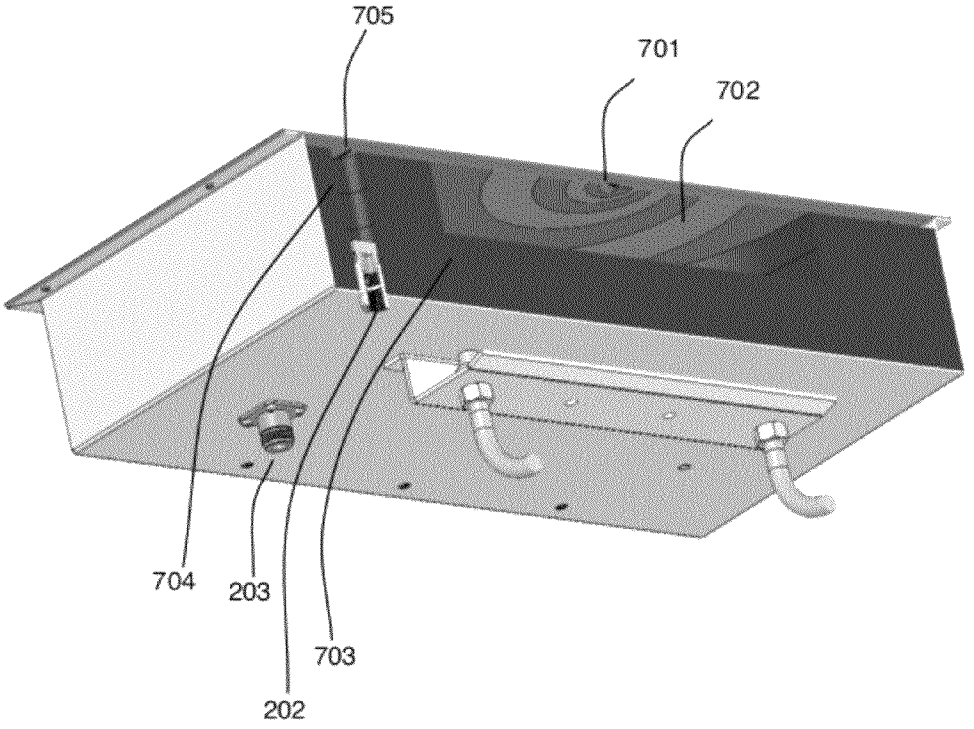

FIGURE 8

B

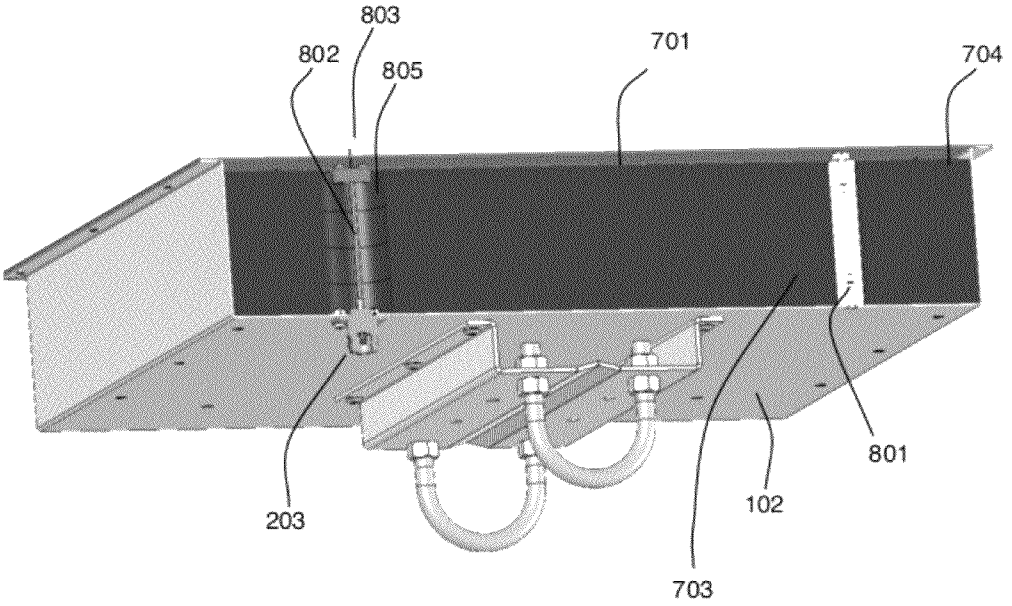

FIGURE 9

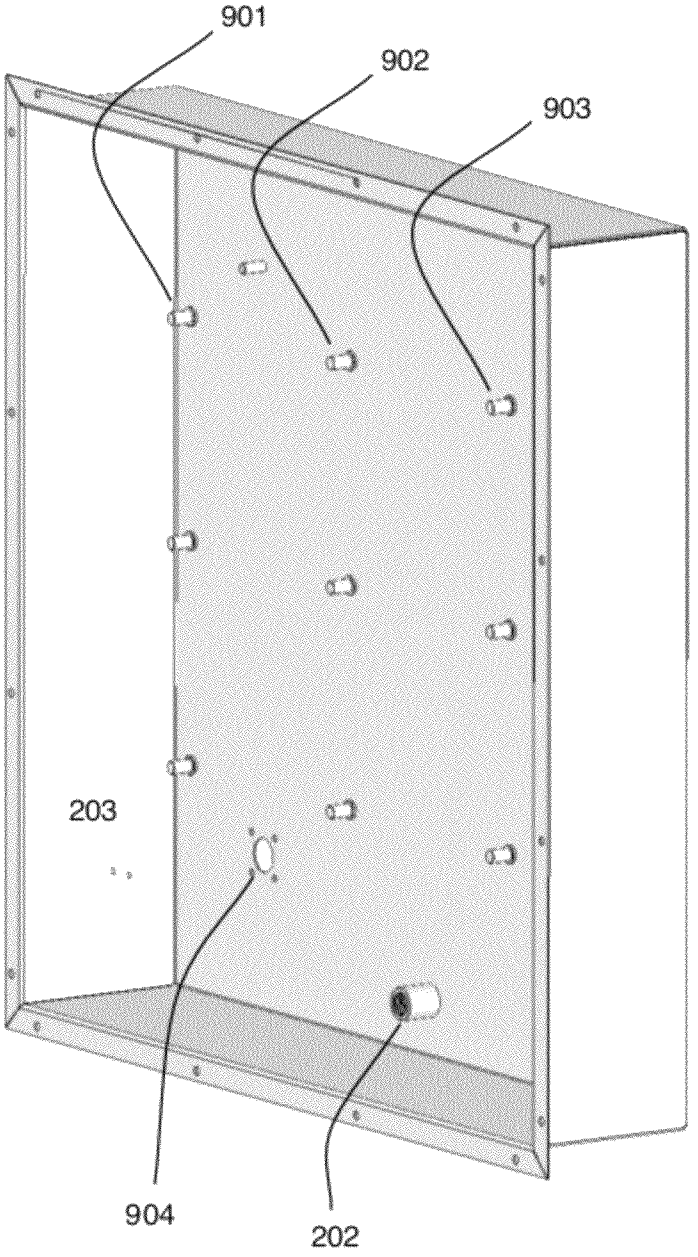

FIGURE 10

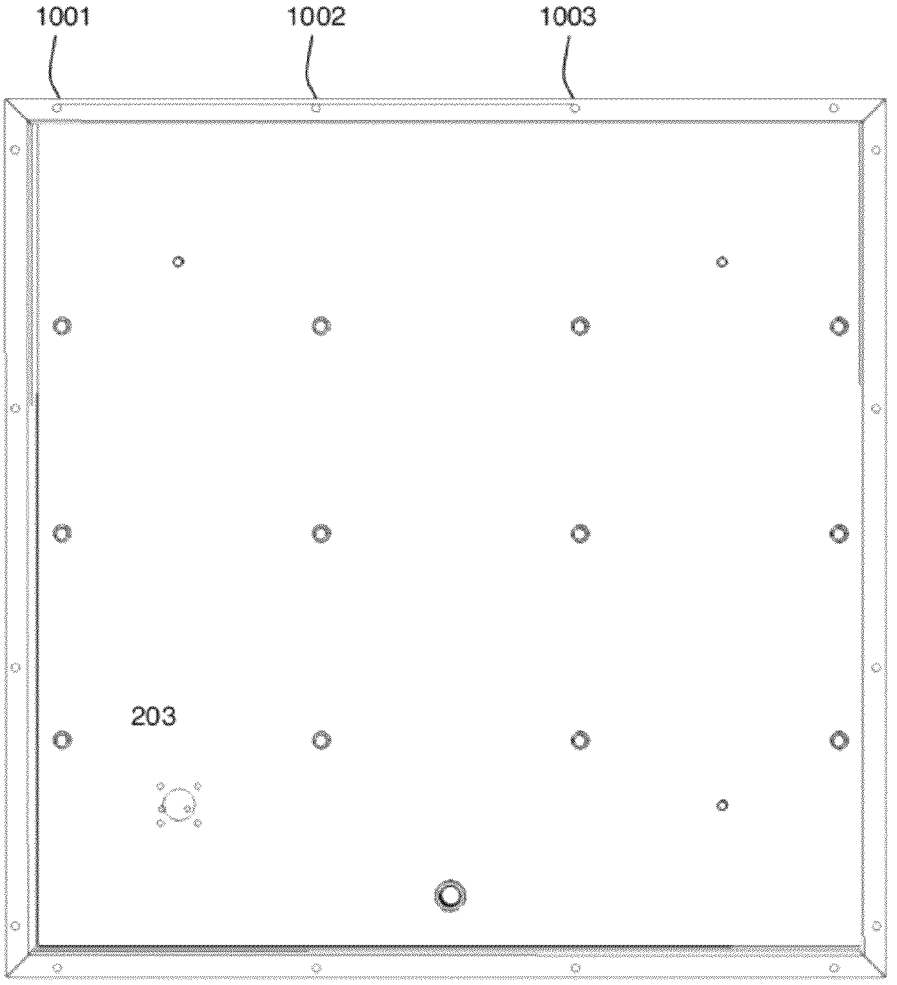

FIGURE 11

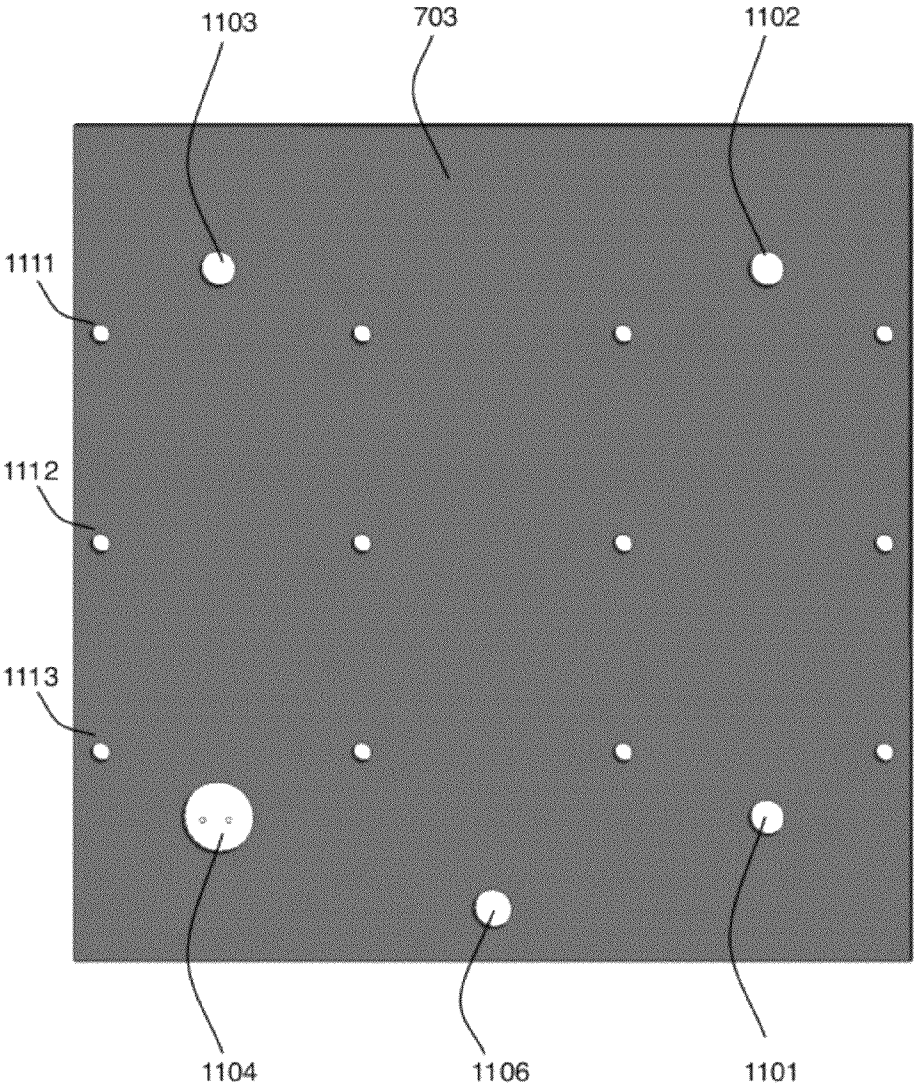

FIGURE 12

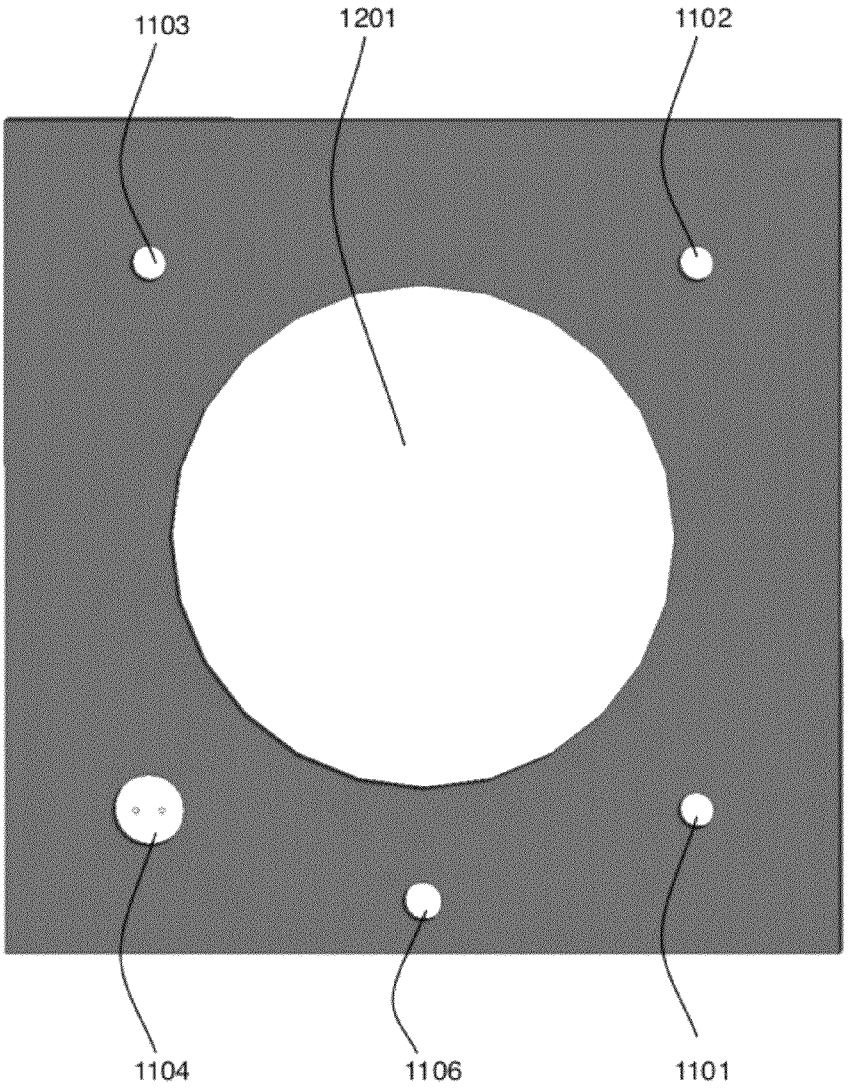

FIGURE 13

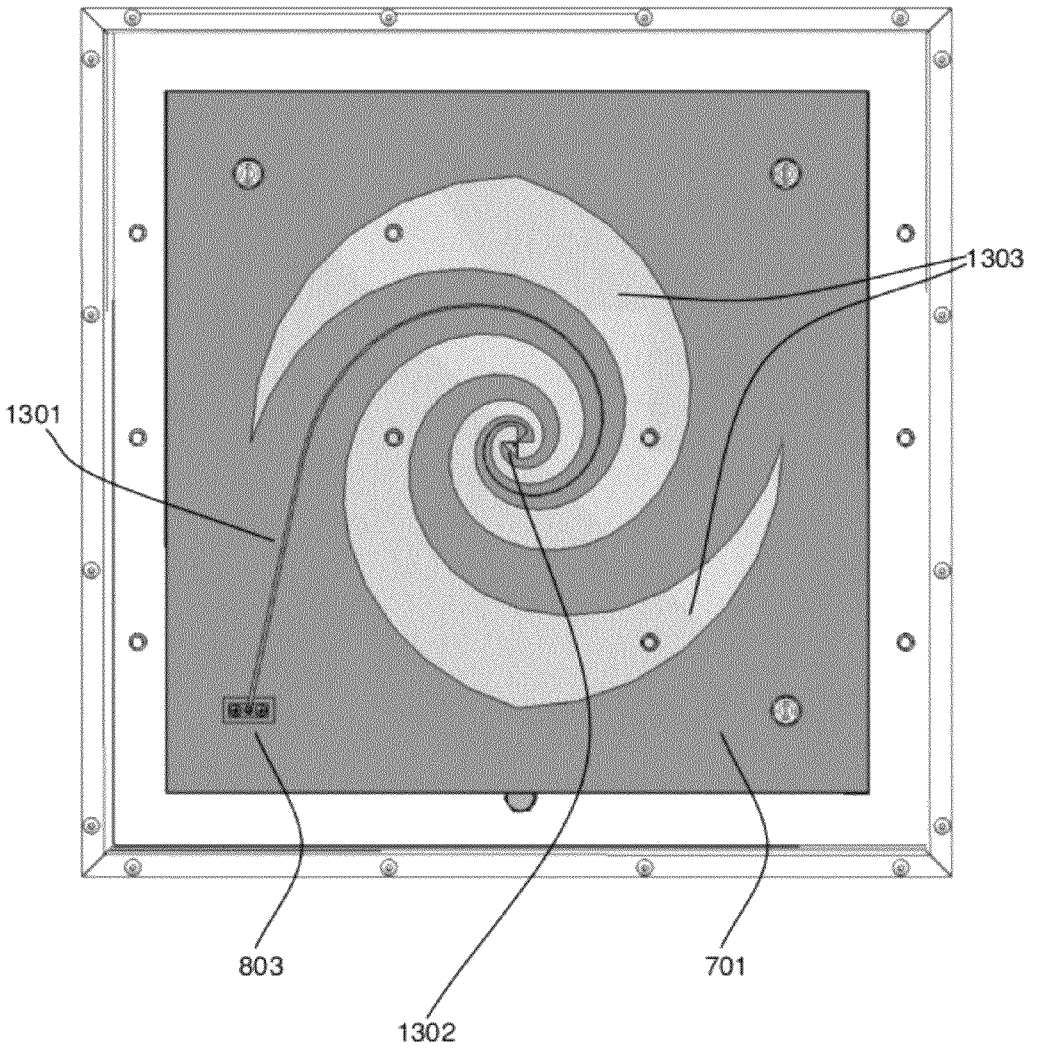

FIGURE 14

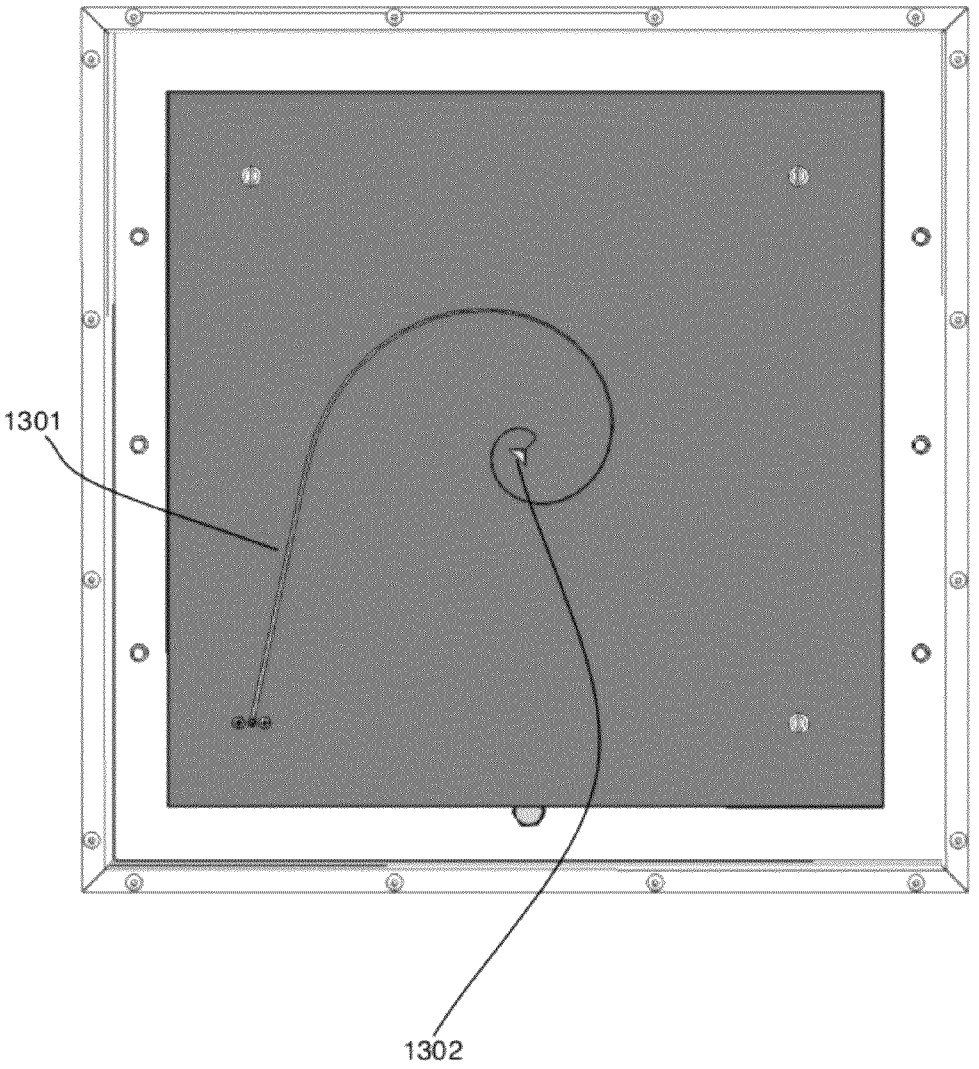

FIGURE 15

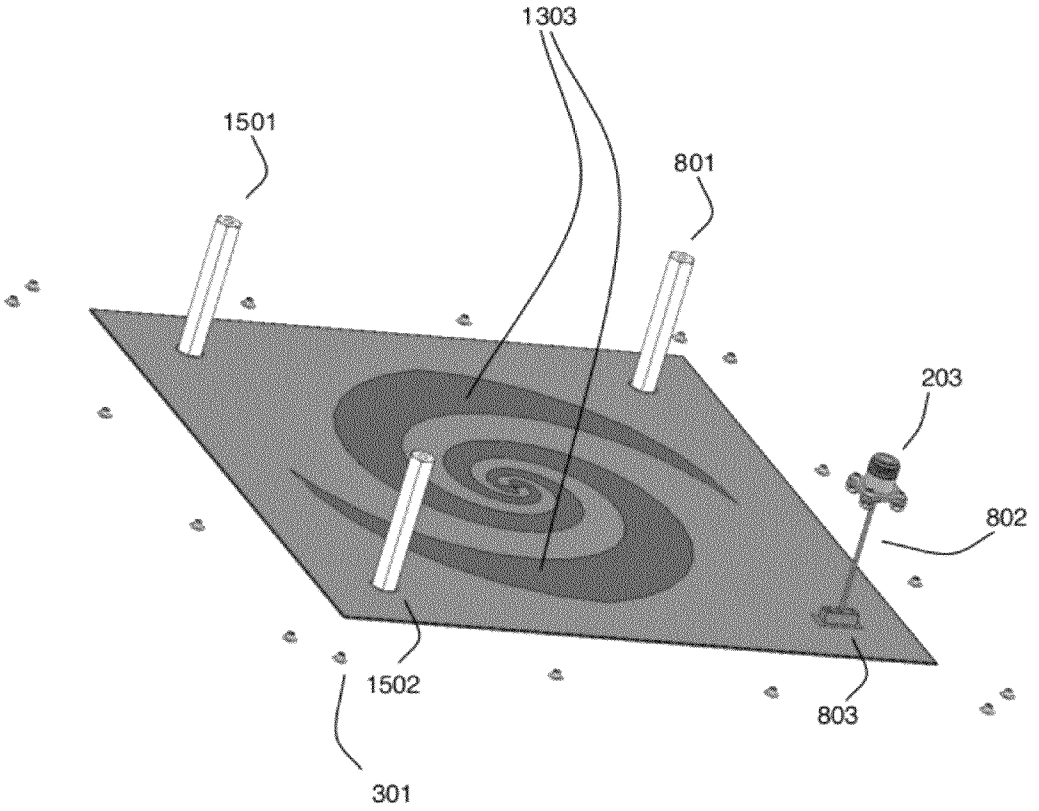

FIGURE 16

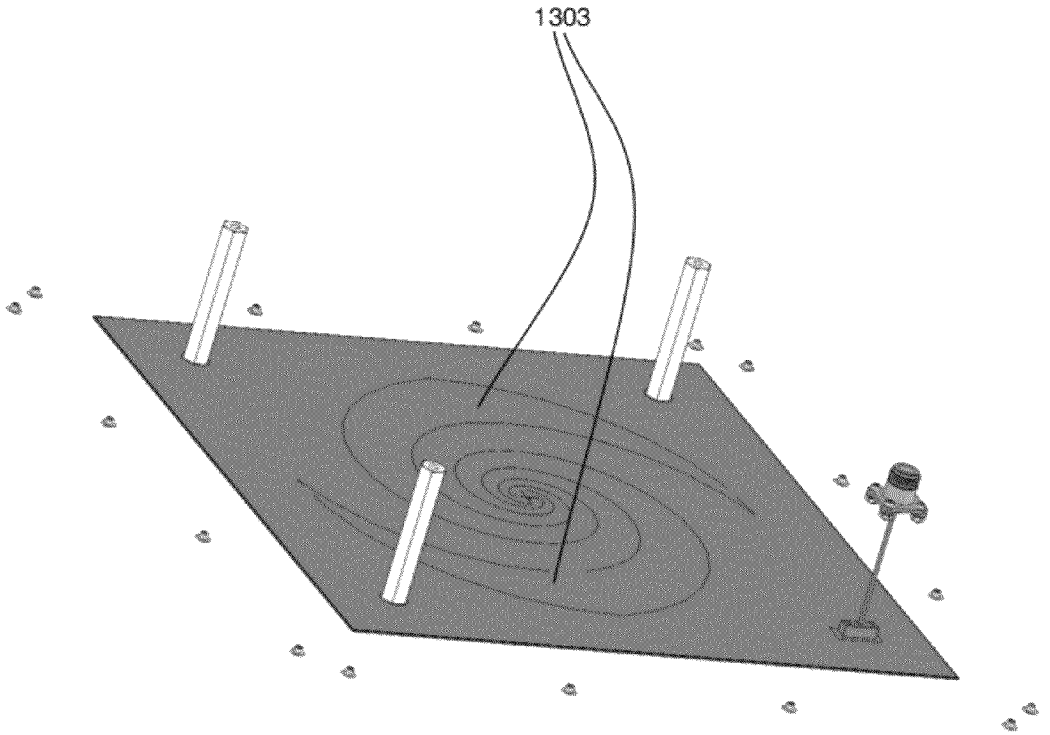

FIGURE 17

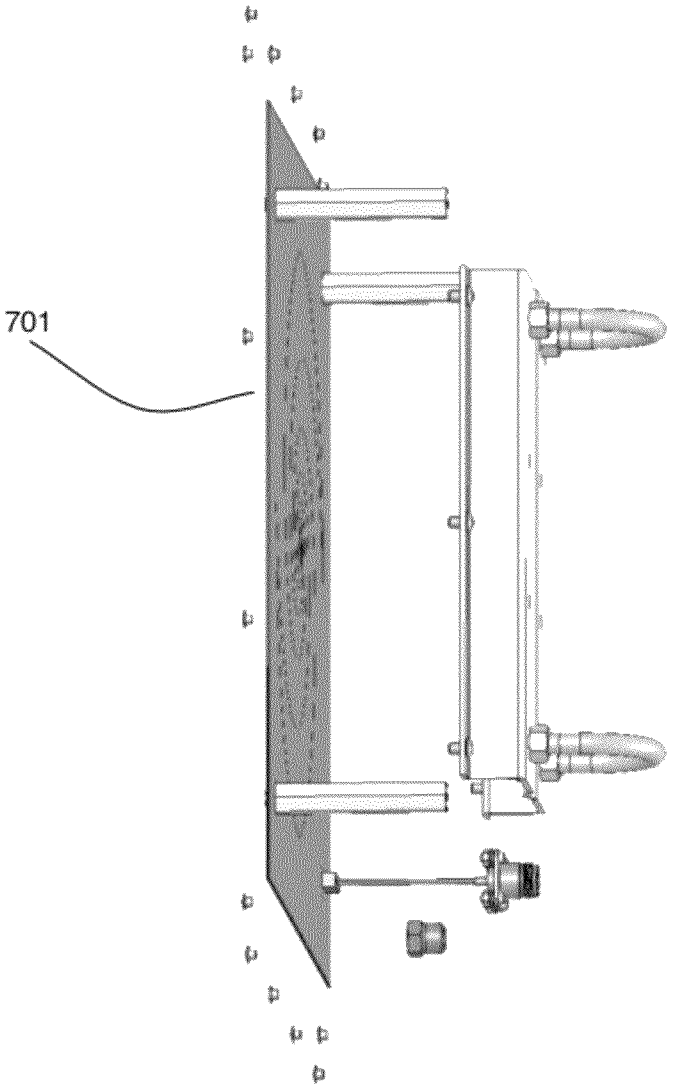

FIGURE 18

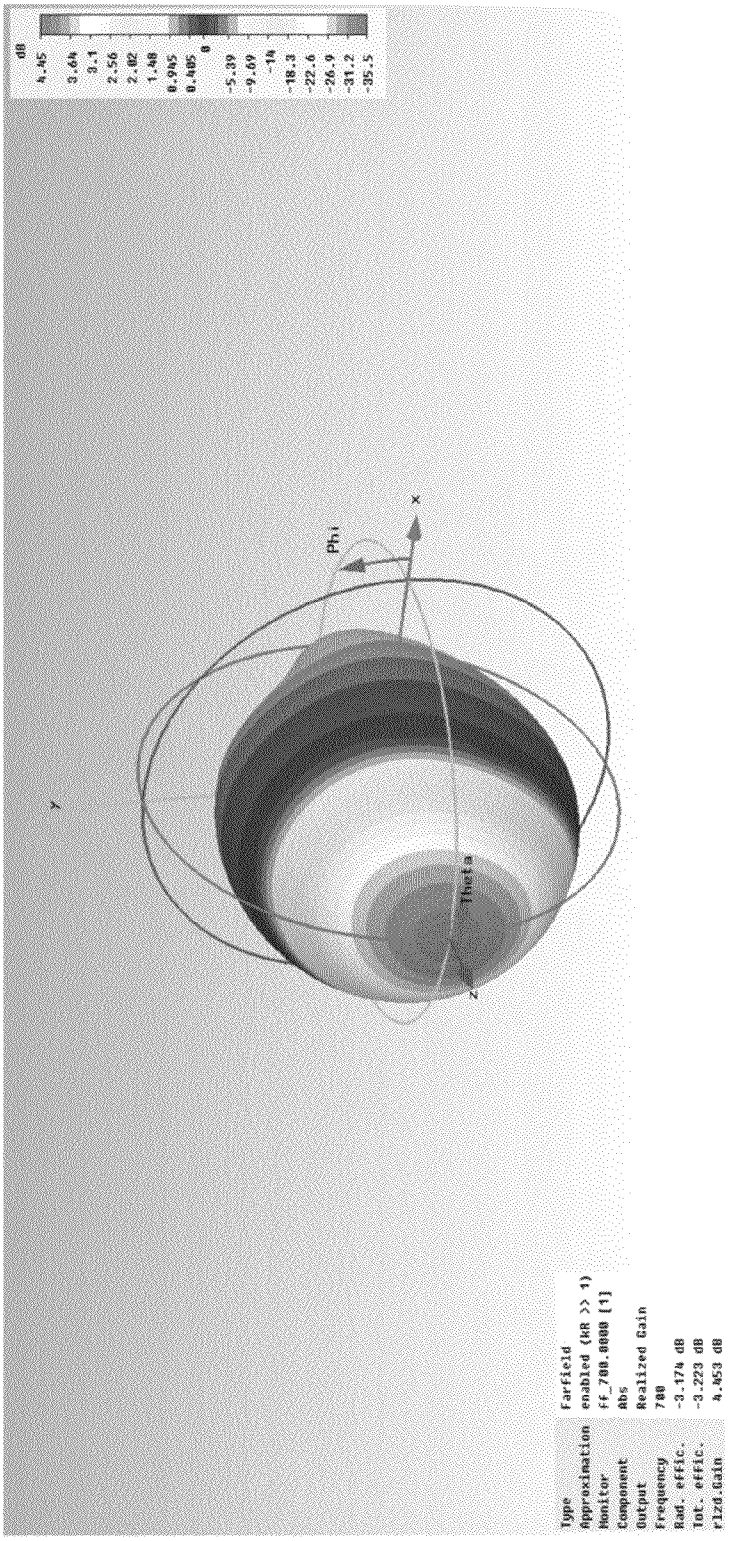
Type Farfield
Approximation enabled (kR >> 1)
Monitor ff_700.0000 [1]
Component Abs
Output Realized Gain
Frequency 700
Rad. effic. -3.174 dB
Tot. effic. -3.223 dB
rlzd.Gain 4.453 dB
dB
4.45
3.64
3.1
2.56
2.02
1.48
0.945
0.405
0
-5.39
-9.69
-14
-18.3
-22.6
-26.9
-31.2
-35.5
Phi
Theta
x
y
z

FIGURE 19

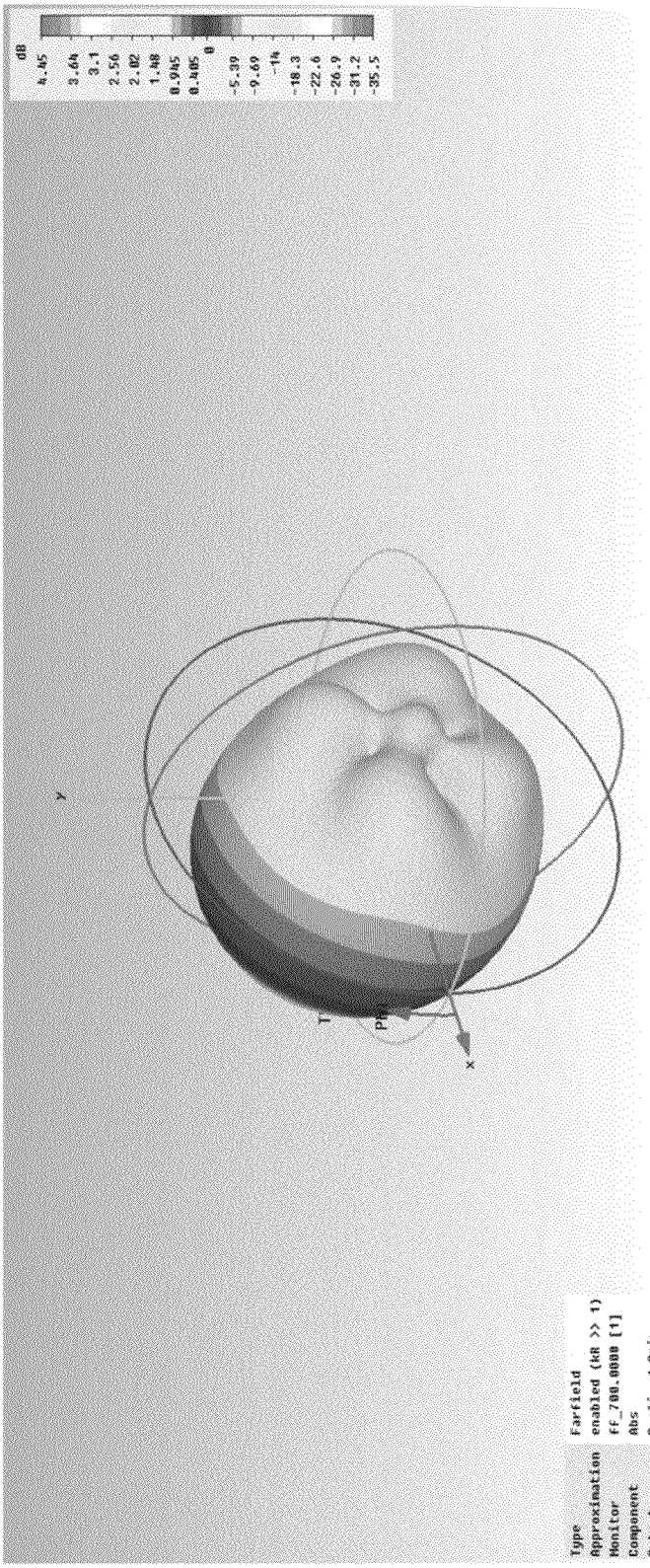
dB
4.45
3.64
3.1
2.56
2.02
1.48
0.945
0.485
0
-5.39
-9.69
-14
-18.3
-22.6
-26.9
-31.2
-35.5
Y
X
Type Farfield
Approximation enabled (kR >> 1)
Monitor ff_700.0000 [1]
Component Abs
Output Realized Gain
Frequency 700
Rad. effic. -3.174 dB
Tot. effic. -3.229 dB
rlzd.Gain 4.453 dB

FIGURE 20

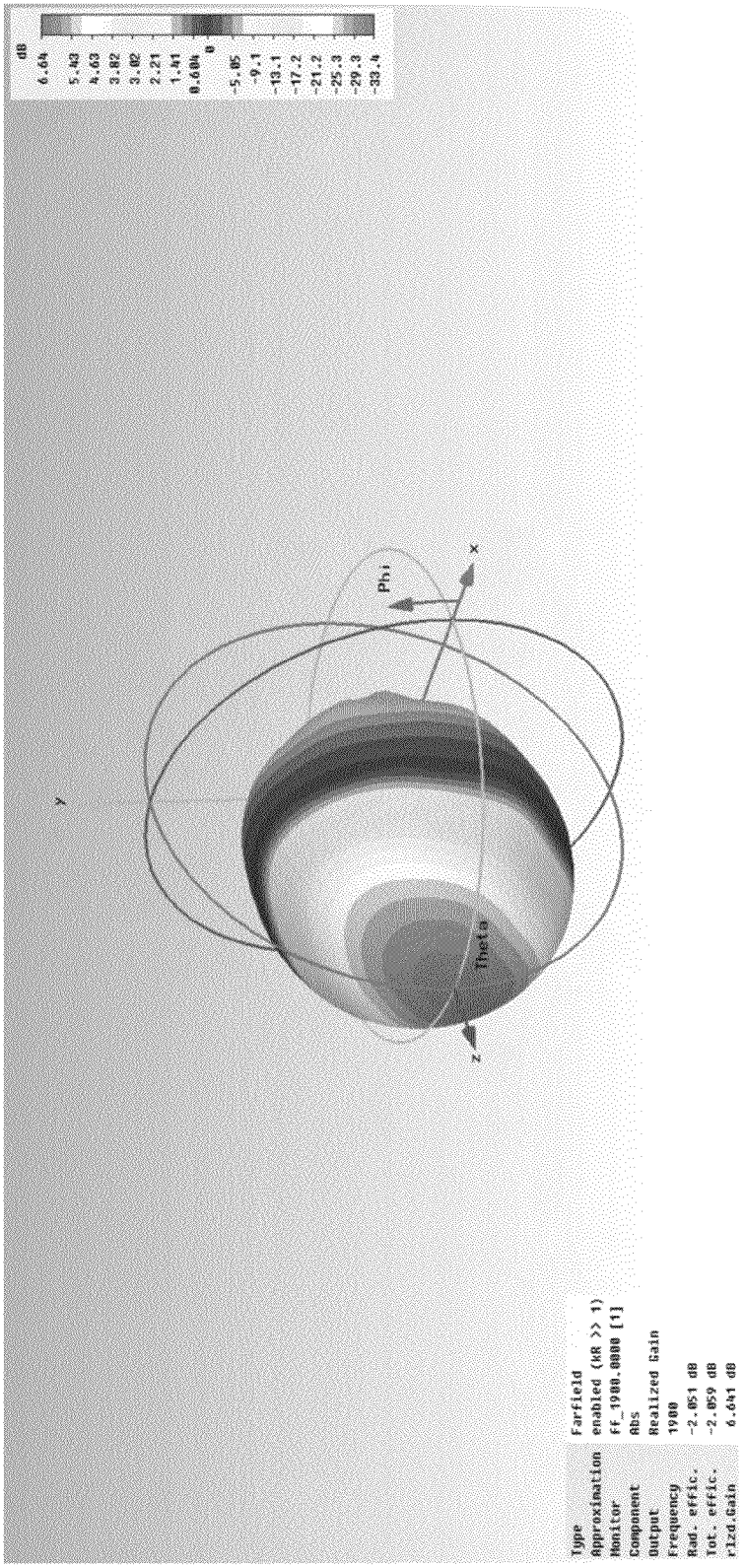
dB
6.64
5.43
4.63
3.82
3.02
2.21
1.41
0.604
0
-5.05
-9.1
-13.1
-17.2
-21.2
-25.3
-29.3
-33.4
Y
Phi
X
Theta
Z
Type Farfield
Approximation enabled (kR >> 1)
Monitor ff_1900.0000 [1]
Component Abs
Output Realized Gain
Frequency 1900
Rad. effic. -2.051 dB
Tot. effic. -2.059 dB
rlzd.Gain 6.641 dB

FIGURE 21

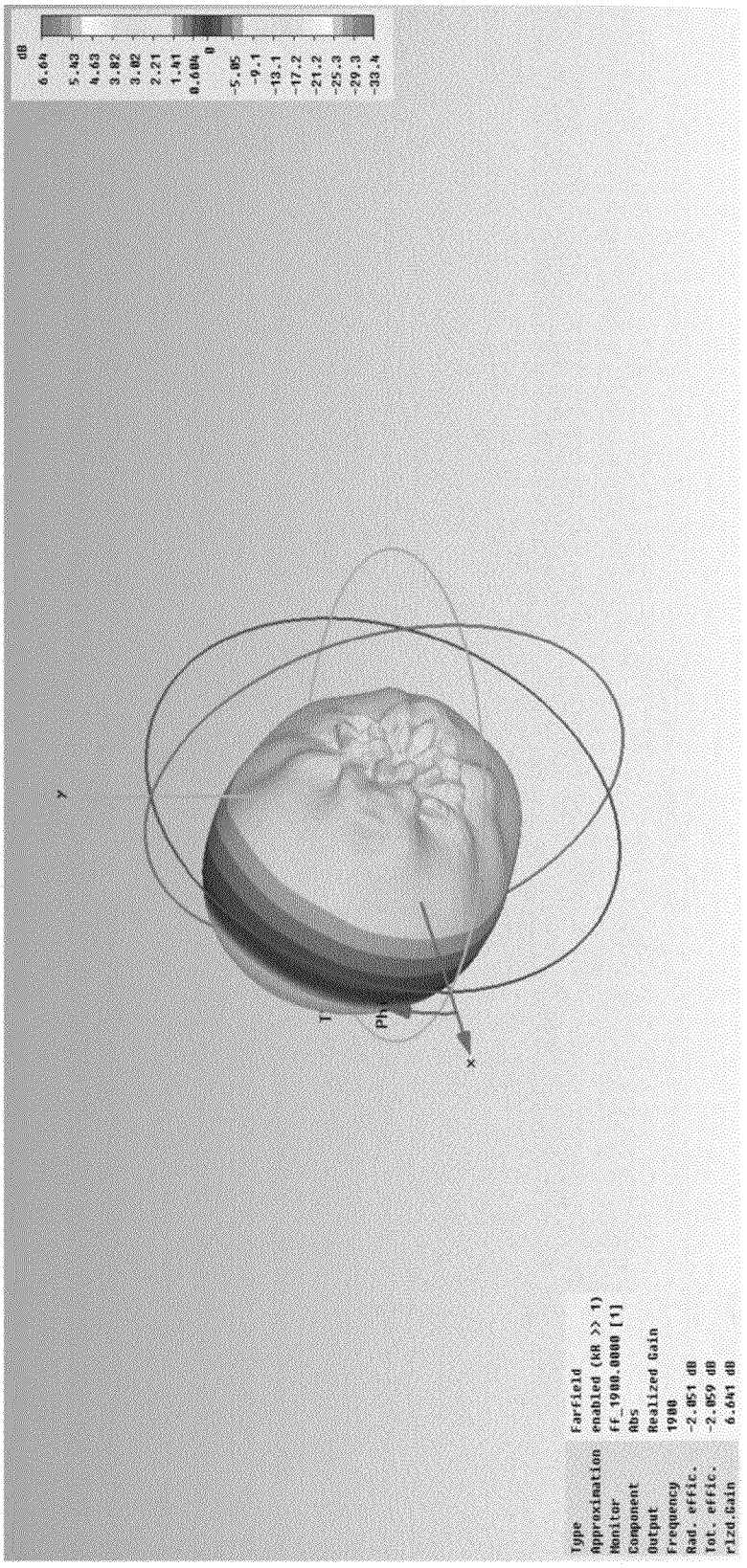
dB
6.64
5.43
4.63
3.82
3.02
2.21
1.41
0.604
0
-5.05
-9.1
-13.1
-17.2
-21.2
-25.3
-29.3
-33.4
Y
T
Ph
X
Type Farfield
Approximation enabled (kR >> 1)
Monitor ff_1900.0000 [1]
Component Abs
Output Realized Gain
Frequency 1900
Rad. effic. -2.051 dB
Tot. effic. -2.059 dB
rlzd.Gain 6.641 dB

FIGURE 22

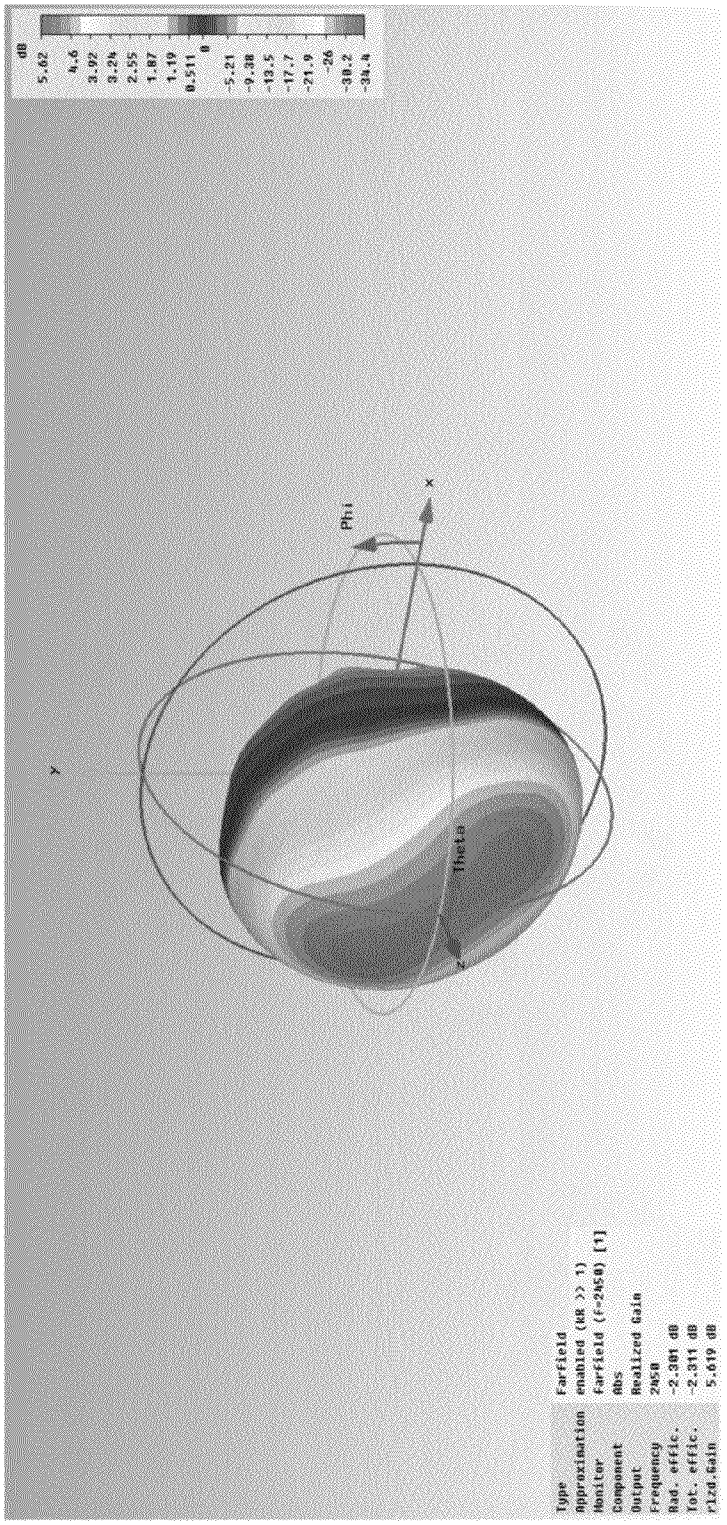
dB
5.62
4.6
3.92
3.24
2.55
1.87
1.19
0.511
0
-5.21
-9.38
-13.5
-17.7
-21.9
-26
-30.2
-34.4
Y
Phi
X
Theta
Z
Type Farfield
Approximation enabled (kR >> 1)
Monitor farfield (f=2450) [1]
Component Abs
Output Realized Gain
Frequency 2450
Rad. effic. -2.301 dB
Tot. effic. -2.311 dB
rized Gain 5.619 dB

FIGURE 23

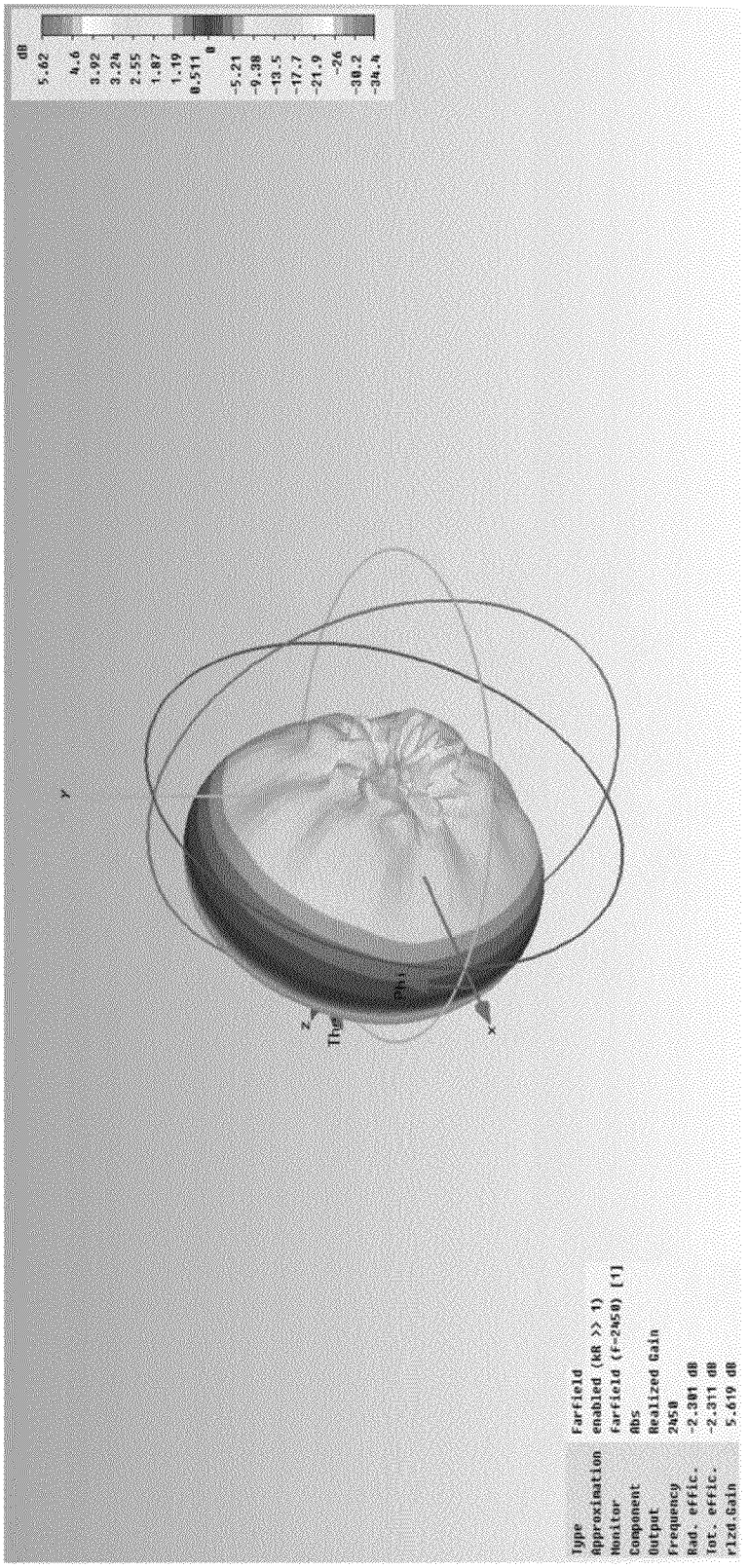
dB
5.62
4.6
3.92
3.24
2.55
1.87
1.19
0.511
0
-5.21
-9.38
-13.5
-17.7
-21.9
-26
-30.2
-34.4
Y
Z
Theta
Phi
X
Type Farfield
Approximation enabled (kR >> 1)
Monitor Farfield (f=2450) [1]
Component Abs
Output Realized Gain
Frequency 2450
Rad. effic. -2.301 dB
Tot. effic. -2.311 dB
rlzd.Gain 5.619 dB

FIGURE 24

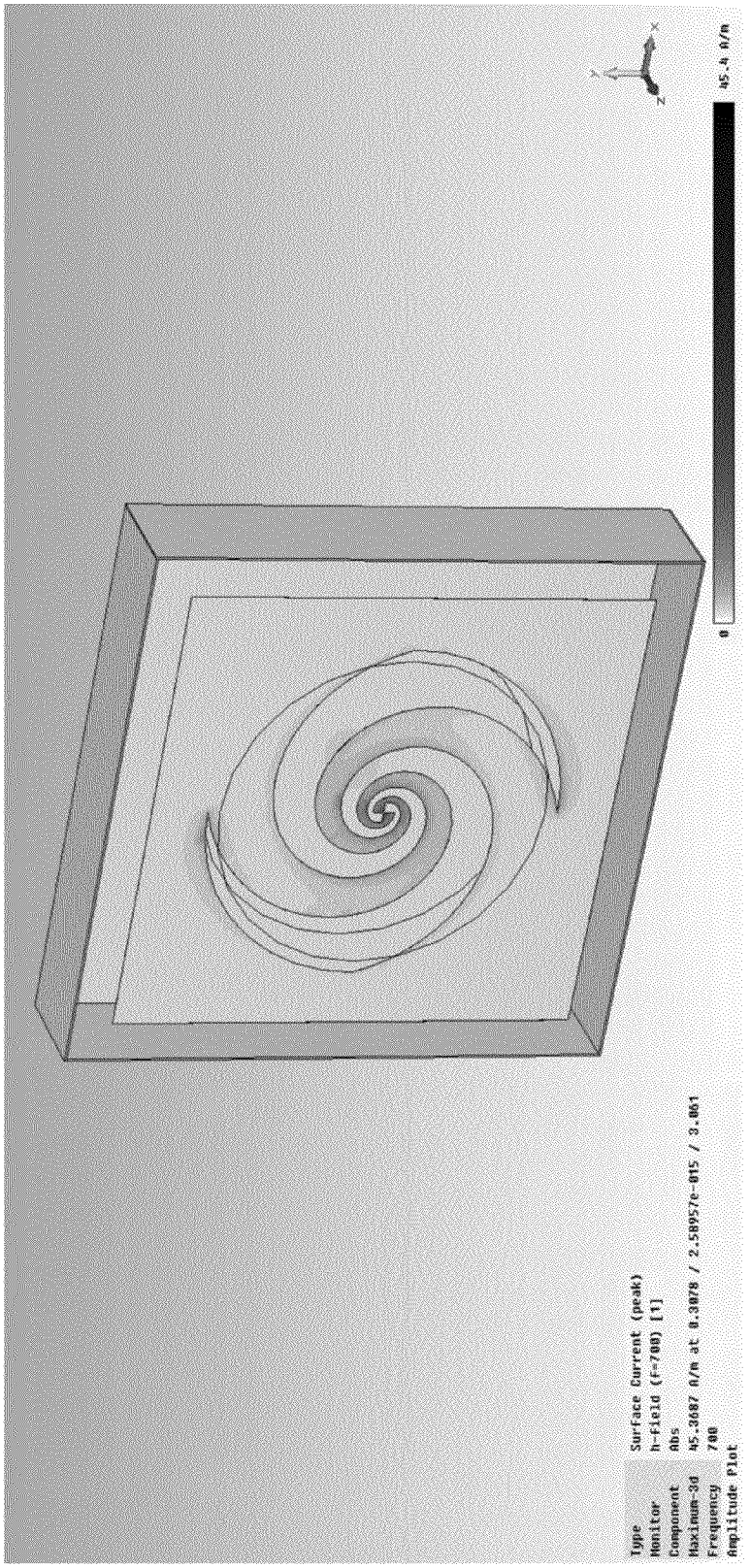
Type Surface Current (peak)
Monitor h-Field (f=700) [1]
Component Abs
Maximum-3d 45.3687 A/m at 0.3078 / 2.58957e-015 / 3.001
Frequency 700
Amplitude Plot
0
45.4 A/m
X
Y
Z

FIGURE 25

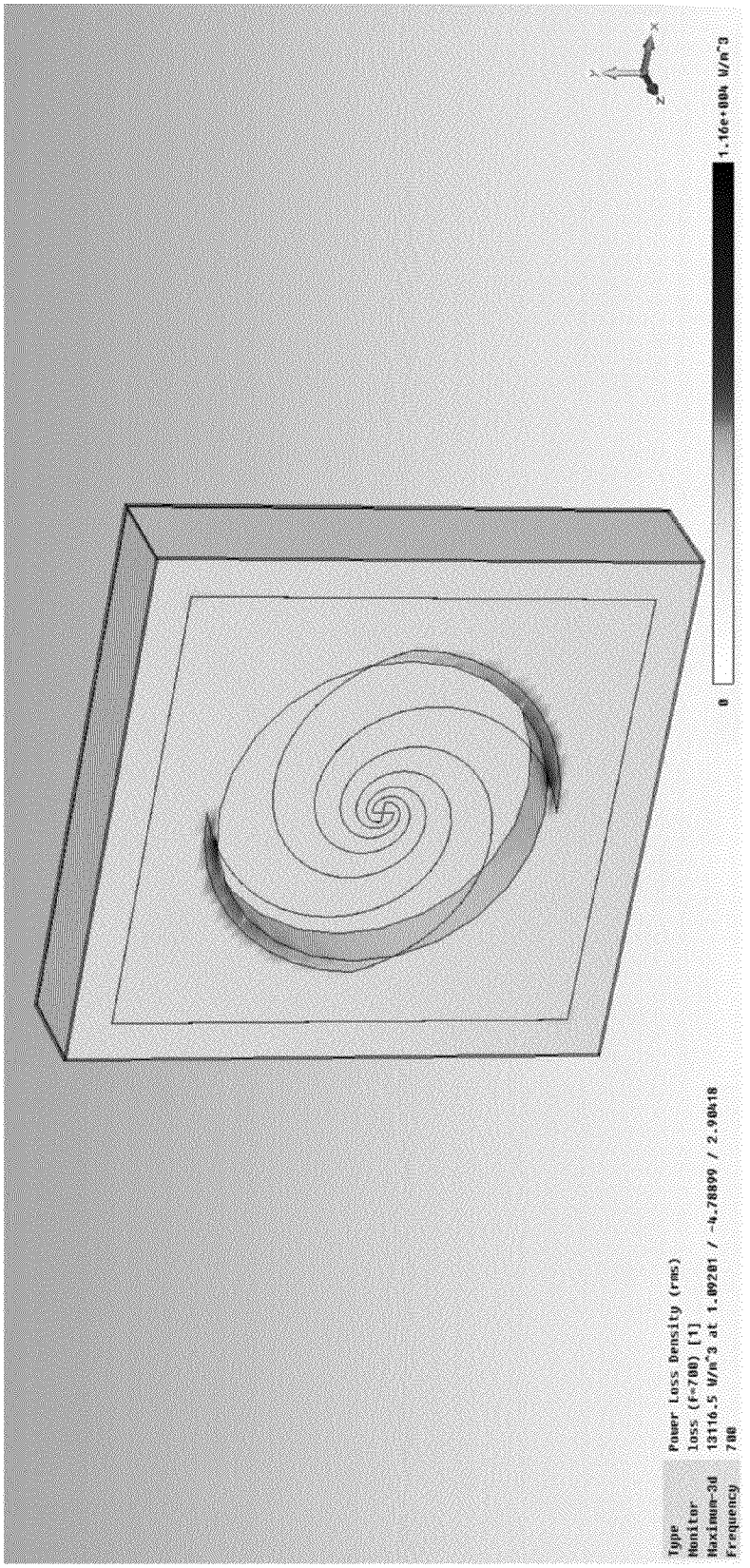
Type Power Loss Density (rms)
Monitor loss (f=700) [1]
Maximum-3d 13116.5 W/m^3 at 1.09201 / -4.78899 / 2.90418
Frequency 700
0
1.16e+004 W/m^3
X
Y
Z

FIGURE 26

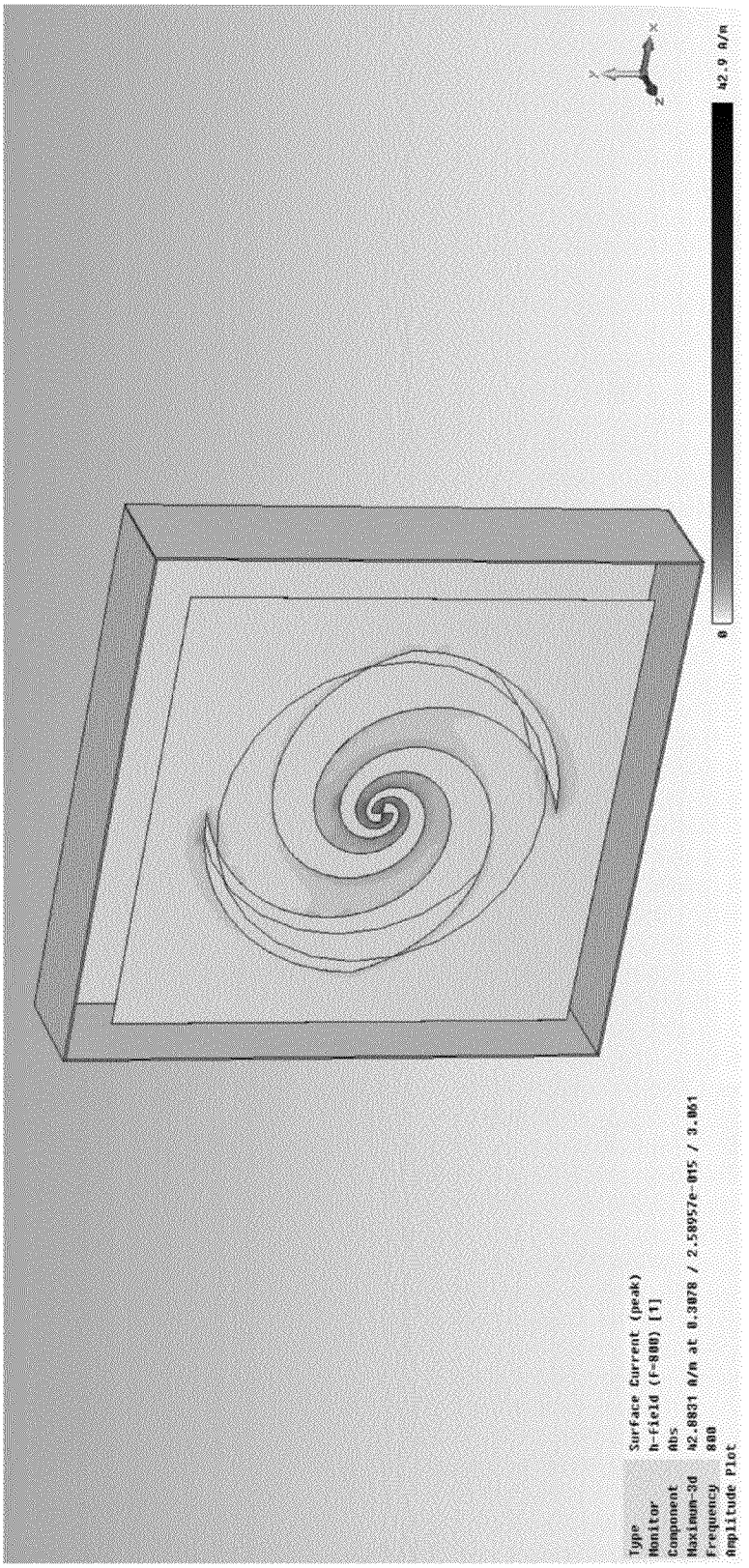
Type Surface Current (peak)
Monitor h-field (f=800) [1]
Component Abs
Maximum-3d 42.8831 A/m at 0.3078 / 2.58957e-015 / 3.061
Frequency 800
Amplitude Plot
0
42.9 A/m
X
Y
Z

FIGURE 27

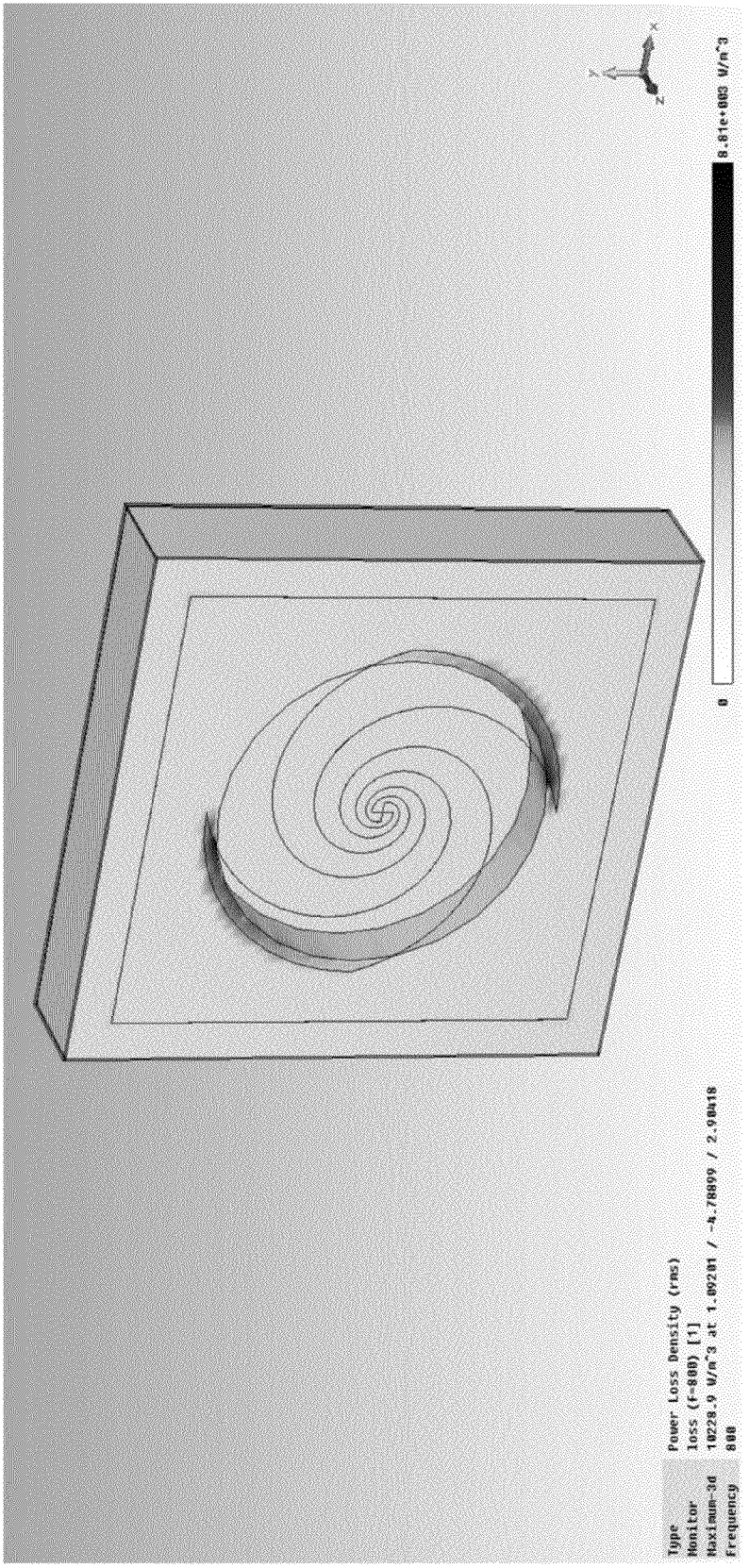
Type Power Loss Density (rms)
Monitor loss (f=800) [1]
Maximum-3d 10228.9 W/m^3 at 1.09201 / -4.78899 / 2.90418
Frequency 800
0
8.81e+003 W/m^3
X
Y
Z

FIGURE 28

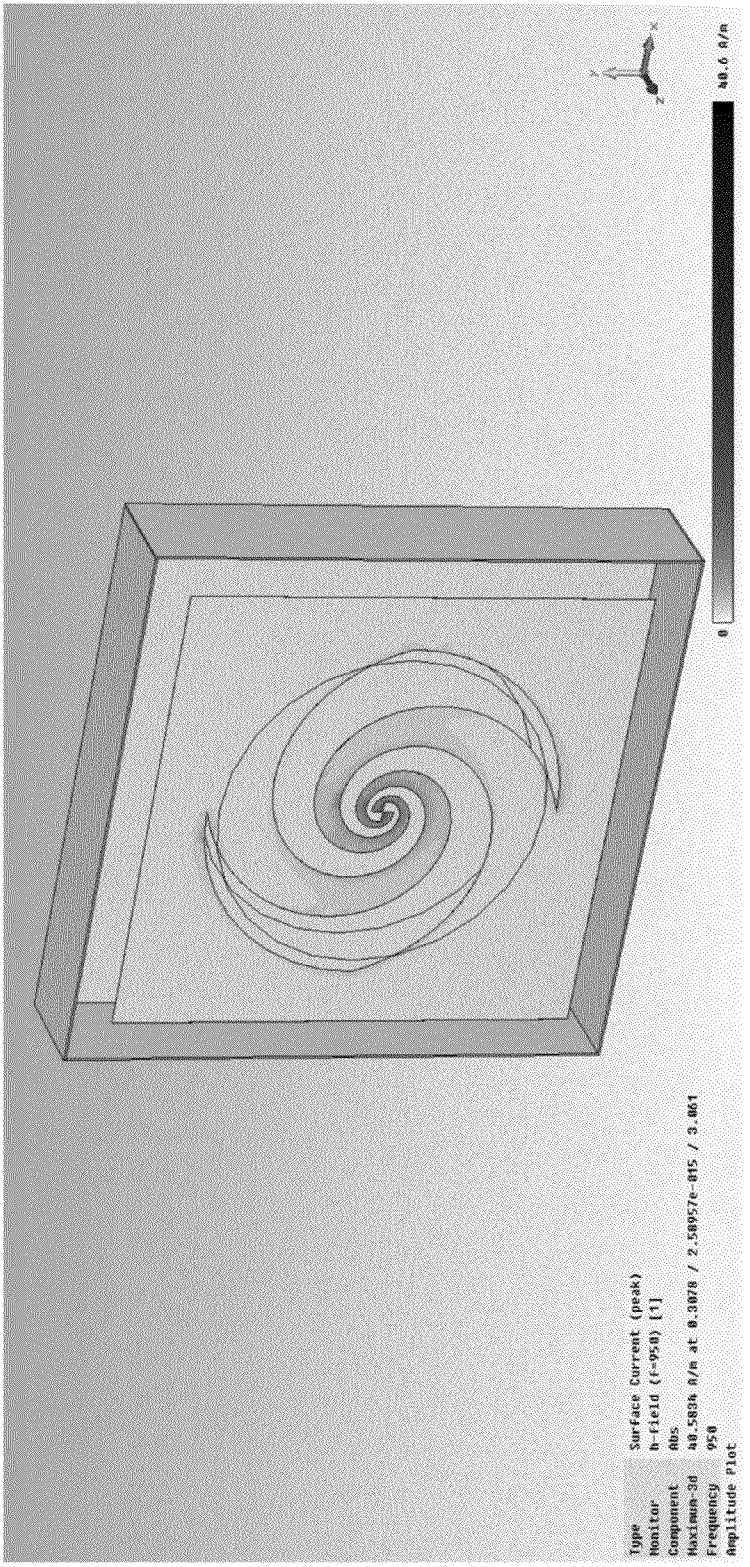
Type Surface Current (peak)
Monitor h-Field (f=950) [1]
Component Abs
Maximum-3d 40.5834 A/m at 0.3078 / 2.58957e-815 / 3.861
Frequency 950
Amplitude Plot
0
40.6 A/m
X
Y
Z

FIGURE 29

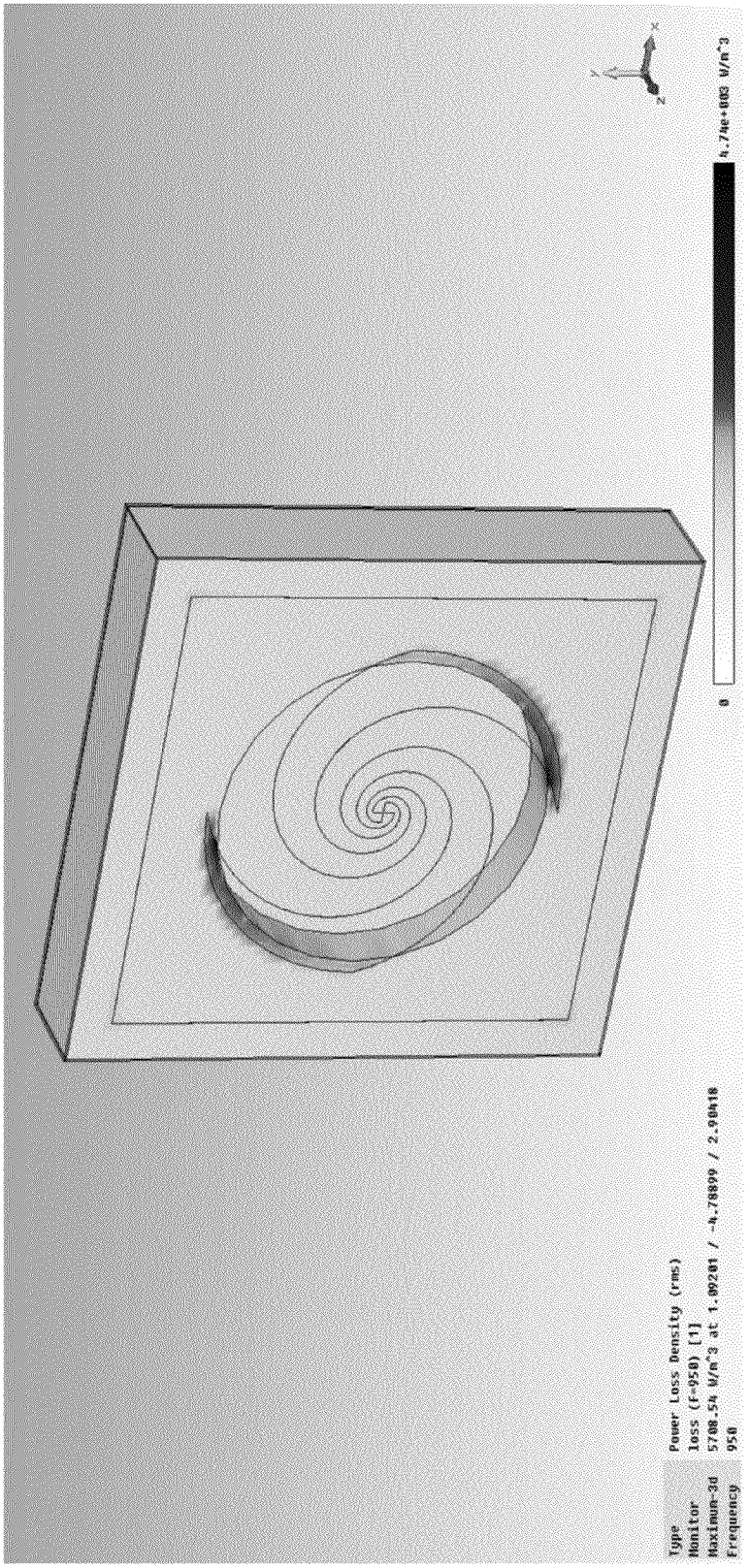
Type Power Loss Density (rms)
Monitor loss (f=950) [1]
Maximum-3d 5708.54 W/m^3 at 1.09281 / -4.78899 / 2.90418
Frequency 950
0
4.74e+003 W/m^3
x
y
z

FIGURE 30

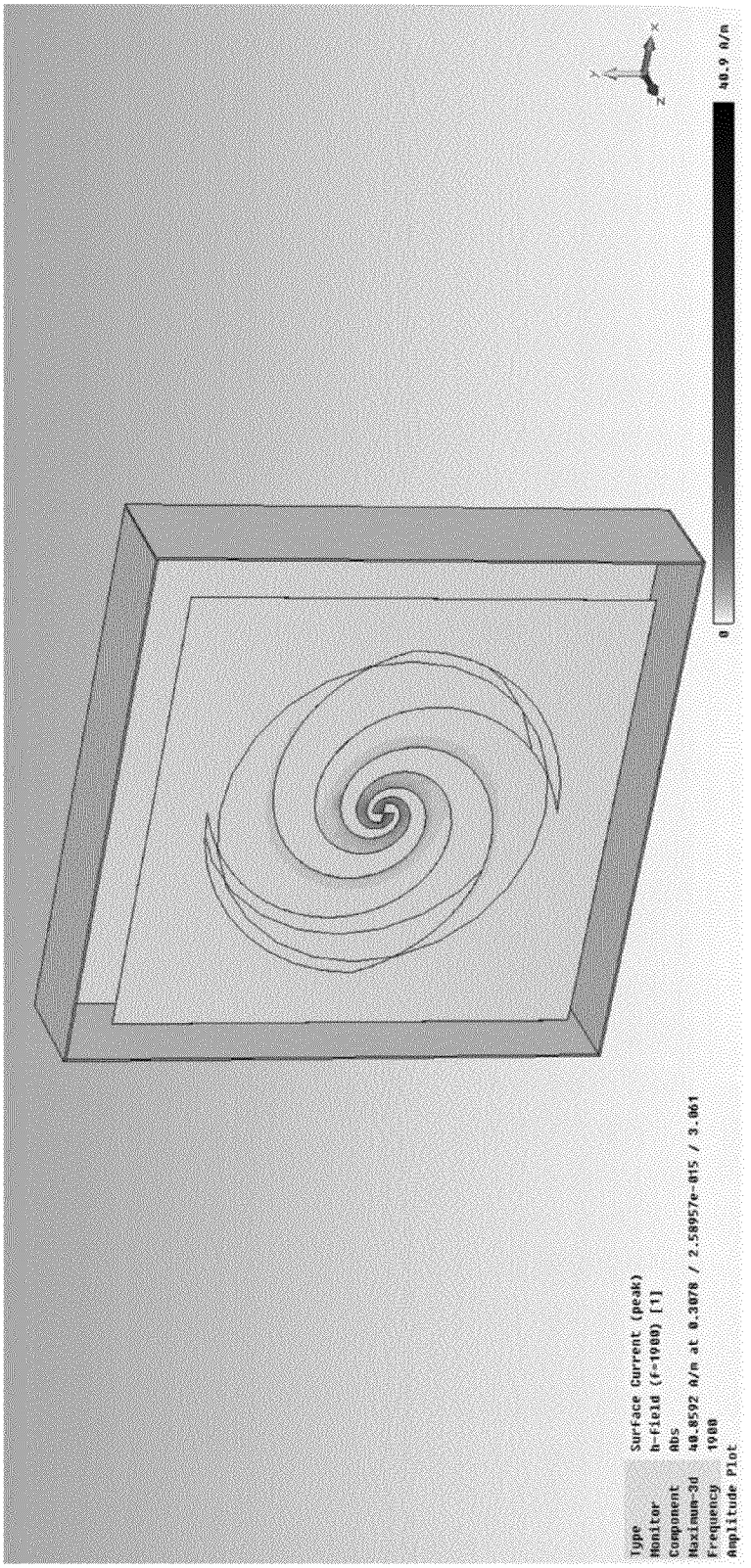
Type Surface Current (peak)
Monitor h-field (f=1900) [1]
Component Abs
Maximum-3d 40.8592 A/m at 0.3078 / 2.58957e-015 / 3.061
Frequency 1900
Amplitude Plot
0
40.9 A/m
X
Y
Z

FIGURE 31

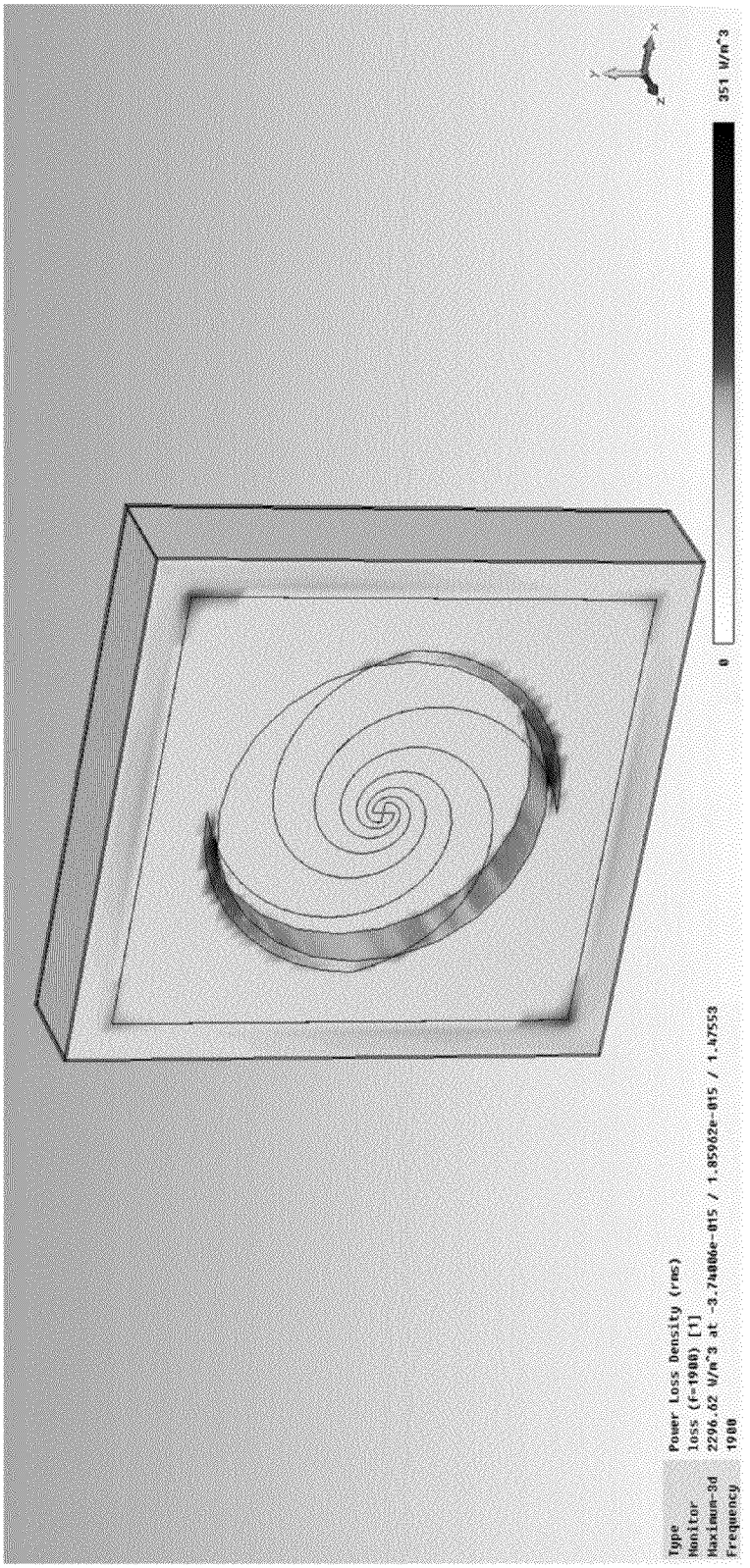
Type Power Loss Density (rms)
Monitor loss (f=1900) [1]
Maximum-3d 2296.62 W/m^3 at -3.74806e-015 / 1.85962e-015 / 1.47553
Frequency 1900
0
351 W/m^3
X
Y
Z

FIGURE 32

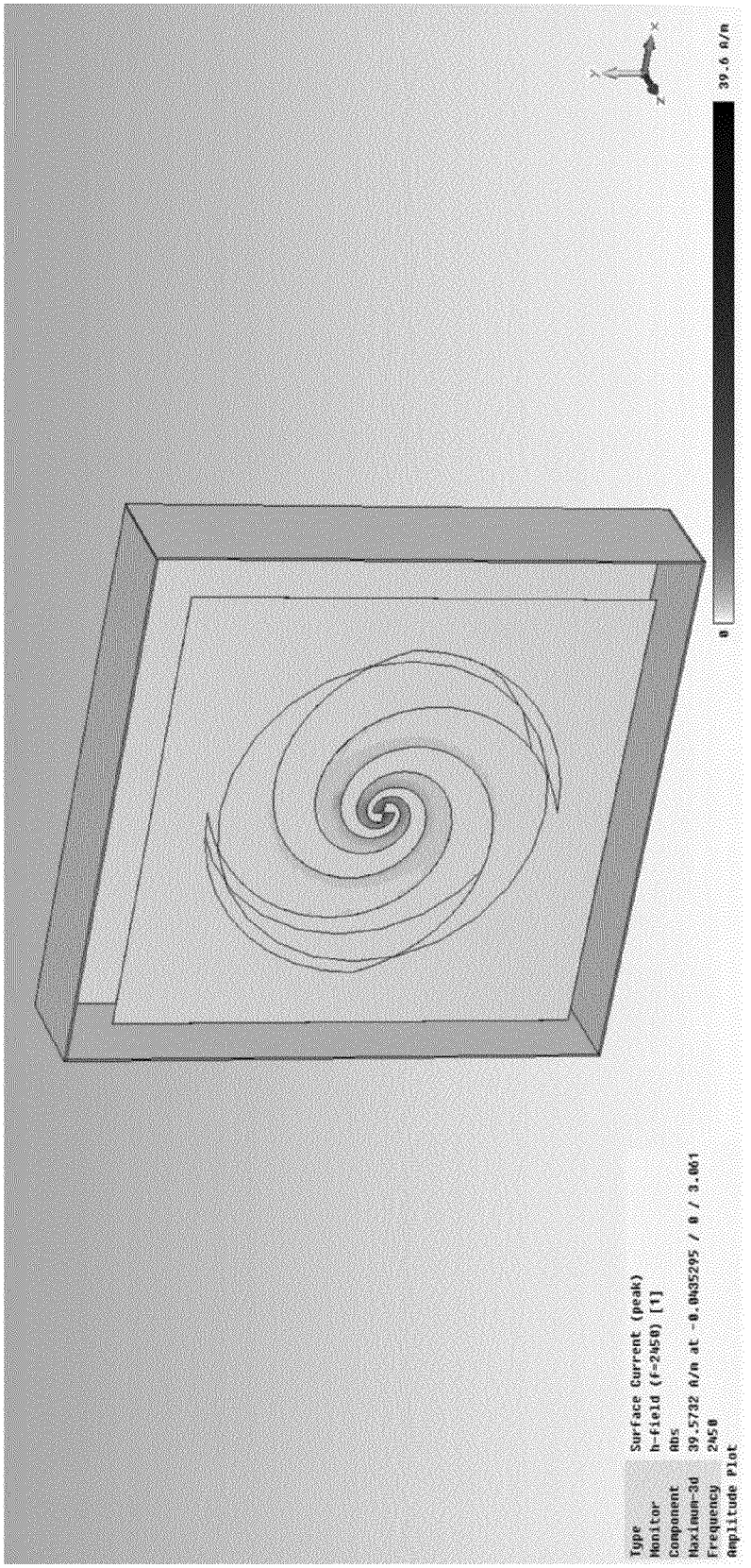
Type Surface Current (peak)
Monitor h-field (f=2450) [1]
Component Abs
Maximum-3d 39.5732 A/m at -0.0435295 / 0 / 3.061
Frequency 2450
Amplitude Plot
0
39.6 A/m
X
Y
Z

FIGURE 33

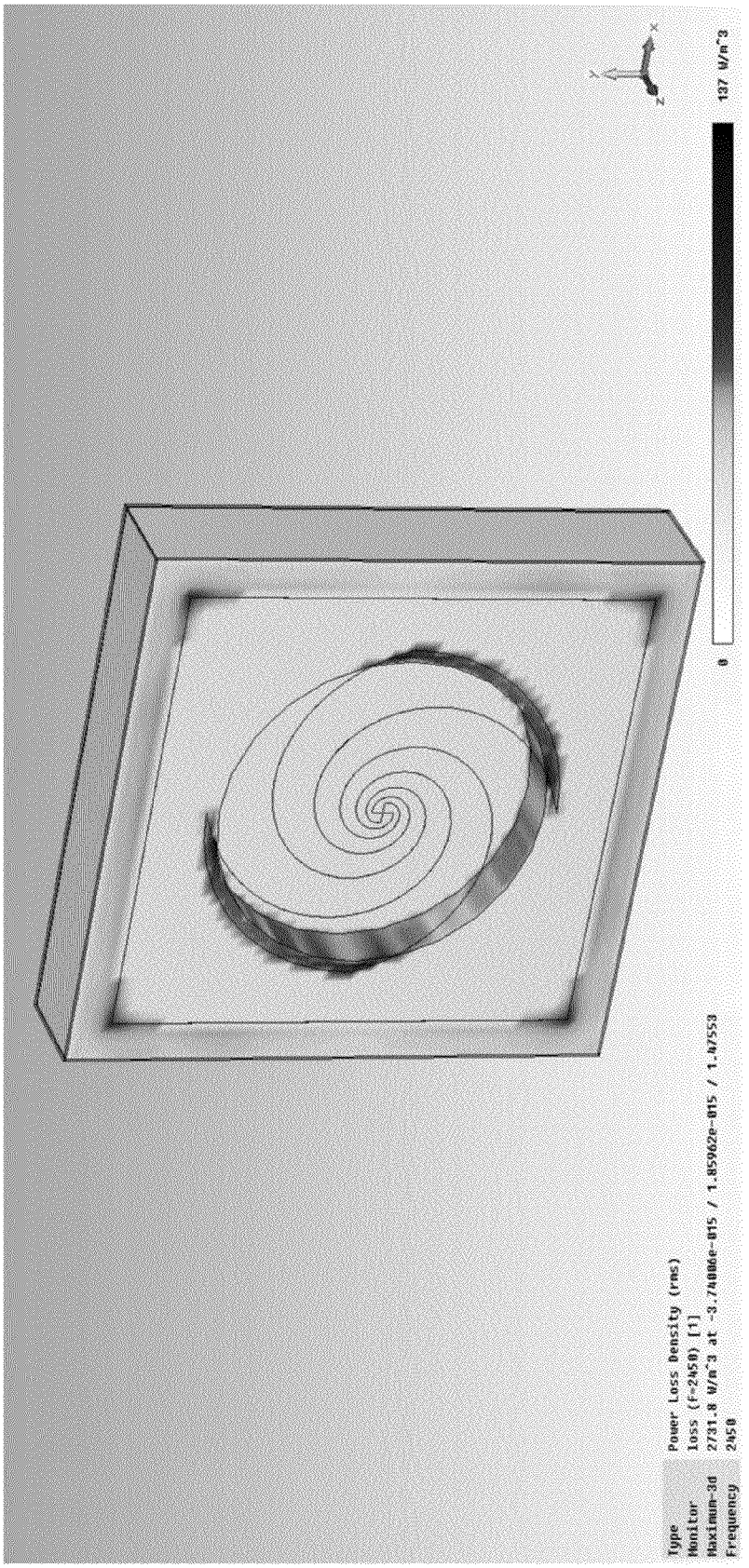
Type Power Loss Density (rms)
Monitor loss (f=2450) [1]
Maximum-3d 2731.8 W/m^3 at -3.74806e-015 / 1.859626-015 / 1.47553
Frequency 2450
0
137 W/m^3
X
Y
Z

FIGURE 34

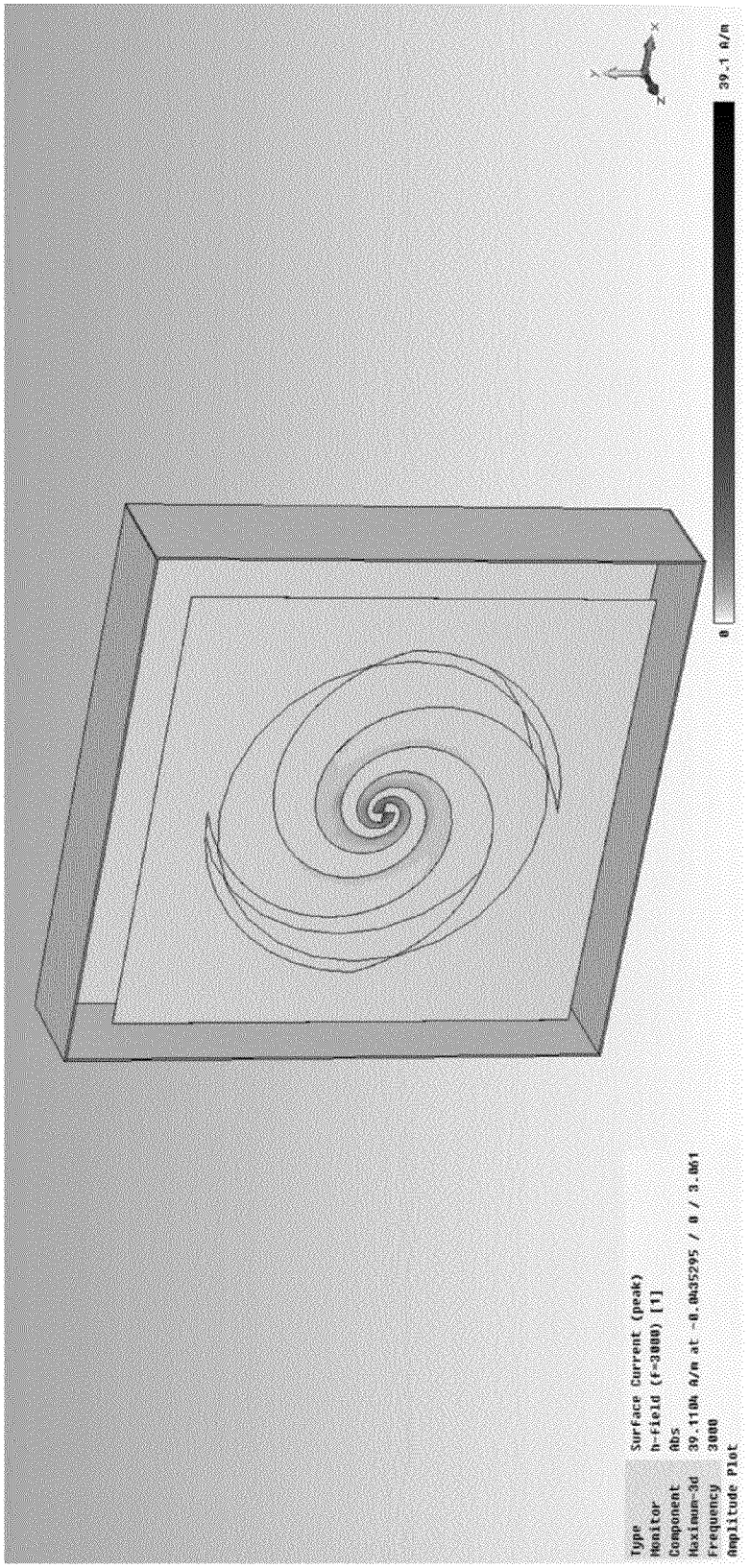
Type Surface Current (peak)
Monitor h-field (f=3000) [1]
Component Abs
Maximum-3d 39.1104 A/m at -0.0435295 / 0 / 3.861
Frequency 3000
Amplitude Plot
0
39.1 A/m
X
Y
Z

FIGURE 35

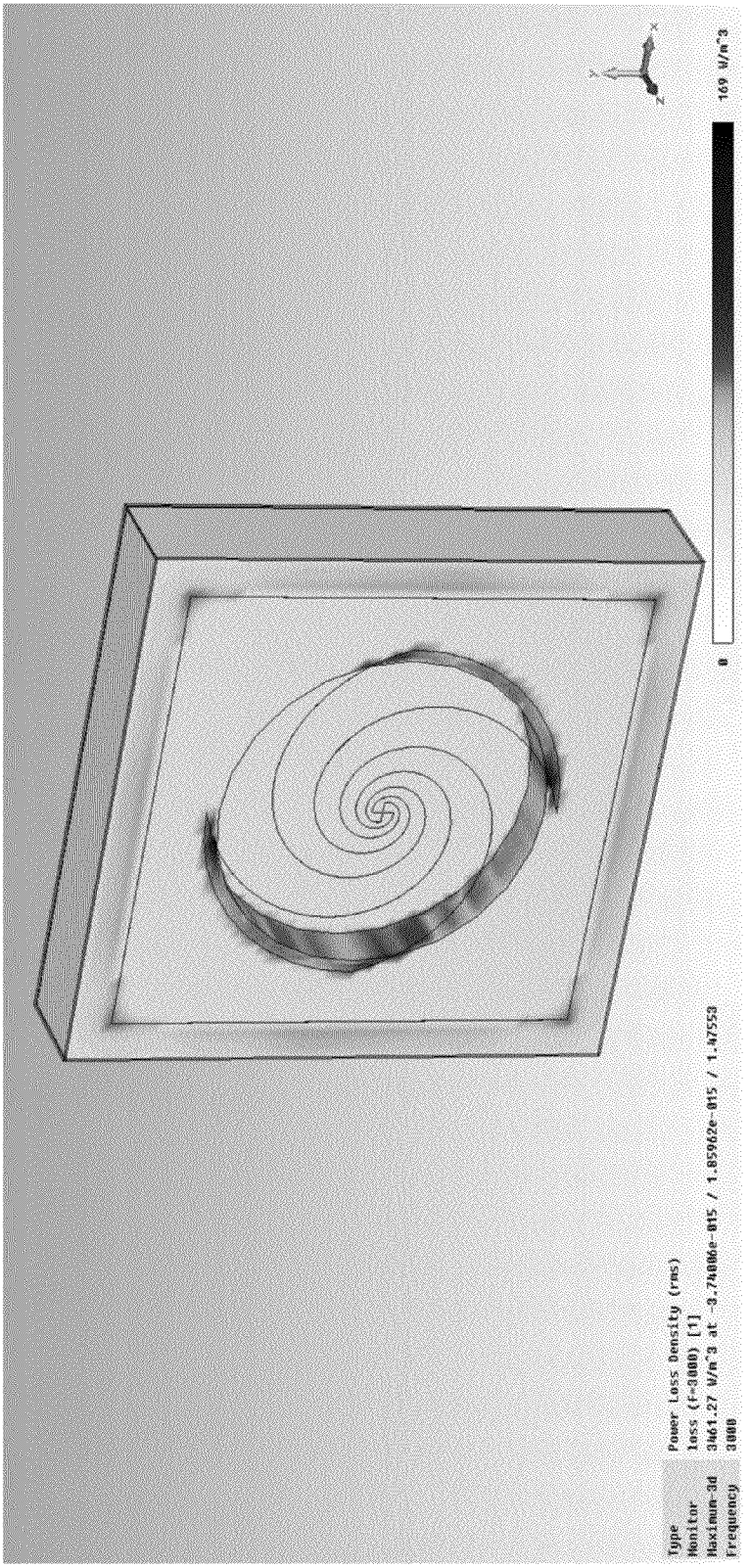
Type Power Loss Density (rms)
Monitor loss (f=3000) [1]
Maximum-3d 3461.27 W/m^3 at -3.74086e-015 / 1.85962e-015 / 1.47553
Frequency 3000
0
169 W/m^3
X
Y
Z

FIGURE 36

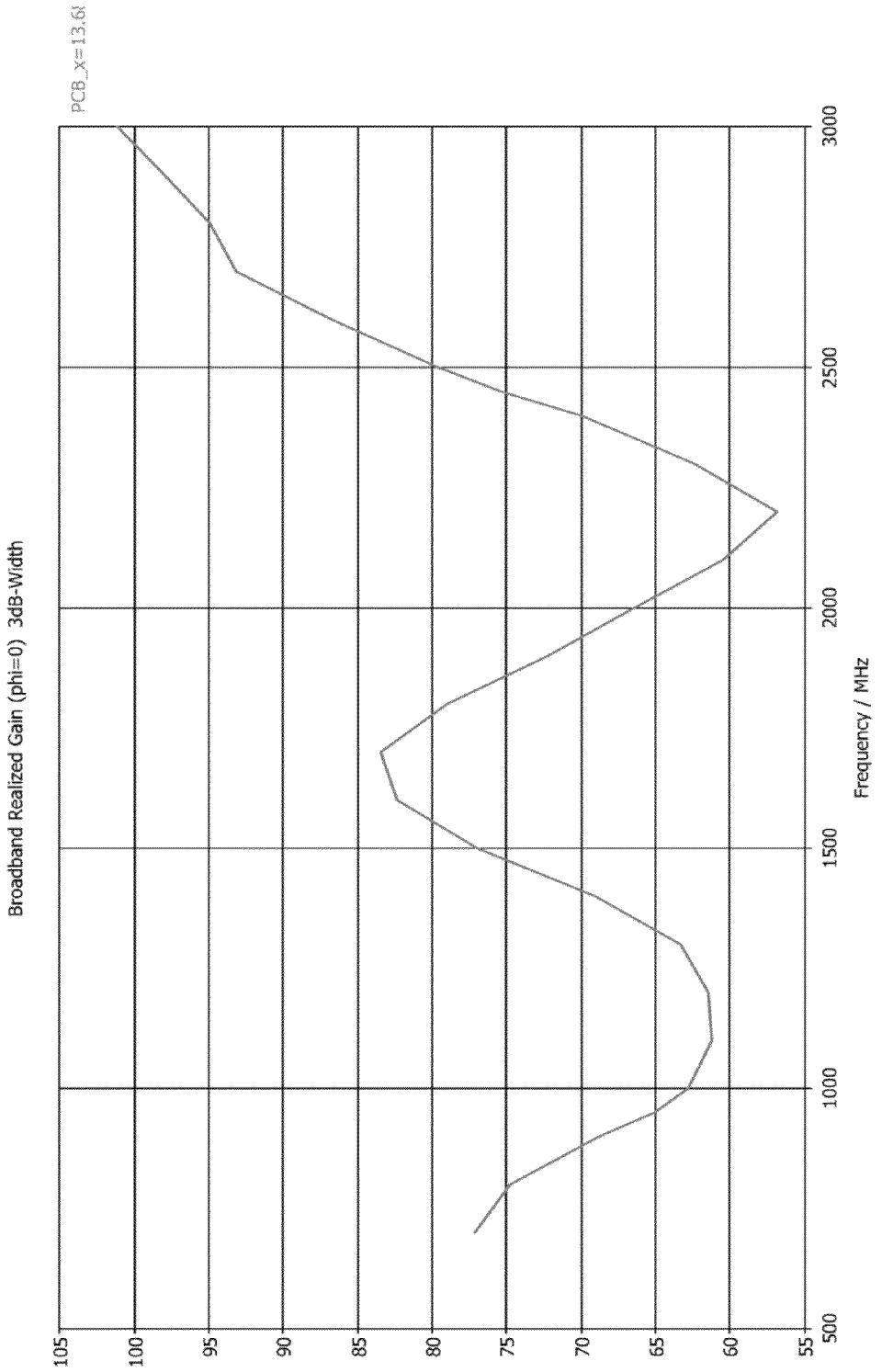
Broadband Realized Gain (phi=0) 3dB-Width
PCB_x=13.6
105
100
95
90
85
80
75
70
65
60
55
500
1000
1500
2000
2500
3000
Frequency / MHz

FIGURE 37

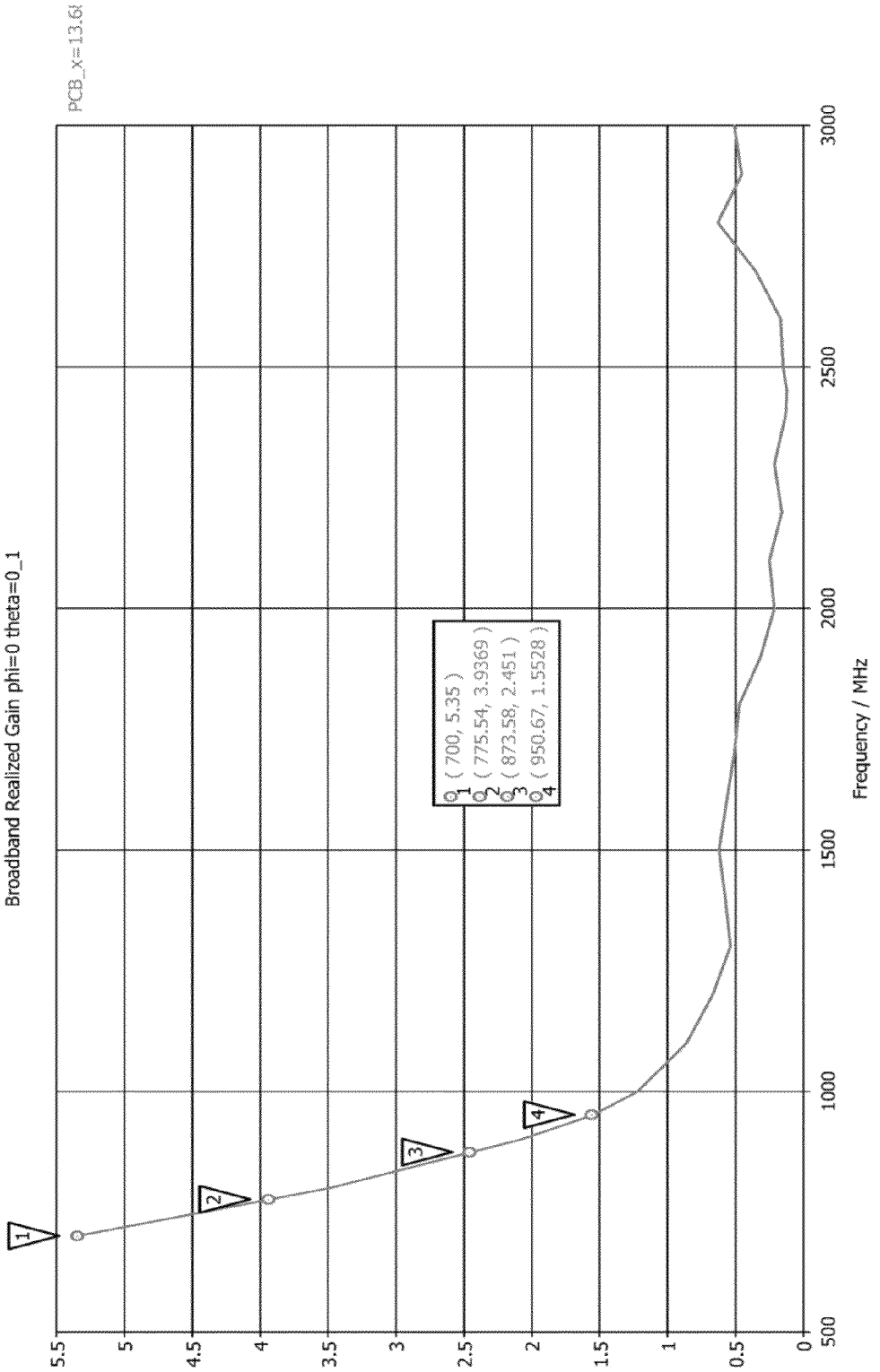
PCB_x=13.6
Broadband Realized Gain phi=0 theta=0_1
1 (700, 5.35)
2 (775.54, 3.9369)
3 (873.58, 2.451)
4 (950.67, 1.5528)
Frequency / MHz
5.5
5
4.5
4
3.5
3
2.5
2
1.5
1
0.5
0
500
1000
1500
2000
2500
3000

FIGURE 38

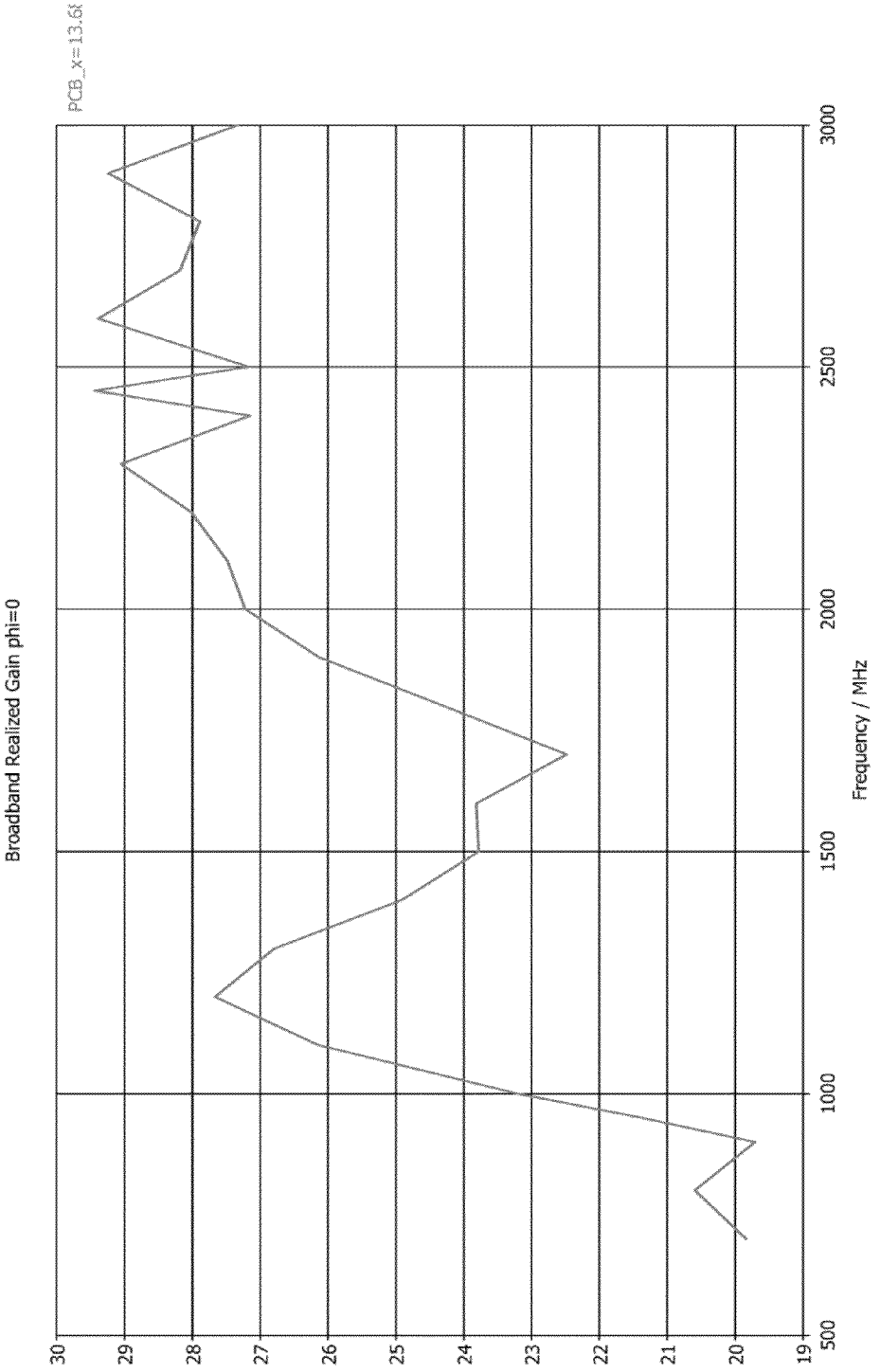
PCB_x=13.6f
Broadband Realized Gain phi=0
30
29
28
27
26
25
24
23
22
21
20
19
500
1000
1500
2000
2500
3000
Frequency / MHz

FIGURE 39

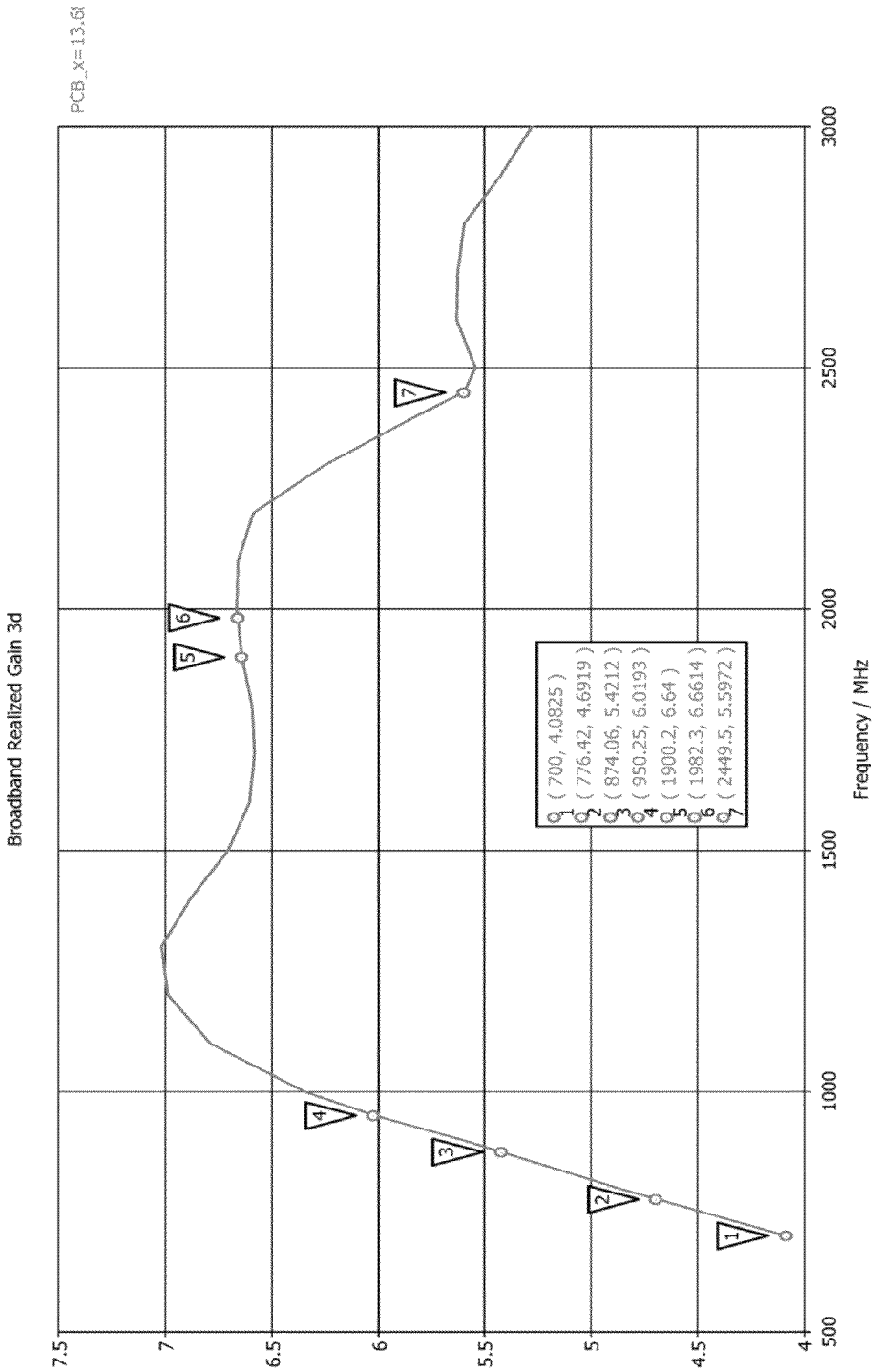
PCB_x=13.6
Broadband Realized Gain 3d
7.5
7
6.5
6
5.5
5
4.5
4
500
1000
1500
2000
2500
3000
Frequency / MHz
1 (700, 4.0825)
2 (776.42, 4.6919)
3 (874.06, 5.4212)
4 (950.25, 6.0193)
5 (1900.2, 6.64)
6 (1982.3, 6.6614)
7 (2449.5, 5.5972)

FIGURE 40

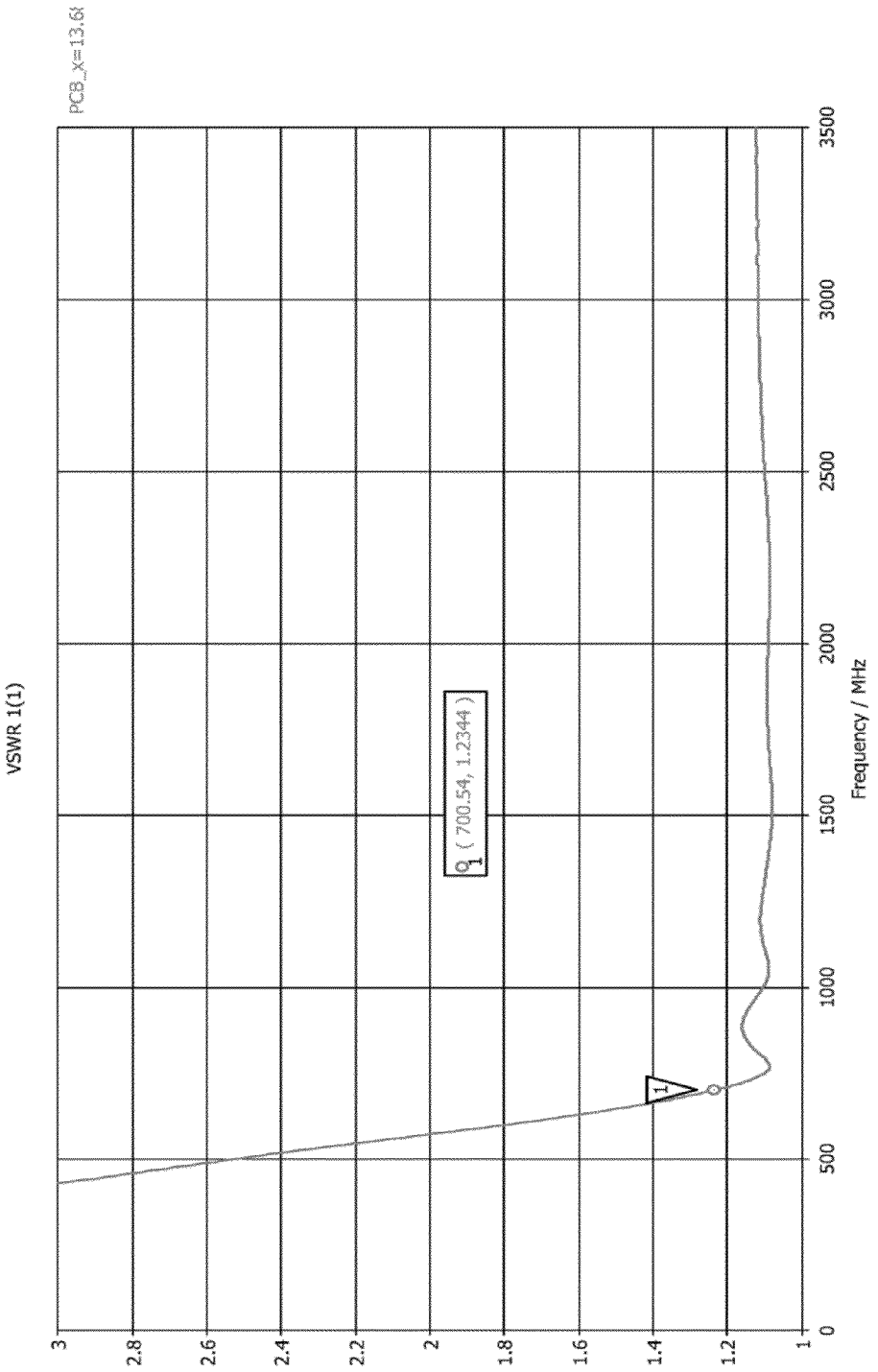
PCB_x=13.6
VSWR 1(1)
3
2.8
2.6
2.4
2.2
2
1.8
1.6
1.4
1.2
1
0
500
1000
1500
2000
2500
3000
3500
Frequency / MHz
1
1 (700.54, 1.2344)

FIGURE 41

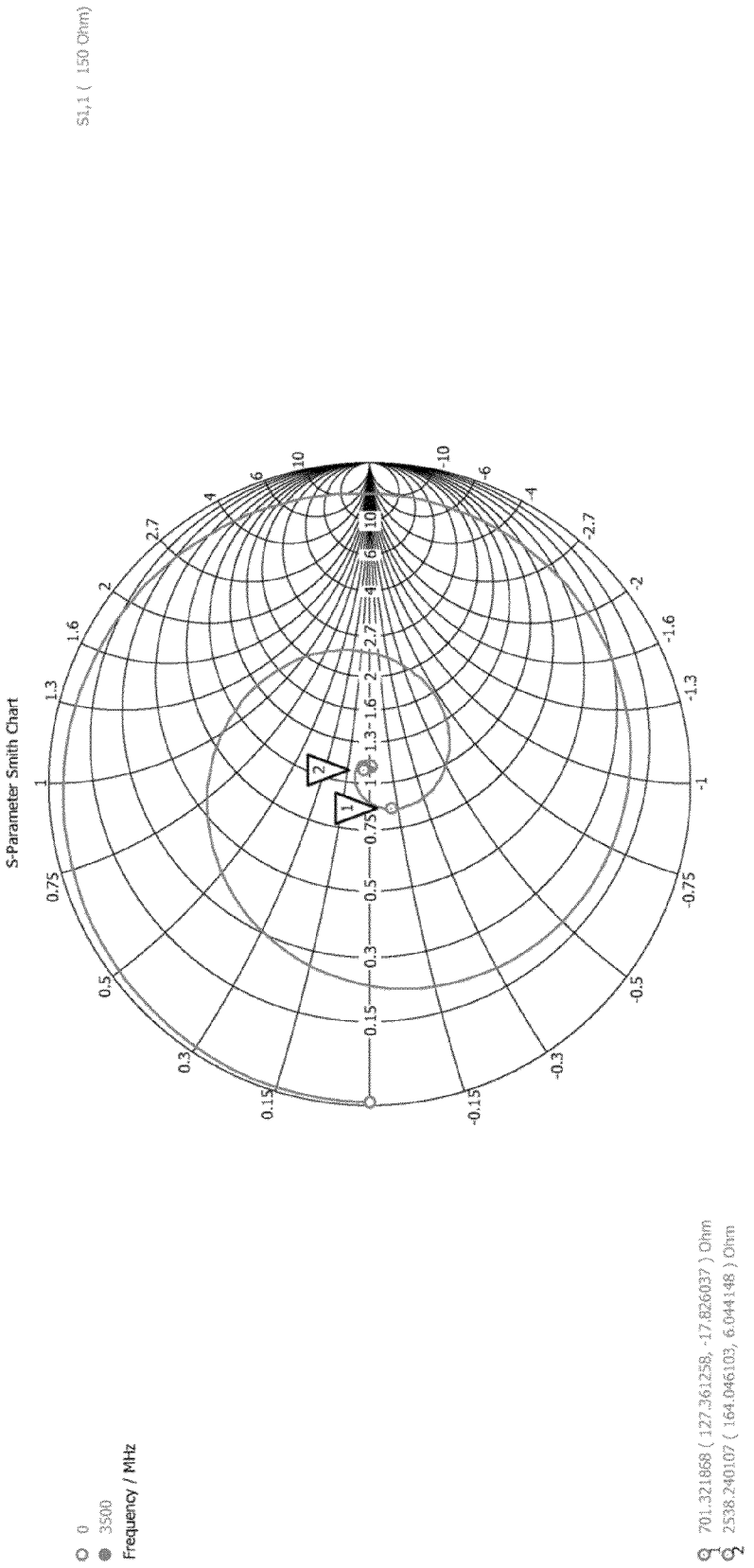
S1,1 (150 Ohm)
S-Parameter Smith Chart
0.15
0.3
0.5
0.75
1
1.3
1.6
2
2.7
4
6
10
-0.15
-0.3
-0.5
-0.75
-1
-1.3
-1.6
-2
-2.7
-4
-6
-10
0
3500
Frequency / MHz
701.321868 (127.361258, -17.826037) Ohm
2538.240107 (164.046103, 6.044148) Ohm

FIGURE 42

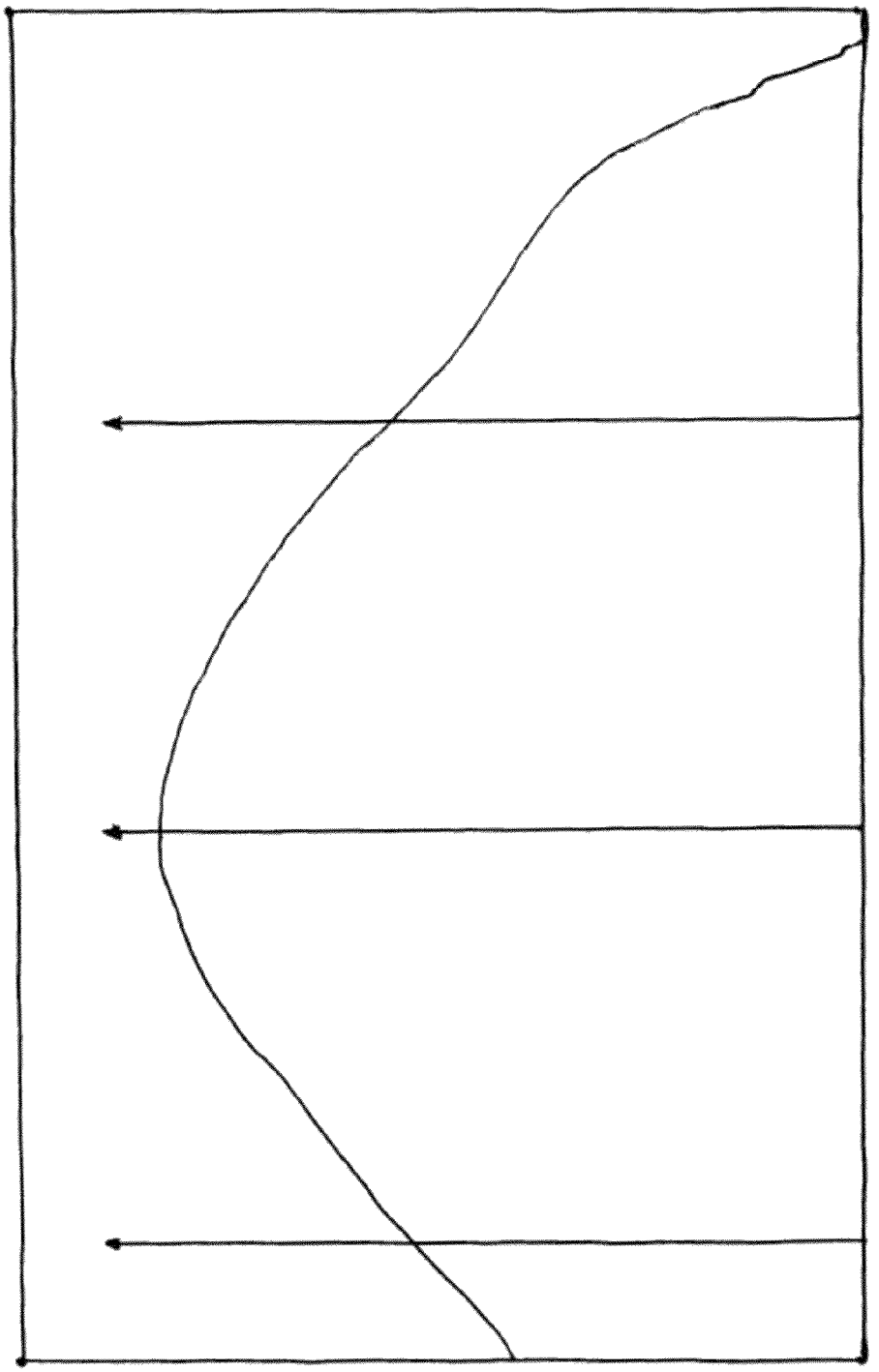

FIGURE 43

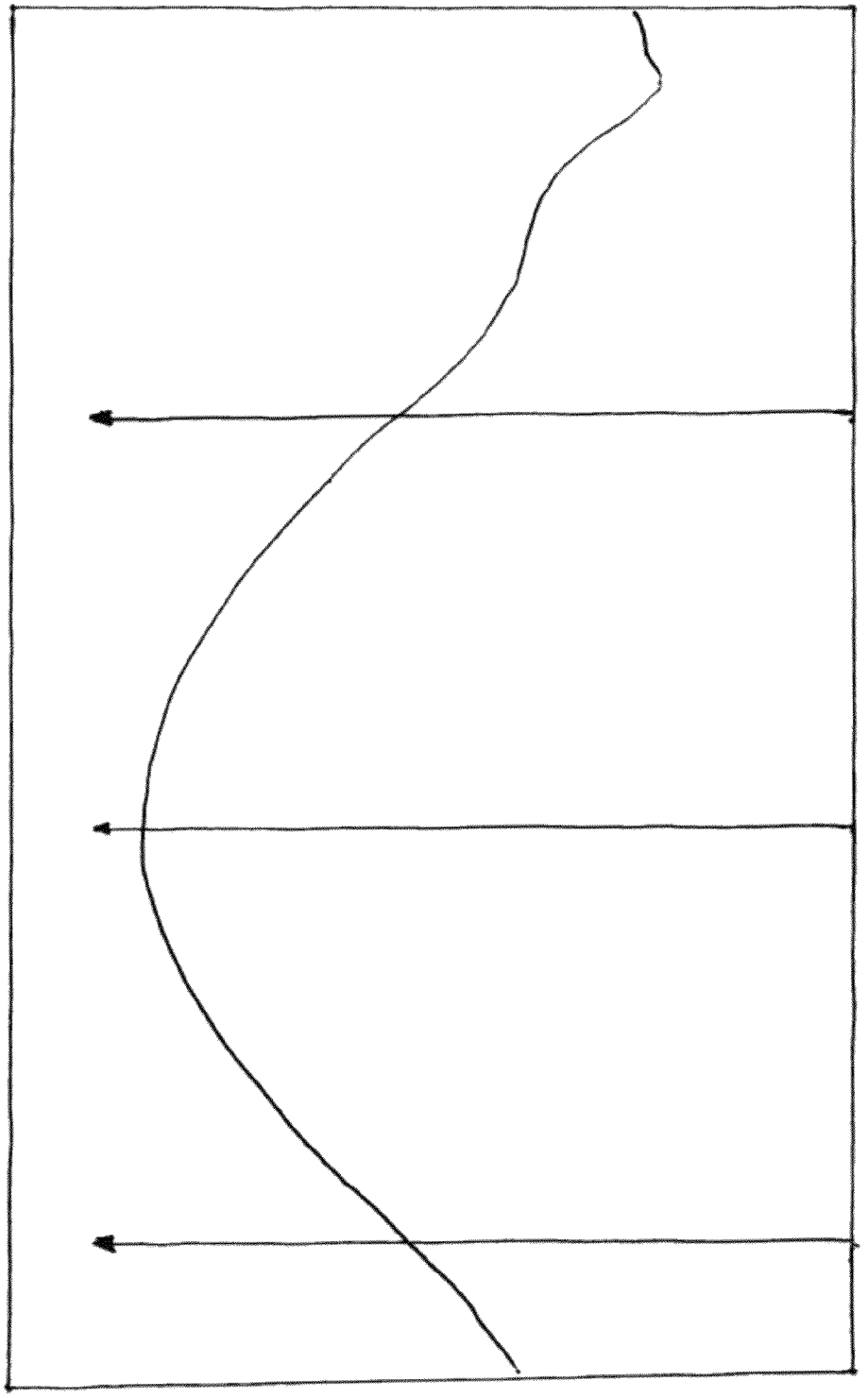

FIGURE 44

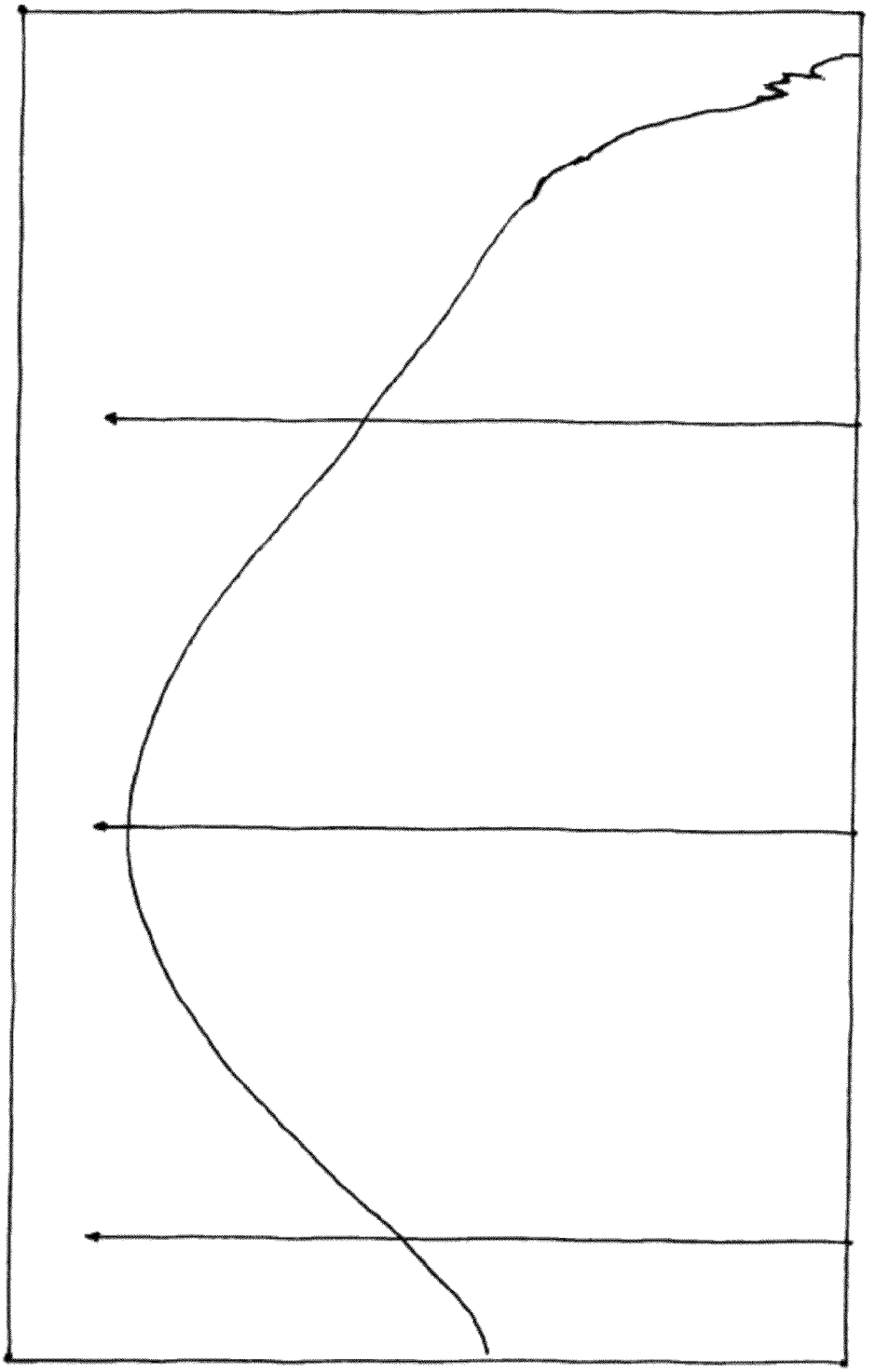

FIGURE 45

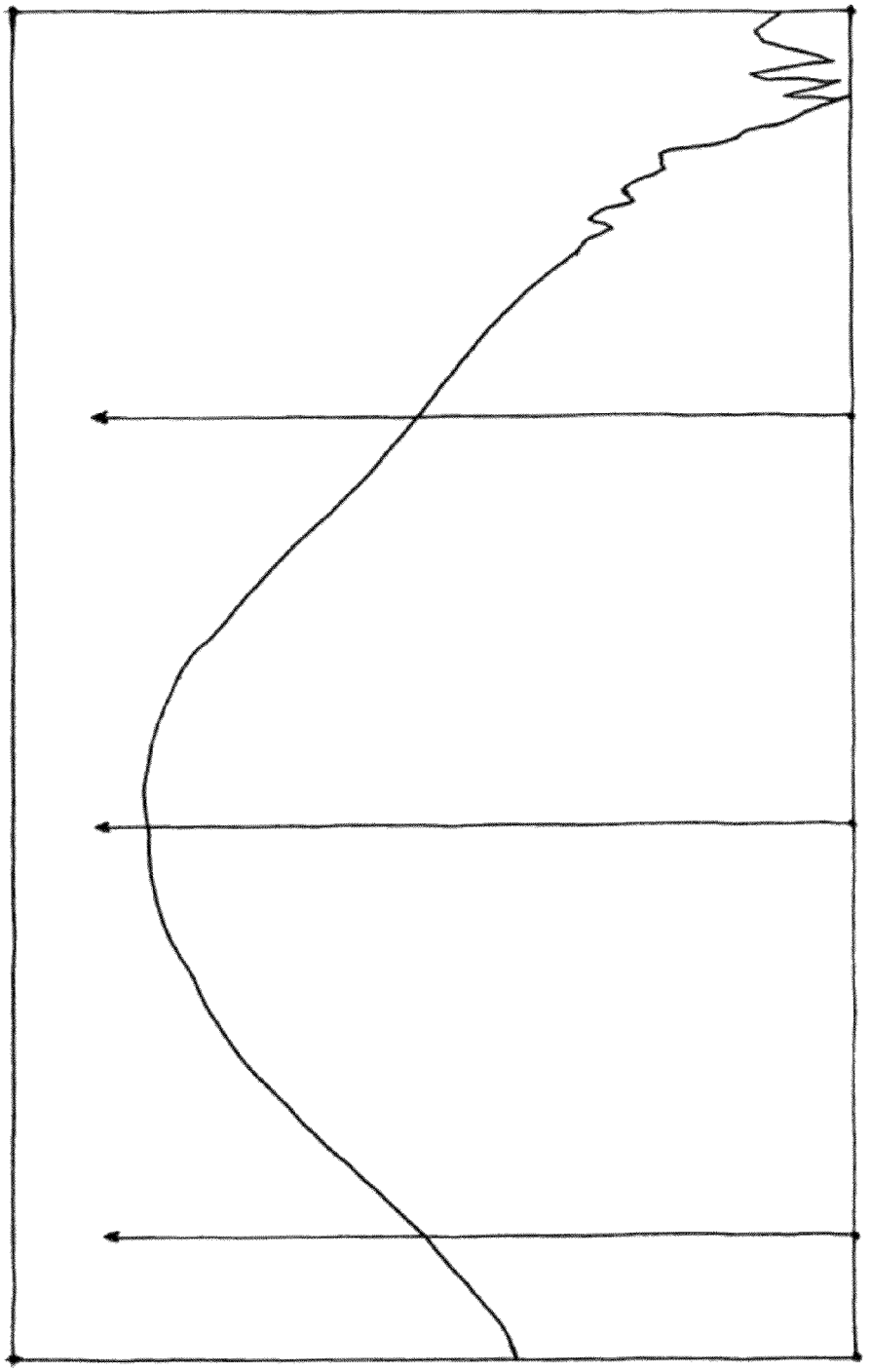

FIGURE 46

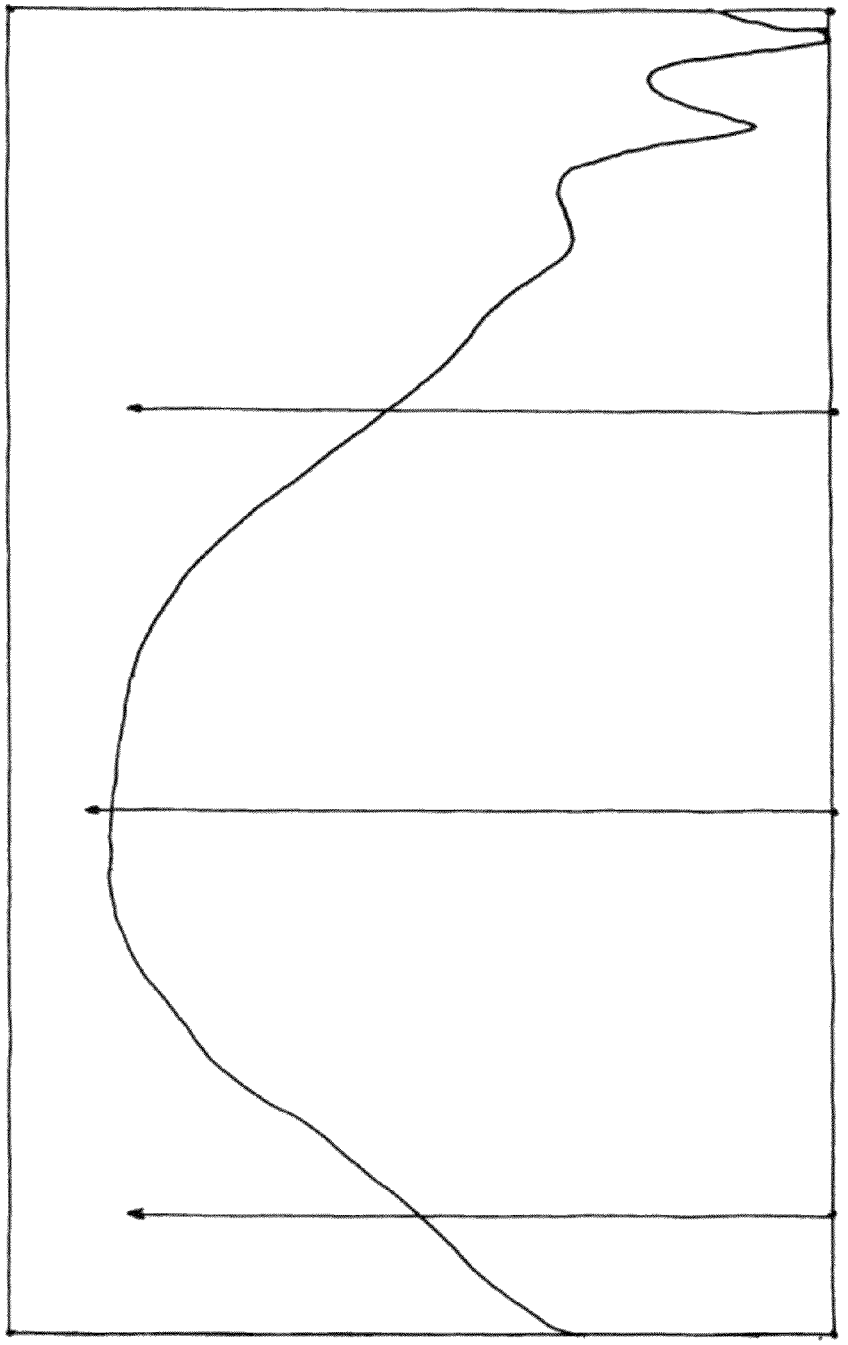

FIGURE 47

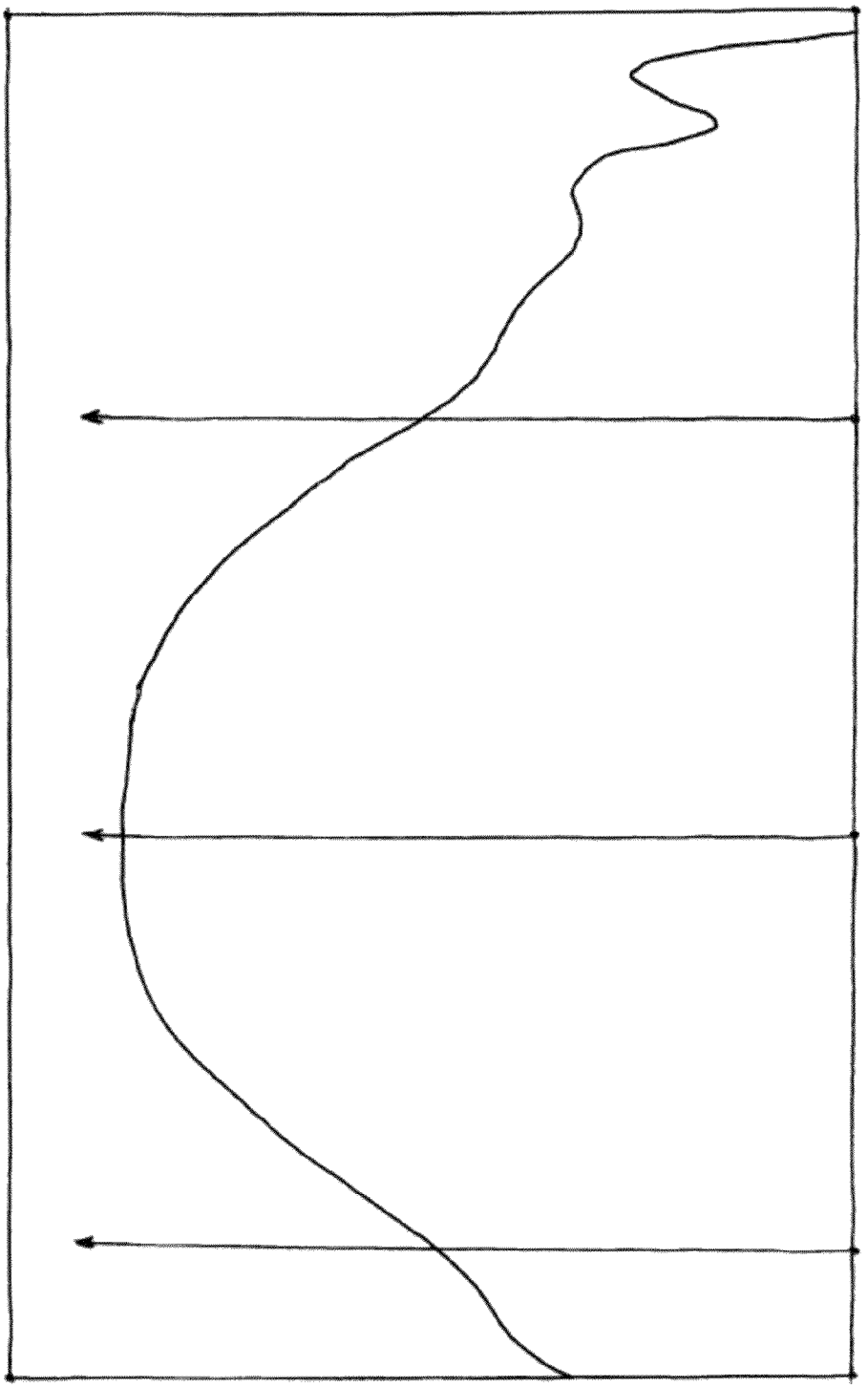

FIGURE 48

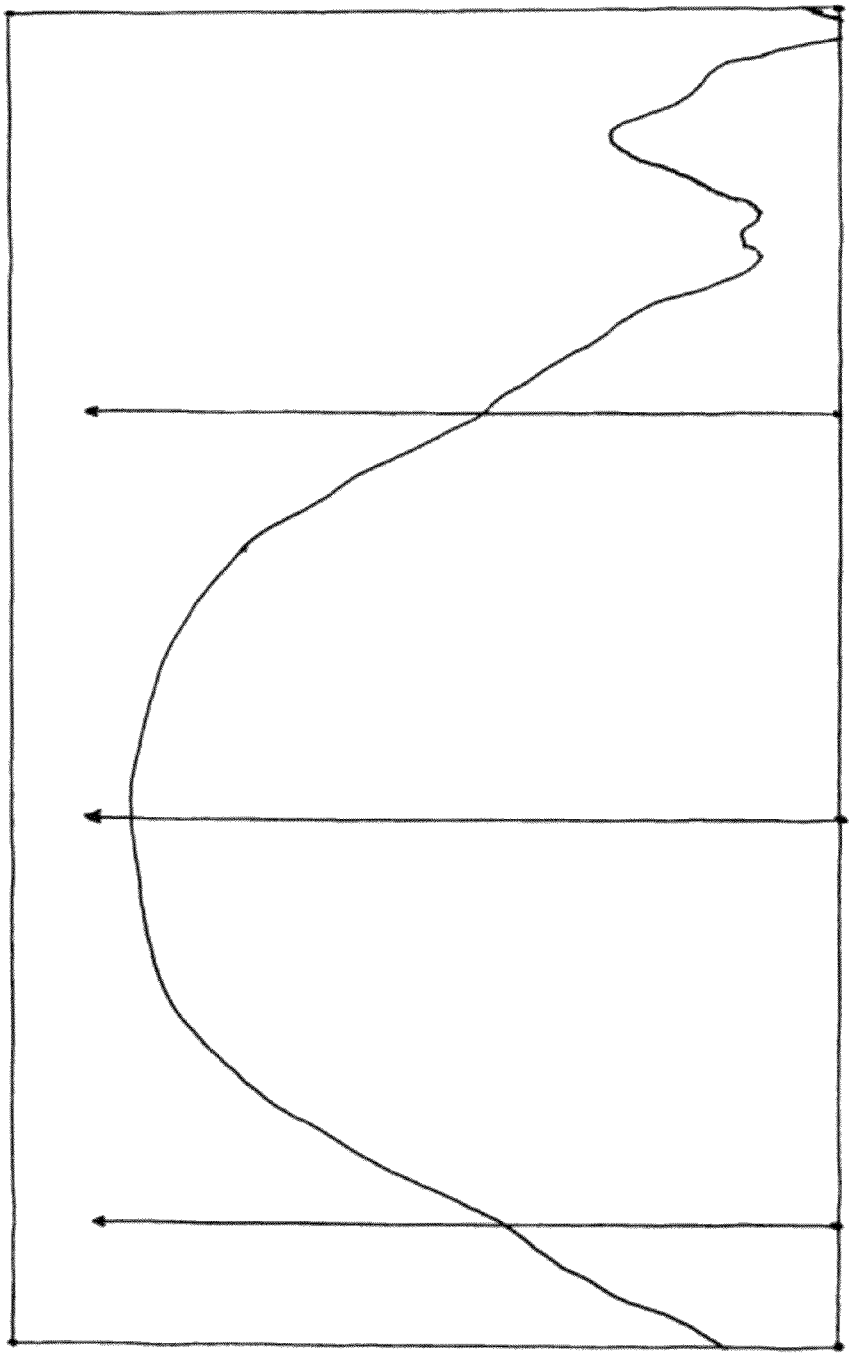

FIGURE 49

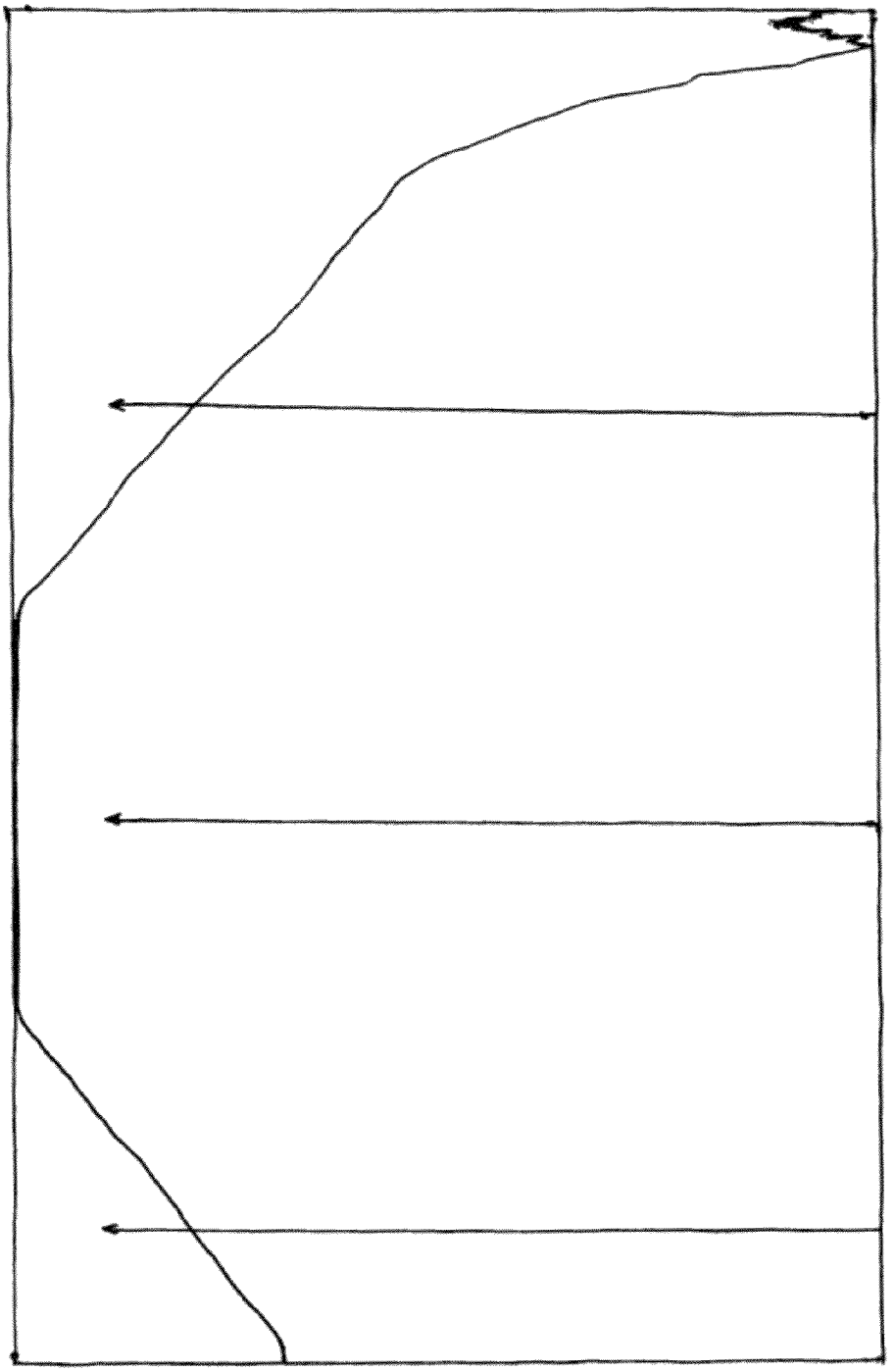

FIGURE 50

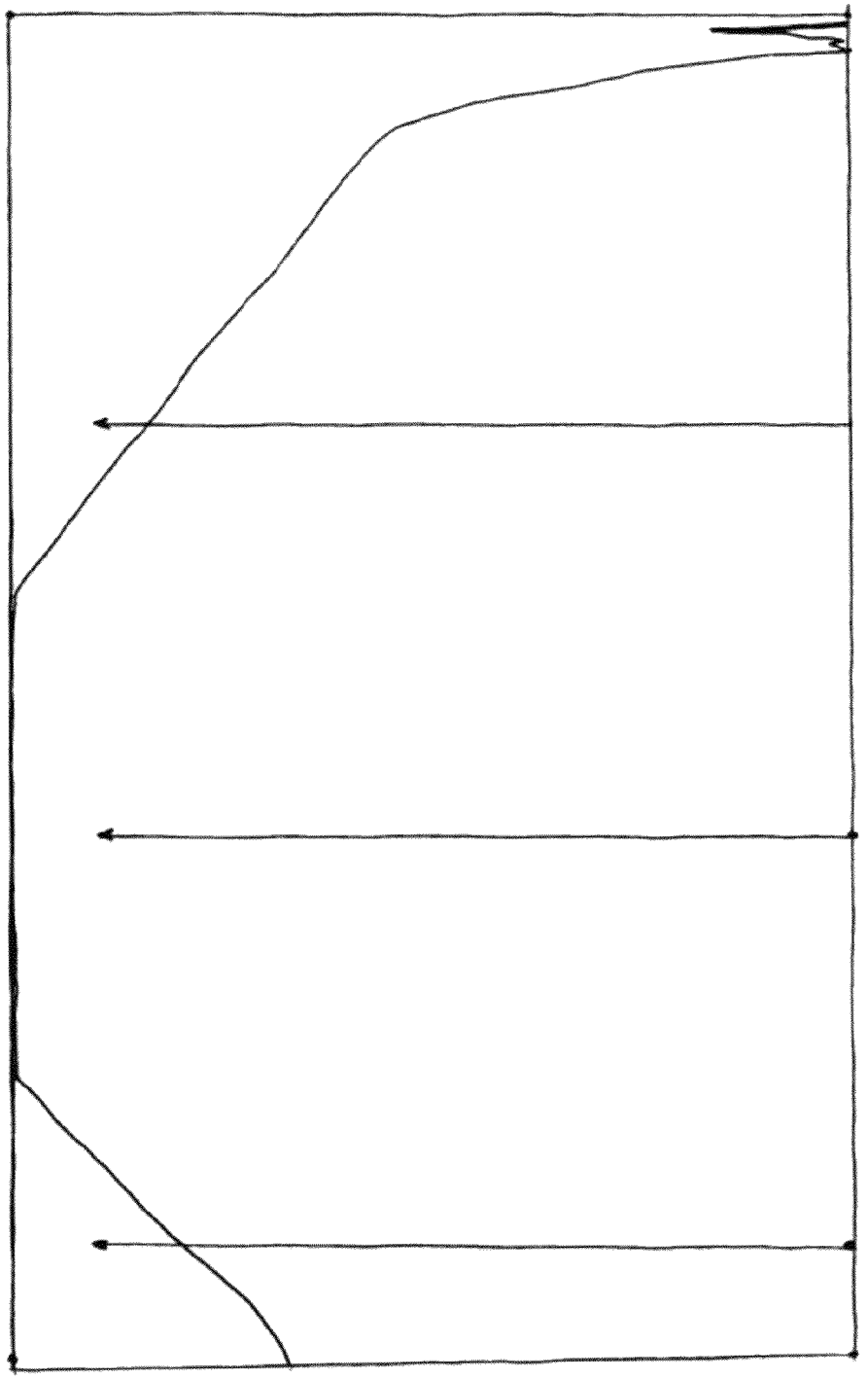

FIG. 51

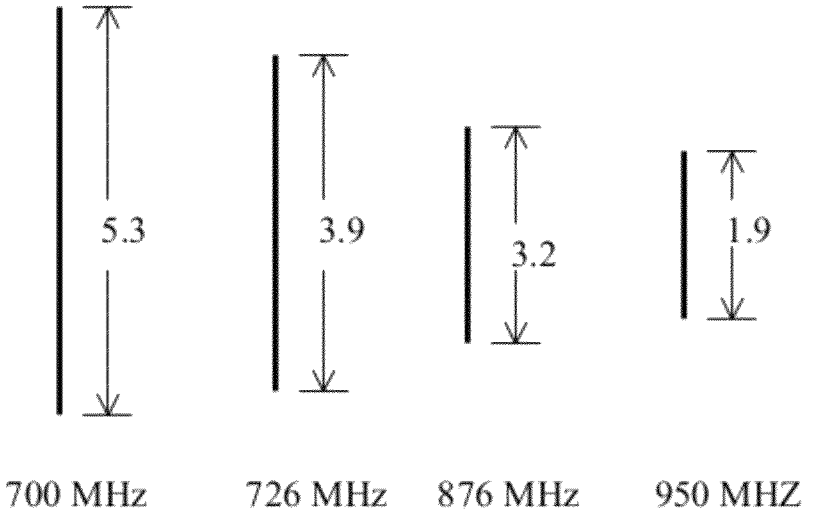

FIGURE 52

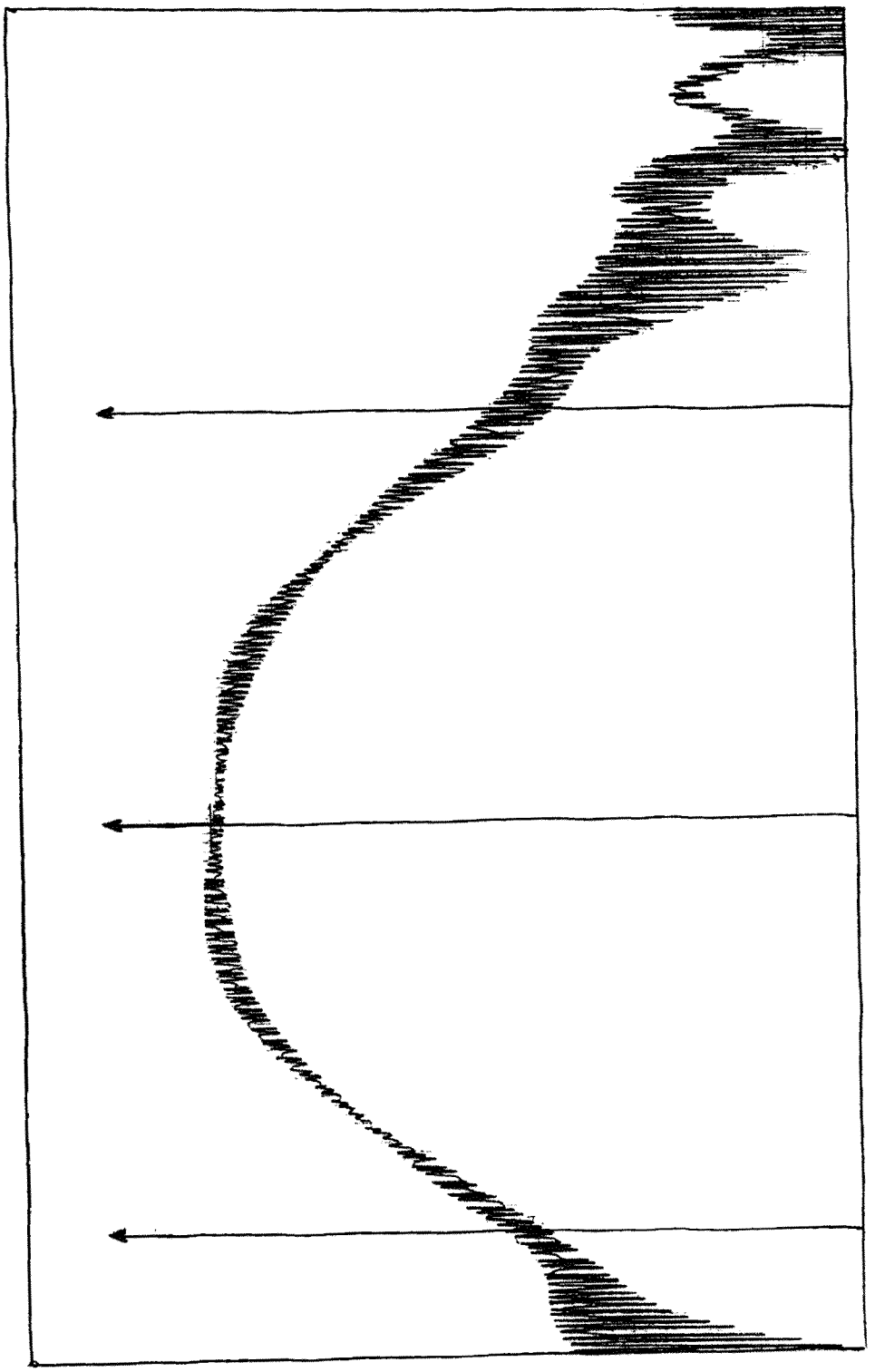

FIGURE 53

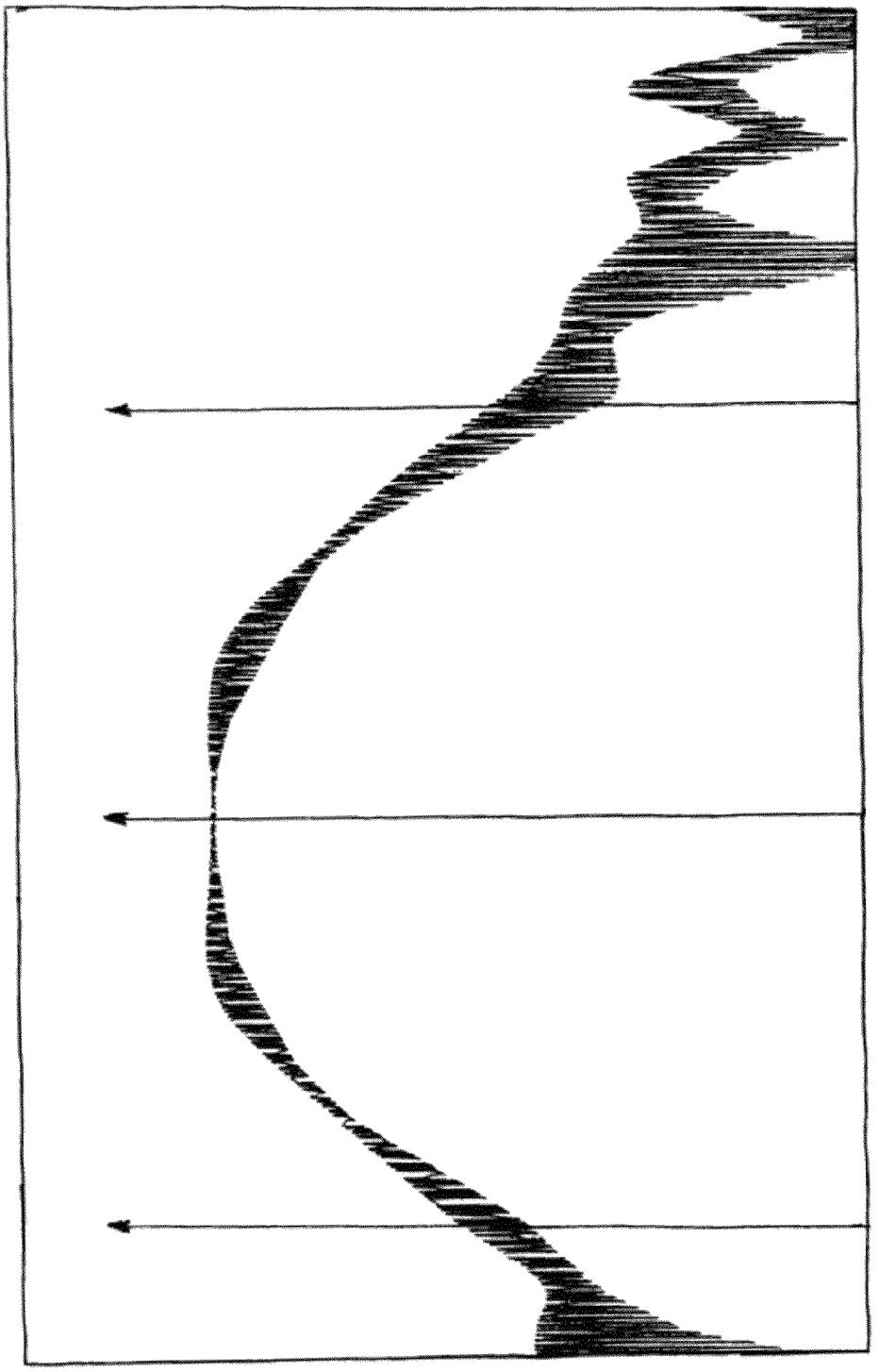

FIGURE 54

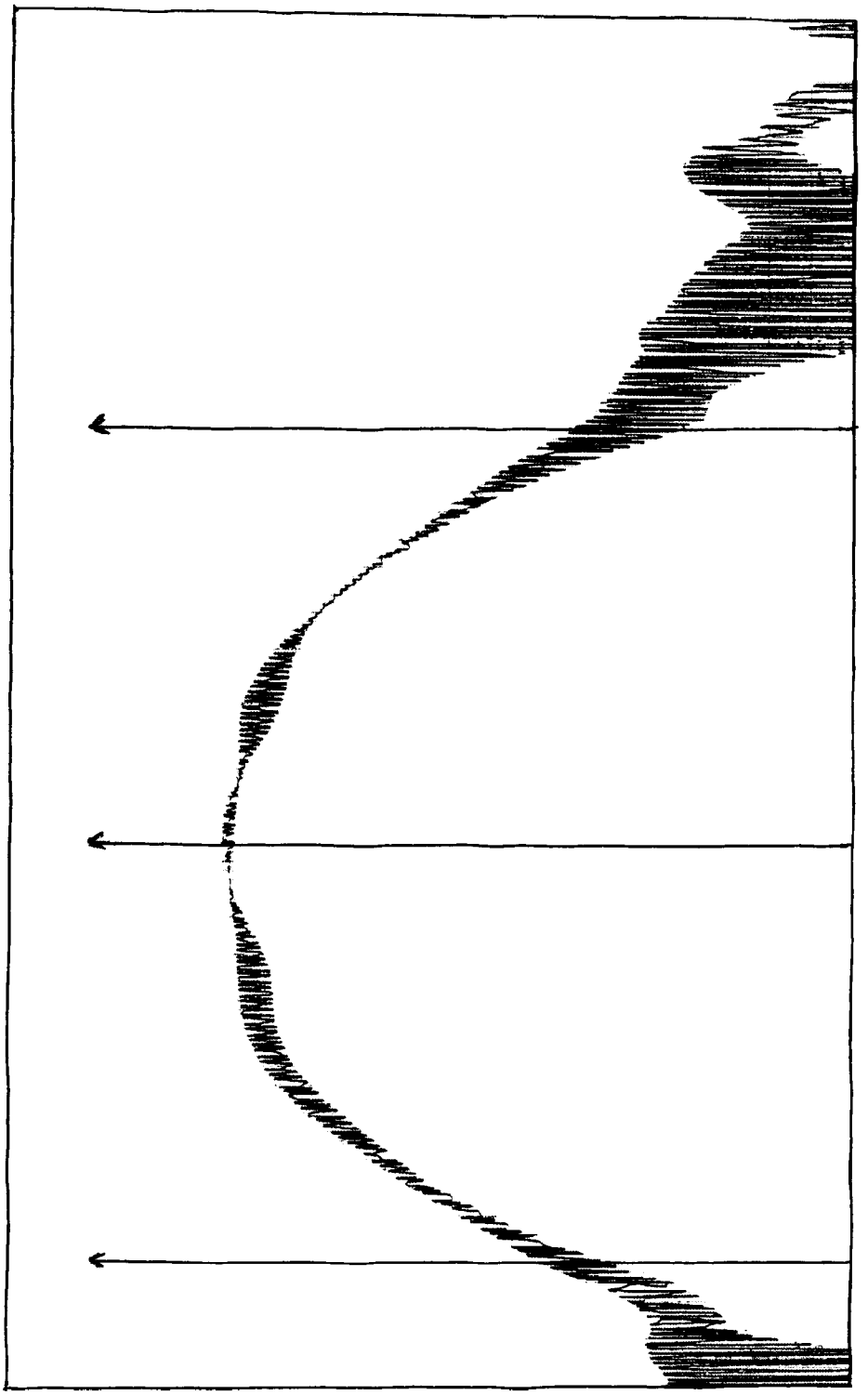

FIGURE 55

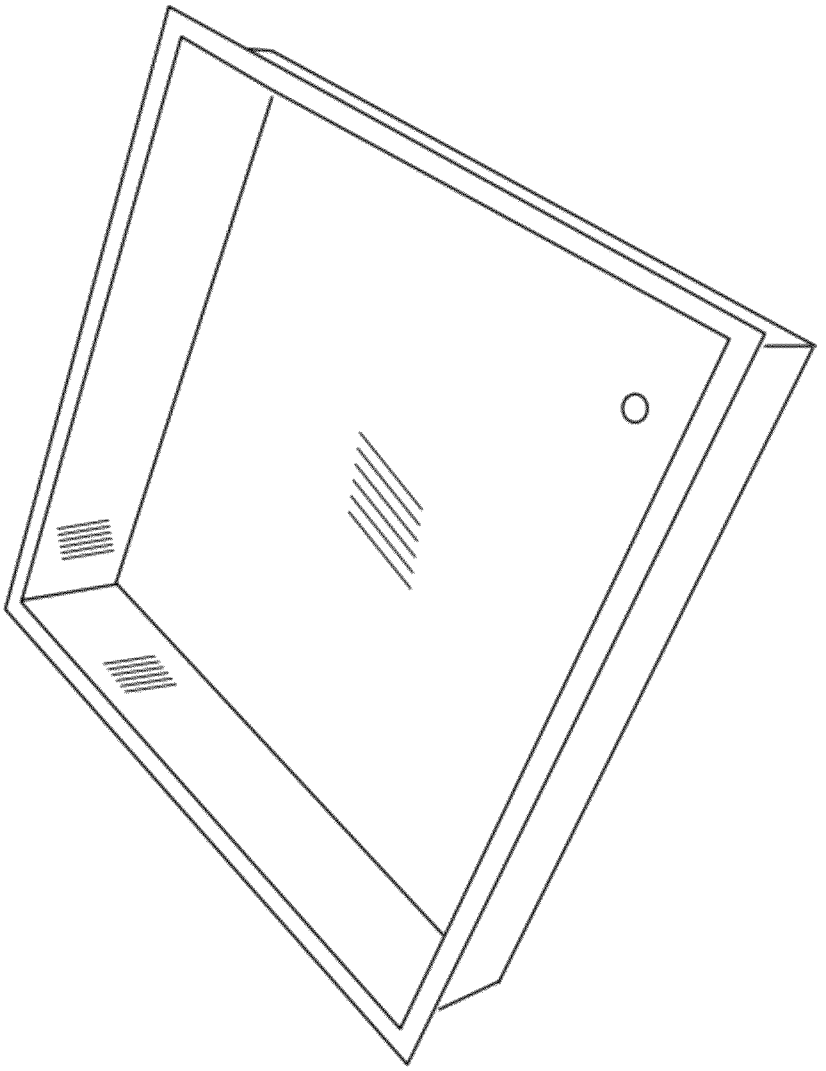

FIGURE 56

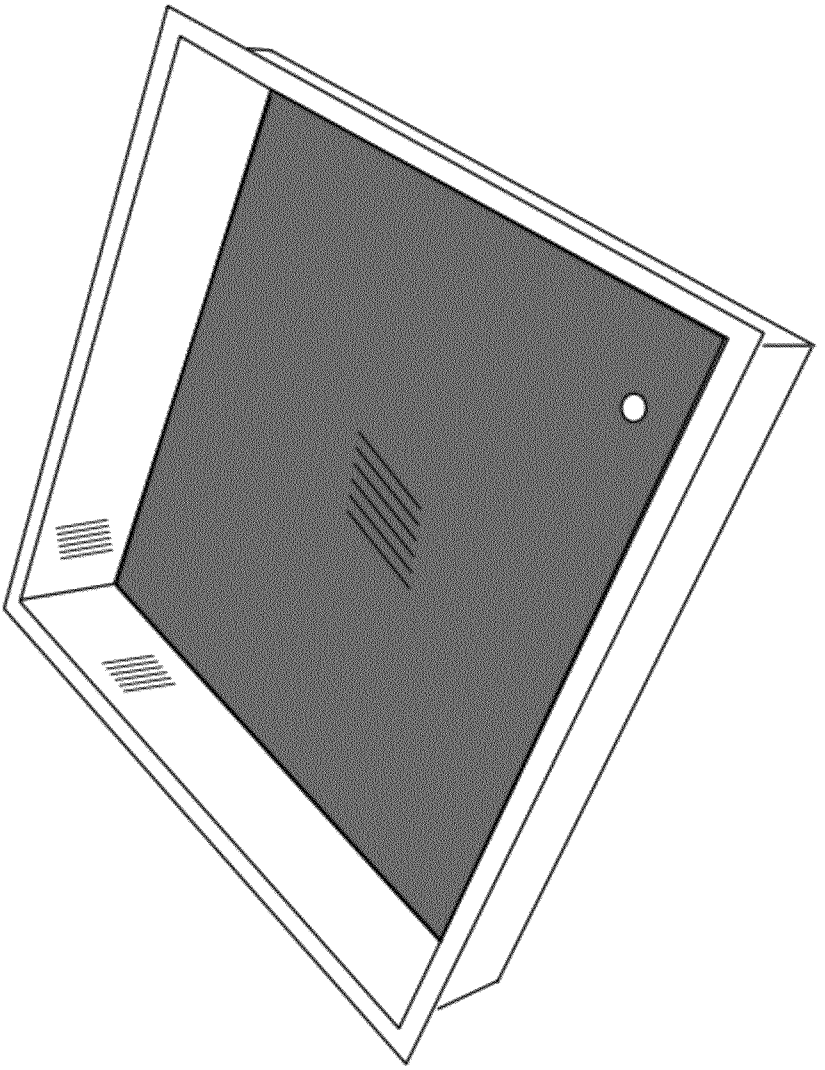

FIGURE 57

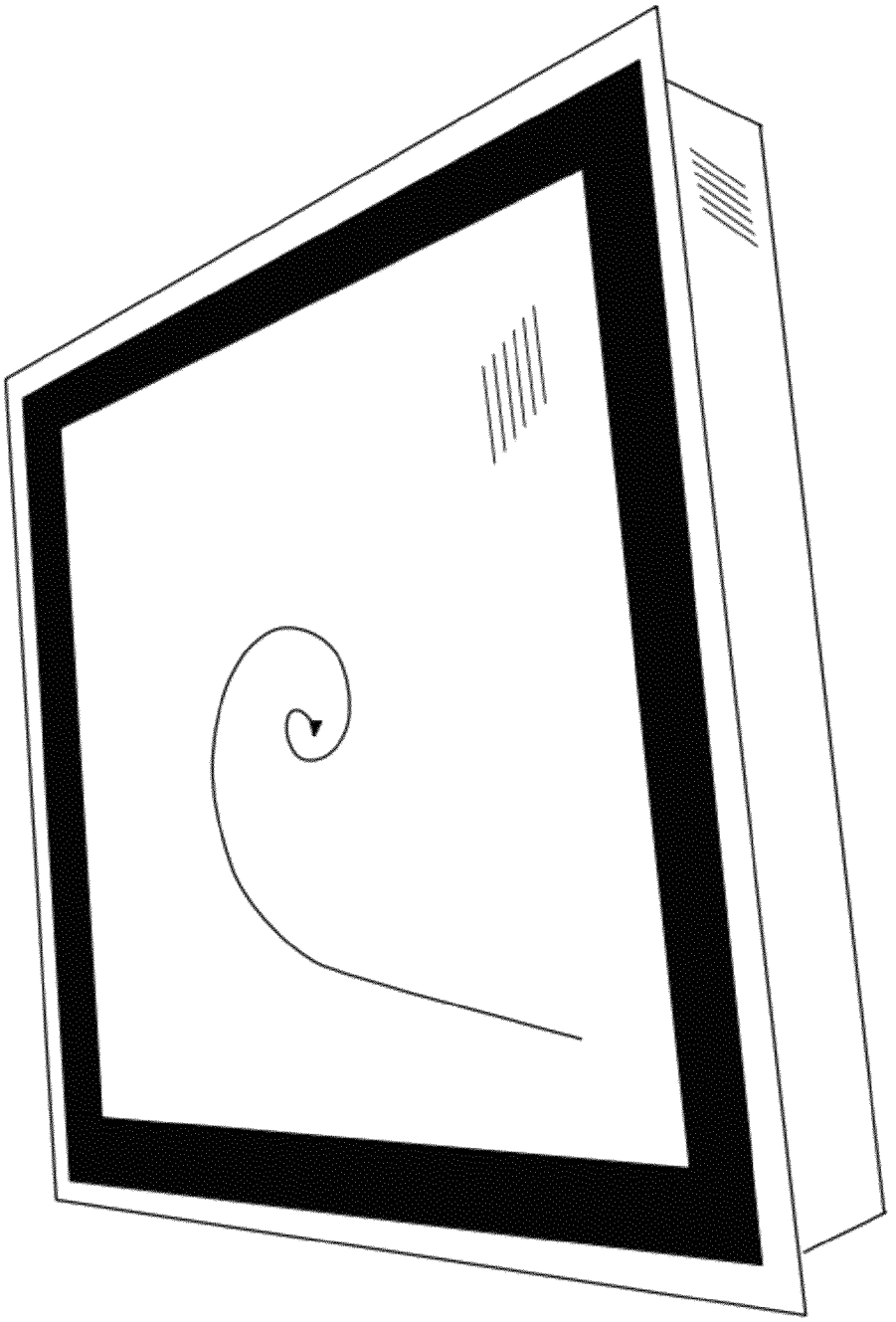

FIGURE 58

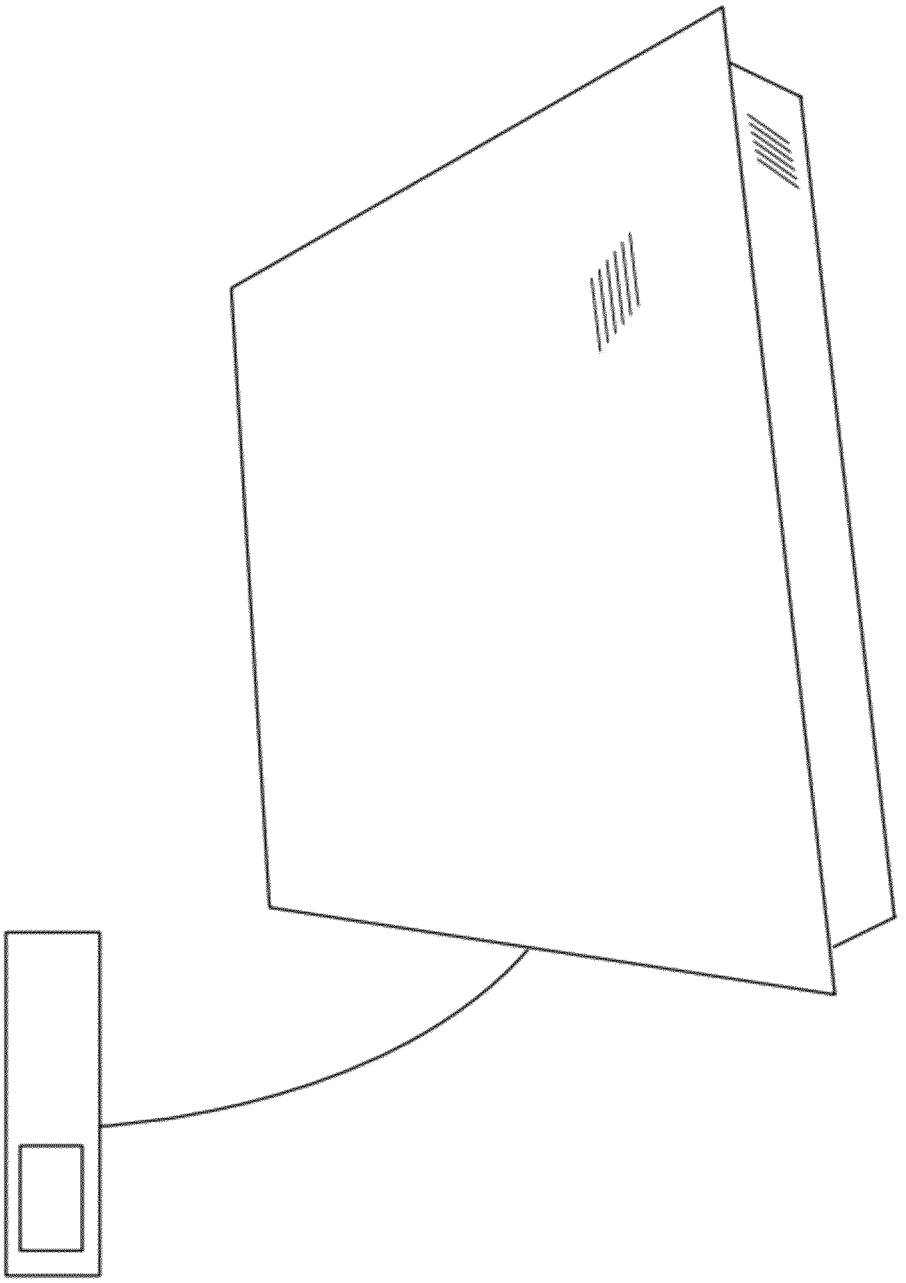

FIGURE 59

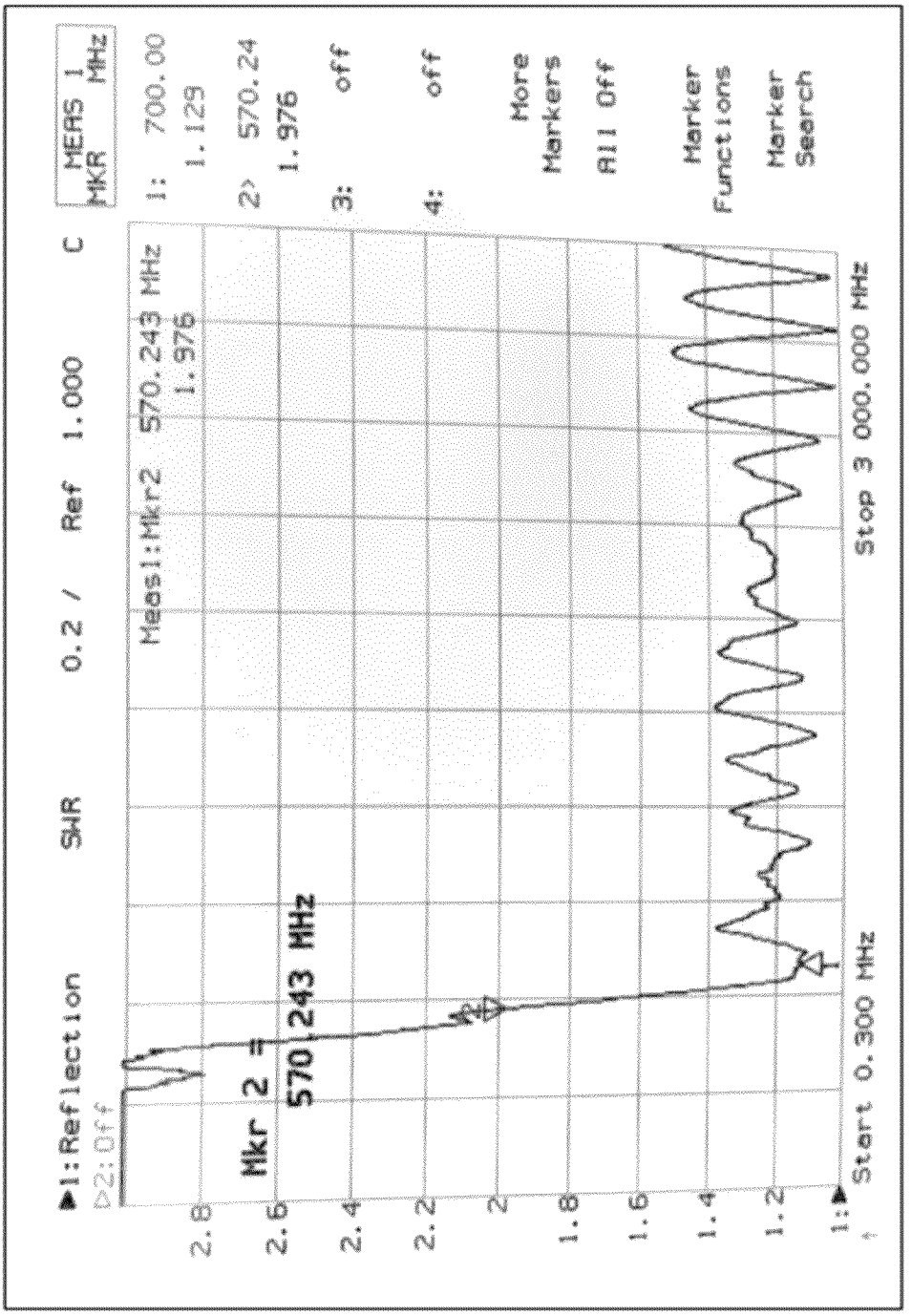
1:Reflection
SWR
0.2 /
Ref 1.000
C
MEAS 1
MKR MHz
Meas1:Mkr2 570.243 MHz
1.976
1: 700.00
1.129
2> 570.24
1.976
3: off
4: off
More
Markers
All Off
Marker
Functions
Marker
Search
Mkr 2 = 570.243 MHz
2.8
2.6
2.4
2.2
2
1.8
1.6
1.4
1.2
1:
Start 0.300 MHz
Stop 3 000.000 MHz

FIGURE 60

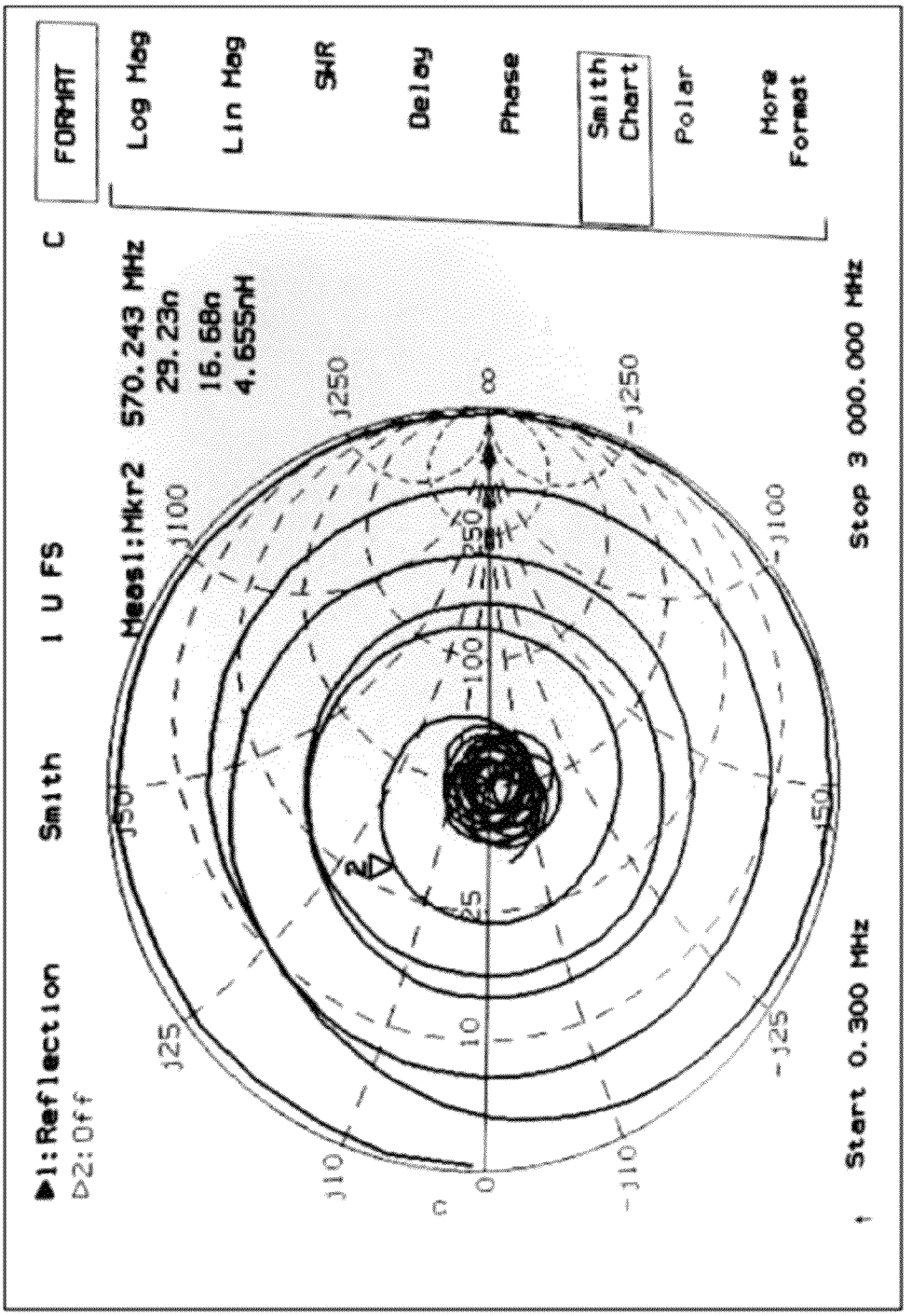
1: Reflection
2: Off
Smith
1 U FS
Meas1:Mkr2
570.243 MHz
29.23n
16.68n
4.655nH
C
FORMAT
Log Mag
Lin Mag
SWR
Delay
Phase
Smith Chart
Polar
Horz Format
Start 0.300 MHz
Stop 3 000.000 MHz

FIGURE 61

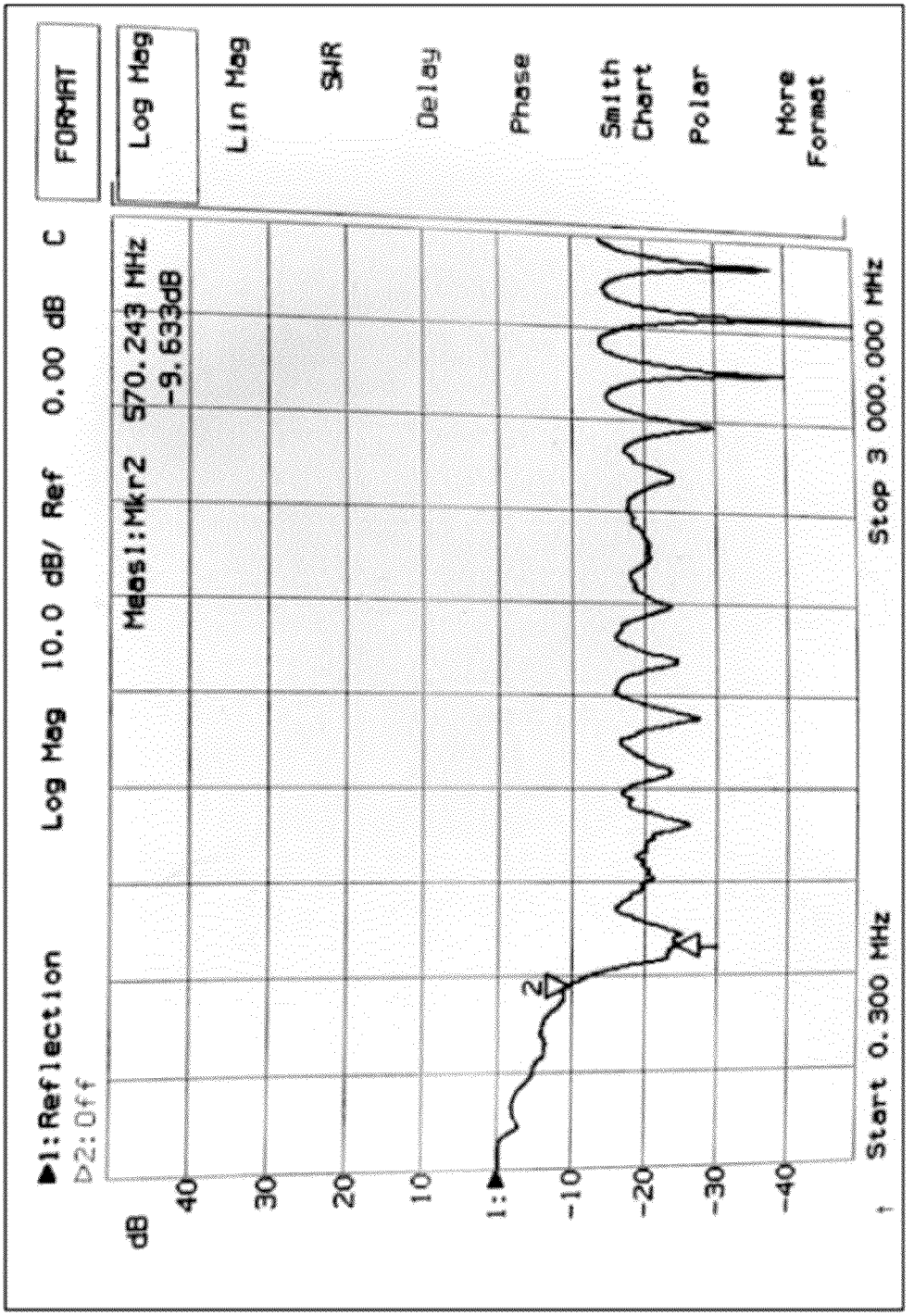
▶1: Reflection
D2: Off
Log Mag 10.0 dB/ Ref 0.00 dB C
Meas1:Mkr2 570.243 MHz
-9.633dB
FORMAT
Log Mag
Lin Mag
SWR
Delay
Phase
Smith Chart
Polar
More Format
dB
40
30
20
10
1:
-10
-20
-30
-40
Start 0.300 MHz
Stop 3 000.000 MHz

FIGURE 62

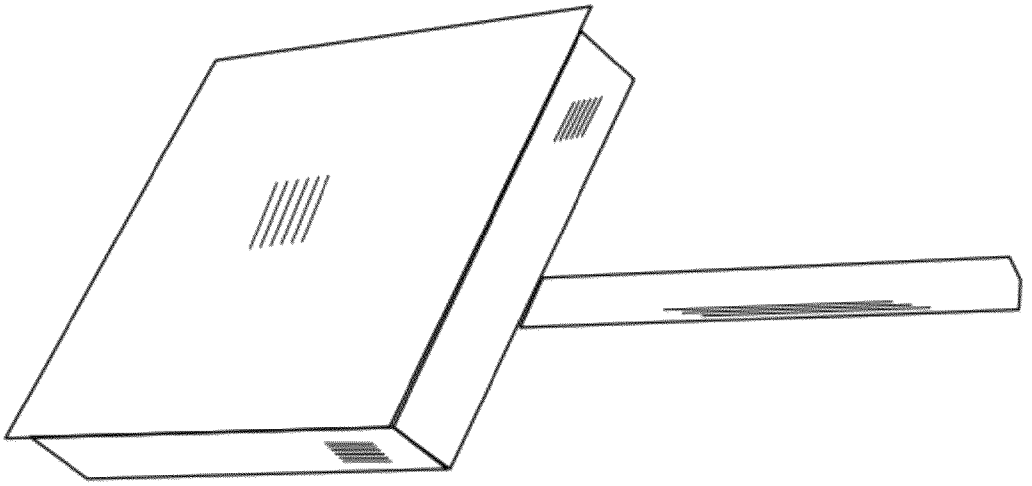

FIGURE 63

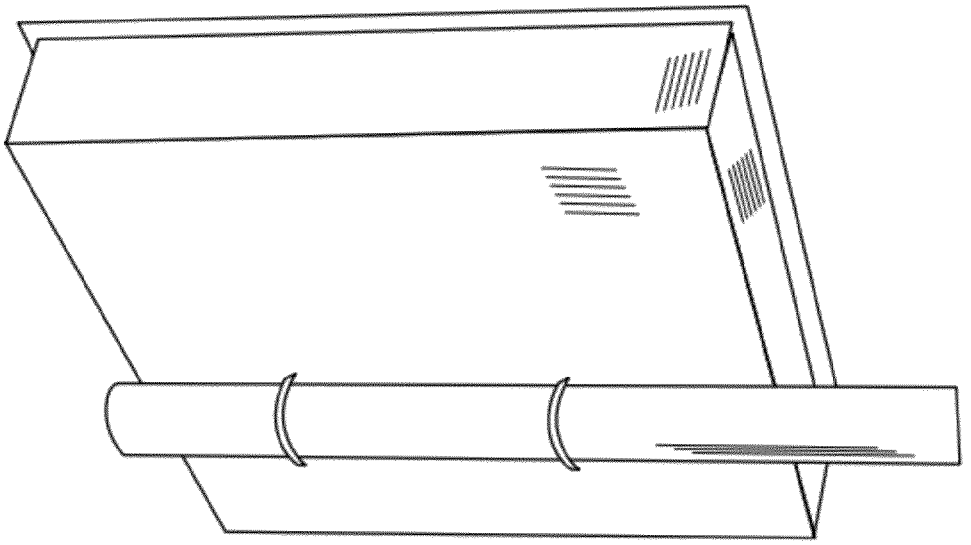

FIGURE 64

AntennaSys, Inc. Model No. ALS7025
Prototype No. 1

Frequency (MHz)	Gain (dBic)	HPBW (deg.)	On-Axis Axial Ratio (dB)	F/B (dB)	Estimated Directivity* (dBic)	Estimated Radiation Efficiency
700	-	80	5.3	34	8.1	-
776	4.0	80	3.9	24	8.1	39
874	5.1	80	3.2	41	8.1	50
950	4.1	83	1.9	30	7.8	43
1900	4.7	98	0.4	28	6.3	69
1982	4.8	100	0.2	34	6.2	72
2450	5.1	97	0.5	32	6.4	74

** NOTE: Directivity values shown are estimated as Do(dB)=10*log10(41,253/(HPBW^2)).*

FIGURE 65

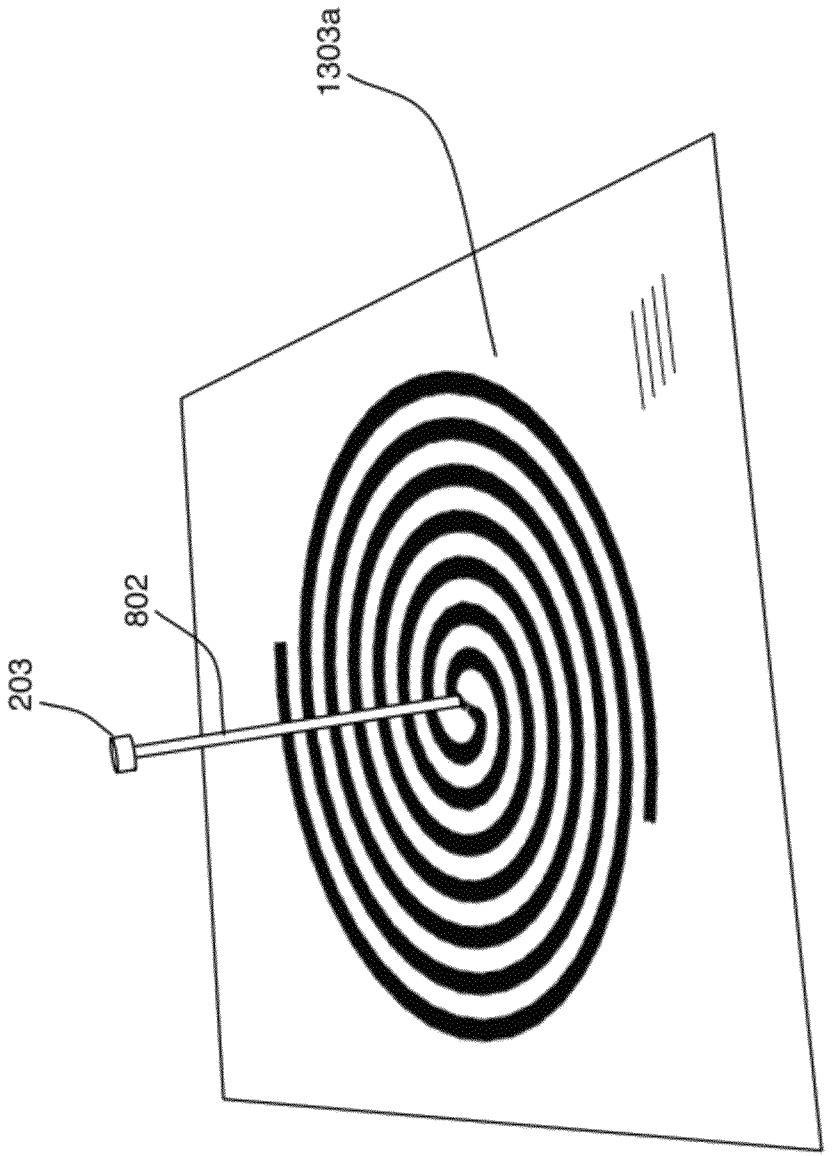

DIRECTIONAL PLANAR SPIRAL ANTENNA

This application is a continuation in part of U.S. Utility patent application Ser. No. 12/544,838 filed 20 Aug. 2009, now U.S. Pat. No. 8,193,997the specification of which is hereby incorporated herein by reference.

BACKGROUND OF THE INVENTION

1. Field of the Invention

One or more embodiments setting forth the ideas described throughout this disclosure pertain to the field of antennas. More particularly, but not by way of limitation, one or more aspects of the disclosure enable a directional planar spiral antenna, for example Archimedean spiral, square spiral, star spiral, log-spiral or any other type of spiral antenna which may also be configured as a spiral arm or spiral slot antenna.

2. Description of the Related Art

Some buildings are difficult to receive cell phone coverage in. In order to provide cell phone coverage in these buildings, "microcells" have been installed to accommodate cell phone calls within these buildings. Microcells are implemented as low power cell instances in a mobile phone network wherein the microcells have a correspondingly low coverage area with respect to a standard cell. Typical microcell range is under a mile in radius. Current implementations of microcells suffer from the types of antennas that are utilized. These microcells are generally omnidirectional antennas that allow access from locations external to the building in which they are installed.

Use of wide band antennas allows for the cell or microcell sites to handle more phone calls. Thus, wide band antennas are generally used for cell antennas. Walls in buildings begin to attenuate the cell phone signals at around 1.8 GHz and thus although coverage is limited above this frequency, the number of calls that may be handled is actually higher as individual floors within a building may simultaneously use the same frequency for separate phone calls.

Another approach to increase coverage within buildings uses bi-directional amplifiers (BDAs) to boost the cell phone coverage by receiving cell phone signals, amplifying them and retransmitting the signals, for example into/out of a building and from/to an existing cell tower for example. This solution may be cheaper and easier to implement than a full fledged microcell, and is expected to form a large portion of the market for increasing cell phone coverage for example within buildings. These installations utilize antennas within the building and an antenna generally on the outside of a building for example an externally directed antenna, e.g., pointed in the direction of the highest power cell tower within range.

For microcells and BDAs, it is desirable to primarily employ coverage within the building itself and not outside the building where the cell towers can handle traffic. With better antennas covering the inside of a building, fewer antennas are required as well.

One type of wide band antenna is a planar logarithmic-spiral antenna, also known as a planar log-spiral antenna. Log-spiral antennas have been known at least since 1955. Two-arm Log-spiral antennas generally have two spiral shaped arms shifted 180 degrees from one another. This type of antenna yields left hand circularly polarized radiation in one direction away from the plane, and right hand circularly polarized radiation in the opposite direction. Attempts at absorbing rearward pointing energy in order to make a directional antenna have been less than optimal in that known directional implementations still have sizable back lobes. This means that in the case of a BDA, the antenna pointing into the building would still have a fairly high gain pointing out of the building, which can cause problems with the externally directed antenna for example.

Since cell phones are generally linearly polarized, if wideband linearly polarized antennas are utilized within a building, then when a cell phone tips, i.e., the cell phone antenna is displaced out of a vertical orientation, for example when a cell phone user leans back in a chair, the signal fades. This is known as polarization fade. Circularly polarized antennas, for example coupled with a microcell or BDA, may receive the linearly polarized energy from the cell phone and do not experience this type of fade.

Another application for wideband antennas is for gathering signals for intelligence, i.e., "SIGINT". Wideband antennas for example are utilized in running continuous searches for signals or scanning known frequencies that may extend over a large range. In addition, in the intelligence world, one antenna can be utilized for many purposes. For covert communications, if a transmitter with a wide band antenna is captured for example, it is impossible to tell exactly what frequency the system was operating at. Also, if the antenna has a wide range of operation, e.g., 700 MHz-2500 MHz, there is no way to determine what the antenna was being used for.

For at least the limitations described above there is a need for a directional planar spiral antenna with low back lobes.

BRIEF SUMMARY OF THE INVENTION

At a high-level the disclosure set forth herein is directed to a directional planar spiral arm antenna or slot antenna. Embodiments of the invention enable a directional wide band antenna that may be utilized for example to enhance cell phone coverage within a building or for any other use such as signal intelligence, i.e., "SIGINT". As one skilled in the art will appreciate, enhancing cell phone coverage and the collection of signal intelligence may occur simultaneous for example.

One such embodiment includes a directional planar spiral antenna of any type including a log-spiral slot antenna having a feed-point configured to transfer energy to and from the spiral antenna along current paths as one skilled in the art will appreciate. The antenna may have an antenna impedance that in one or more embodiments is 150 Ohms. The embodiment further includes an energy absorbent backing and an energy absorbent siding coupled with the energy absorbent backing and further coupled with the log-spiral slot antenna. The embodiment further includes a cavity behind the log-spiral slot antenna and in front of the energy absorbent backing. The energy absorbent siding, cavity and energy absorbent backing greatly reduces back lobes. In one or more embodiments, the absorbent material is polyurethane impregnated with carbon with a net resistivity of 200-400 Ohms/Square.

The embodiment further includes a cable connector having an input impedance, wherein the cable connector for example may couple with a standard cable, such as a coaxial connector, e.g., a 50 Ohm coax. Spiral slot embodiments may further include a tapered microstrip line coupled to the feed-point and configured to transform the input impedance to the antenna impedance. The embodiment is housed in a container configured to hold the log-spiral slot antenna, the energy absorbent backing, the energy absorbent siding, the cavity, the cable connector and the tapered microstrip line. In one or more embodiments, the tapered microstrip acts as a Tapered Balun, converting the input impedance to the antenna feed-point impedance over a wide frequency range and converting

the unbalanced coaxial input to the balanced signal for the antenna feedpoint. In arm based embodiments, the impedance transformation and the balanced to unbalanced feedline conversion may be implemented on the normal centerline between the planar conductors of the antenna and the back of the container.

In one or more embodiments of the invention, the absorbent backing overlaps the outer portion of the slot to attenuate the reflected energy, for example at low frequencies. Embodiments of the invention enable great wideband impedance matching with Voltage Standing Wave Ratio (VSWR) below 1.2:1, for example.

BRIEF DESCRIPTION OF THE DRAWINGS

The above and other aspects, features and advantages of the ideas conveyed through this disclosure will be more apparent from the following more particular description thereof, presented in conjunction with the following drawings wherein:

FIG. **1** shows a side perspective view of an embodiment of the invention.

FIG. **2** shows a back perspective view of an embodiment of the invention.

FIG. **3** shows a front view of an embodiment of the invention.

FIG. **4** shows a top view of an embodiment of the invention.

FIG. **5** shows a side view of an embodiment of the invention.

FIG. **6** shows a back view of an embodiment of the invention.

FIG. **7** shows a cross section of FIG. **4** at section A.

FIG. **8** shows a cross section of FIG. **5** at section B.

FIG. **9** shows a side perspective view of an embodiment of the container.

FIG. **10** shows a front view of an embodiment of the container.

FIG. **11** shows a front view of an embodiment of the energy absorbent material.

FIG. **12** shows a front view of an embodiment of the energy absorbent material having a cavity.

FIG. **13** shows a front view of an embodiment of a PCB implementation wherein the PCB is transparent to allow viewing of the slots.

FIG. **14** shows a front view of an embodiment of a PCB implementation wherein the PCB is opaque and wherein the slots are shown as lines that represent the slots underneath the top layer of the PCB.

FIG. **15** shows a perspective view of the underside of the PCB board of FIG. **10**.

FIG. **16** shows a perspective view of the underside of the PCB board of FIG. **11**.

FIG. **17** shows a side view of the PCB board, mounting legs, mounting bracket, coaxial connector and gas vent.

FIG. **18** shows a three-dimensional radiation pattern for the forward pointing direction for an embodiment of the invention at 700 MHz.

FIG. **19** shows a three-dimensional radiation pattern for the rearward pointing direction for an embodiment of the invention at 700 MHz.

FIG. **20** shows a three-dimensional radiation pattern for the forward pointing direction for an embodiment of the invention at 1900 MHz.

FIG. **21** shows a three-dimensional radiation pattern for the rearward pointing direction for an embodiment of the invention at 1900 MHz.

FIG. **22** shows a three-dimensional radiation pattern for the forward pointing direction for an embodiment of the invention at 2450 MHz.

FIG. **23** shows a three-dimensional radiation pattern for the rearward pointing direction for an embodiment of the invention at 2450 MHz.

FIG. **24** shows a surface current plot for an embodiment of the invention at 700 MHz with for example the energy absorbent backing overlapping the outer portion of the slot, which greatly attenuates the reflected energy, for example at low frequencies.

FIG. **25** shows a power loss density plot for an embodiment of the invention at 700 MHz.

FIG. **26** shows a surface current plot for an embodiment of the invention at 800 MHz.

FIG. **27** shows a power loss density plot for an embodiment of the invention at 800 MHz.

FIG. **28** shows a surface current plot for an embodiment of the invention at 950 MHz.

FIG. **29** shows a power loss density plot for an embodiment of the invention at 950 MHz.

FIG. **30** shows a surface current plot for an embodiment of the invention at 1900 MHz.

FIG. **31** shows a power loss density plot for an embodiment of the invention at 1900 MHz.

FIG. **32** shows a surface current plot for an embodiment of the invention at 2450 MHz.

FIG. **33** shows a power loss density plot for an embodiment of the invention at 2450 MHz.

FIG. **34** shows a surface current plot for an embodiment of the invention at 3000 MHz.

FIG. **35** shows a power loss density plot for an embodiment of the invention at 3000 MHz.

FIG. **36** shows a plot of Half-Power Beamwidth (HPBW) versus frequency from simulation.

FIG. **37** shows a plot of Axial Ratio (AR) versus frequency from simulation.

FIG. **38** shows a plot of Front-to-Back Ratio (F/B) versus frequency from simulation.

FIG. **39** shows a plot of simulation-predicted boresite gain versus frequency from simulation.

FIG. **40** shows a plot of Voltage Standing Wave Ratio (VSWR) versus frequency from simulation.

FIG. **41** shows a Smith Chart of the input impedance of the antenna feedopint referred to 150 Ohms from simulation.

FIG. **42** shows a plot of 700 MHz RHCP Antenna Gain of the prototype versus azimuth, measured on an antenna range.

FIG. **43** shows a plot of 776 MHz RHCP Antenna Gain of the prototype versus azimuth, measured on an antenna range.

FIG. **44** shows a plot of 874 MHz RHCP Antenna Gain of the prototype versus azimuth, measured on an antenna range.

FIG. **45** shows a plot of 950 MHz RHCP Antenna Gain of the prototype versus azimuth, measured on an antenna range.

FIG. **46** shows a plot of 1900 MHz RHCP Antenna Gain of the prototype versus azimuth, measured on an antenna range.

FIG. **47** shows a plot of 1982 MHz RHCP Antenna Gain of the prototype versus azimuth, measured on an antenna range.

FIG. **48** shows a plot of 2450 MHz RHCP Antenna Gain of the prototype versus azimuth, measured on an antenna range.

FIG. **49** shows a plot of 700 MHz RHCP Antenna Gain of the prototype versus azimuth, measured on an antenna range, raised 10 dB relative to FIG. **42**.

FIG. **50** shows a plot of 874 MHz RHCP Antenna Gain of the prototype versus azimuth, measured on an antenna range, raised 10 dB relative to FIG. **44**.

FIG. **51** shows a plot of axial ratio on boresite at four frequencies, using the method of rotating linear source.

FIG. **52** shows a plot of 1900 MHz antenna gain using a rotating linear source versus azimuth for evaluation of axial ratio.

FIG. **53** shows a plot of 1982 MHz antenna gain using a rotating linear source versus azimuth for evaluation of axial ratio.

FIG. **54** shows a plot of 2450 MHz antenna gain using a rotating linear source versus azimuth for evaluation of axial ratio.

FIG. **55** shows a picture of an embodiment of the container.

FIG. **56** shows a picture of an embodiment of the energy absorbent backing coupled with the container.

FIG. **57** shows a picture of the PCB board and energy absorbent siding coupled with the container.

FIG. **58** shows a picture of an embodiment of the radome coupled to the container wherein the radome encloses the various parts within the container and wherein an embodiment of the invention is coupled to a vector network analyzer.

FIG. **59** shows a plot of Voltage Standing Wave Ratio (VSWR) versus frequency as measured on the prototype antenna using a vector network analyzer.

FIG. **60** shows a Smith Chart plot of the input impedance of the prototype antenna, referenced to 50 ohms.

FIG. **61** shows a plot of Return Loss measured at the connector of the prototype antenna, referenced to 50 ohms, measured using a vector network analyzer.

FIG. **62** shows an embodiment of the invention from below and to the side wherein the embodiment is mounted on a pole on an antenna range during the measurements described herein.

FIG. **63** shows an embodiment of the invention mounted on a pole from behind and to the side on an antenna range during the measurements described herein.

FIG. **64** shows actual antenna performance measured by an independent lab.

FIG. **65** shows another embodiment of a spiral antenna implemented as a spiral arm antenna also having current paths along the arms and centerline based impedance transformation.

DETAILED DESCRIPTION OF THE INVENTION

A directional planar spiral antenna will now be described. In the following exemplary description numerous specific details are set forth in order to provide a more thorough understanding of the ideas described throughout this specification. It will be apparent, however, to an artisan of ordinary skill that embodiments of ideas described herein may be practiced without incorporating all aspects of the specific details described herein. In other instances, specific aspects well known to those of ordinary skill in the art have not been described in detail so as not to obscure the disclosure. Readers should note that although examples of the innovative concepts are set forth throughout this disclosure, the claims, and the full scope of any equivalents, are what define the invention.

FIG. **1** shows a side perspective view of an embodiment of a directional planar log-spiral slot antenna **100**. Any type of spiral may be utilized. Covering the antenna is radome **101**, that in one or more embodiments is riveted to container **102**. Container **102** may be mounted using mounting U bolts **103** and **104** for example. Radome **101** may be constructed of any material that minimally attenuates electromagnetic radiation of the frequencies desired for operation of directional planar log-spiral slot antenna **100**, and may be implemented as a weatherproof element that prevents water or dust from entering the internal volume enclosed by radome **101** and container **102** for example. One embodiment of the invention utilizes a 17" square fiberglass cover for radome **101**, while container **102** is implemented with a 15.9" square aluminum box, 3.2" deep. U-bolts **103** and **104** may be any size, for example 2.375" radius bolts. One skilled in the art will recognize that these dimensions are not to be taken as the only dimensions that embodiments of the invention can be implemented with.

FIG. **2** shows a back perspective view of an embodiment of the invention. Mounting U bolts **103** and **104** couple to container **102** via mounting bracket **201** for example. Any other method of mounting directional planar log-spiral slot antenna **100** is in keeping with the spirit of the invention. Also shown is gas vent **202** that allows for atmospheric pressure compensation. One or more embodiments of gas vent **202** do not allow moisture to enter the volume enclosed by container **102** and radome **101** for example. One or more embodiments of gas vent **202** may utilize a filter that allows gas to enter or exit the internal volume, while keeping moisture or other objects from entering the volume within the container. Cable connector **203** may comprise any type of cable connector, for example a 50 Ohm N-type coaxial cable connector. Any type of connector may be utilized for cable connector **203** depending on the intended application as desired.

FIG. **3** shows a front view of an embodiment of the invention. Shown coupling radome **101** to the container are rivets **301-303**. Any number of rivets or other connection devices may be utilized to couple radome **101** to the container.

FIG. **4** shows a top view of an embodiment of the invention. Container **102** may be constructed from any conductive material durable enough for the intended installation location. One or more embodiments may be constructed from aluminum or any durable plastic having embedded conductive properties for example. Indentation **401** on mounting bracket **201** allows for a mounting pole for example to interface with mounting U bolts **103** and **104** and keep container **102** vertically oriented. Indentation **401** is optional and could be of any geometric shape that is able to interface with the desired mount. Cross section A looking into a cutaway of container **102** is shown in FIG. **8** below.

FIG. **5** shows a side view of an embodiment of the invention. Mounting nuts **501** and **502** are shown coupling mounting bracket **201** with mounting U bolts **103** and **104** respectively. By tightening mounting nuts, the U bolts are drawn closer to mounting bracket **201** and fix container **102** to any desired mount.

FIG. **6** shows a back view of an embodiment of the invention. Cross-section B looking into a cutaway of container **102** is shown in FIG. **8** below.

FIG. **7** shows a perspective view of cross section of FIG. **4** at section A. Antenna **701** is shown as mounted as part of a printed circuit board (PCB). Directly beneath antenna **701** is cavity **702** that is bounded on the sides by energy absorbent siding **704** and below by energy absorbent backing **703**. Also shown is gas passage **605** that allows gas entering or exiting from gas vent **202** to enter cavity **702** and otherwise equalize pressure within the volume bounded by radome **101** and container **102**. Gas vent **102** may be implemented in one or more embodiments with a sintered material for example with small pores that allows gas to transfer into and out of the device without allowing liquid to transfer.

FIG. **8** shows a cross section of FIG. **5** at section B. Support **801** couples antenna **701**, for example as implemented on a PCB, to container **102** through energy absorbent siding **704**. In addition, cable connector **203** mounts on container **102** and provides coaxial cable **802** to coaxial terminal **803** via coaxial

cavity **805**. Optionally, ferrite beads may be placed on coaxial cable **802** to prevent RF signals from traveling down the coaxial cable.

FIG. **9** shows a side perspective view of an embodiment of the container. Shown are cable connector hole **904** for mounting cable connector **203**, and mount points **901**, **902** and **903** (and vertically offset mount points not numbered for brevity) that allow mounting bracket **201** to be mounted at a translated offset to container **102**.

FIG. **10** shows a front view of an embodiment of the container. Connection holes **1001**, **1002** and **1003** are shown, for example to couple radome **101** to container **102**. Rivets for example may be utilized in one or more embodiments although bolts, or any other connection apparatus may also be utilized in keeping with the spirit of the invention.

FIG. **11** shows a front view of an embodiment of the energy absorbent material. Energy absorbent backing **703** is shown with holes configured to accommodate mount points, supports and coaxial connector. For example, holes **1101**, **1102** and **1103** allow for supports (such as support **801**) to traverse through energy absorbent backing **703**. Holes **1111**, **1112** and **1113** allow corresponding mount points **901**, **902** and **903** for example to intrude into container **102**. Hole **1104** creates coaxial cavity **805** and allows for coaxial cable **802** to traverse from coaxial connector **203** to coaxial terminal **803**.

FIG. **12** shows a front view of an embodiment of the energy absorbent material having cavity **1201** that is situated directly behind antenna **701**. In one or more embodiments of the invention, the diameter of cavity **1201** is 9.69" and the depth is 1.5", while the absorbent siding is 1.2" thick between the container and the PCB board, while the log-spiral slots overlap by 0.3".

FIG. **13** shows a front view of an embodiment of a PCB implementation wherein the PCB is transparent to allow viewing of the slots in antenna **701**. As shown, coaxial terminal **803** couples with tapered microstrip line **1301** that couples to feed-point **1302** at the center of antenna **701**. In one or more embodiments tapered microstrip line **1301** acts as a wideband impedance transformer that transforms for example, a 50 Ohm input impedance to a 150 Ohm antenna impedance over a wide range of frequencies. Slots **1303** in antenna **701** are of the log-spiral shape, and allow for a wideband radiation pattern as will be shown in later figures. One embodiment of the invention may be implemented with a 0.05" gap at the feed-point, wherein the shield of the tapered microstrip line **1301** connects to the conductor on one side of the gap and wherein the main conductor of the tapered microstrip line **1302** connects to the conductor portion across the gap, therein creating a balanced line. The tapered microstrip line **1301** can be formed into the PCB in one or more embodiments of the invention. In one or more embodiments of the invention, tapered microstrip line **1301** tapers down to 0.004" at the feed-point from 0.054" at coaxial terminal **803**. In one or more embodiments, the PCB material may be implemented with Rogers 4003C, having a dielectric thickness of 0.032 inches and clad on both sides with copper approximately 0.0015 inches thick. Any other type of PCB material may be utilized in keeping with the spirit of the invention.

Specifically, the shape of embodiments of the log-spiral antenna enabled herein are based on the logarithmic spiral curve defined by:

$$Q=k^{*}\exp(b\phi)$$

where Q is the radial distance in inches from the origin in the direction given by the angle ϕ, b=0.3 and k=0.2867 for an embodiment of the invention as shown in at least FIG. **13** for example. As one skilled in the art will recognize, these parameters may be adjusted in keeping with the spirit of the invention to modify the performance of the antenna as desired, and thus is not meant to be a limiting exact range for all embodiments.

By utilizing another log-spiral with a second angle that differs from ϕ, a log-spiral arm or slot may be defined that is cut from a metal sheet for example. Terminating the spirals with a circular arc is typically performed. In this embodiment as shown in at least FIG. **13**, the radius of the terminating circular arc is 4.845 inches, which again, may be adjusted to adjust the performance of the antenna as desired as one skilled in the art will appreciate, and thus is not meant to be a limiting exact range for all embodiments. Rotating the curves by 180 degrees and cutting a second slot results in a balanced log-spiral slot antenna as utilized in one or more of the embodiments enabled herein.

FIG. **14** shows a front view of an embodiment of a PCB implementation wherein the PCB is opaque, thus showing only tapered microstrip line **1301** and feed-point **1302**, while hiding the slots in antenna **701** for example.

FIG. **15** shows a perspective view of the underside of the PCB board of FIG. **10**. Rivets **301**, slot **1303**, coaxial terminal **803**, coaxial cable **802** and cable connector **203** along with supports **801**, **1501** and **1502** from the underside in their final configuration positions. The copper ground plane from which slots **1303** are cut, also has the copper removed where supports **801**, **1501** and **1502** couple to the PCB so that the copper ground plane is not electrically coupled to supports **801**, **1501** and **1502**. In one or more embodiments the slots may be replaced with conductive arms, i.e., slots **1303** become conductive arms (see arms **1303***a* in FIG. **65** for example) wherein the copper ground plane is replaced with a non-conductive planar element, for example plastic or epoxy based or any other non-conductive material. In this arm-based embodiment, cable connect **203**, coaxial cable **802** and any terminals for example may be moved to the center of the antenna.

FIG. **16** shows a perspective view of the underside of the PCB board of FIG. **11** wherein the PCB is translucent and allows slots **1303** to be visible as outlines.

FIG. **17** shows a side view of the PCB board, mounting legs, mounting bracket, coaxial connector and gas vent without container **102**.

FIG. **18** shows a three-dimensional radiation pattern for the forward pointing direction for an embodiment of the invention at 700 MHz.

FIG. **19** shows a three-dimensional radiation pattern for the rearward pointing direction for an embodiment of the invention at 700 MHz.

FIG. **20** shows a three-dimensional radiation pattern for the forward pointing direction for an embodiment of the invention at 1900 MHz.

FIG. **21** shows a three-dimensional radiation pattern for the rearward pointing direction for an embodiment of the invention at 1900 MHz.

FIG. **22** shows a three-dimensional radiation pattern for the forward pointing direction for an embodiment of the invention at 2450 MHz.

FIG. **23** shows a three-dimensional radiation pattern for the rearward pointing direction for an embodiment of the invention at 2450 MHz.

FIG. **24** shows a surface current plot for an embodiment of the invention at 700 MHz with for example the energy absorbent siding overlapping the outer portion of the slot, which greatly attenuates the reflected energy, for example at low frequencies.

FIG. **25** shows a power loss density plot for an embodiment of the invention at 700 MHz. The energy absorbed at the end of the slots shows that the overlap of the absorbent backing acts as an impedance matching component which absorbs energy which is not radiated between the feed-point of the antenna and the end of the slot, as can be seen in the chart in FIG. **40**. This allows for excellent impedance matching, and stated another way, minimizes the reflected energy back from the end of the slots at above 700 MHz. See also the description of FIG. **35**.

FIG. **26** shows a surface current plot for an embodiment of the invention at 800 MHz.

FIG. **27** shows a power loss density plot for an embodiment of the invention at 800 MHz.

FIG. **28** shows a surface current plot for an embodiment of the invention at 950 MHz.

FIG. **29** shows a power loss density plot for an embodiment of the invention at 950 MHz.

FIG. **30** shows a surface current plot for an embodiment of the invention at 1900 MHz.

FIG. **31** shows a power loss density plot for an embodiment of the invention at 1900 MHz.

FIG. **32** shows a surface current plot for an embodiment of the invention at 2450 MHz.

FIG. **33** shows a power loss density plot for an embodiment of the invention at 2450 MHz.

FIG. **34** shows a surface current plot for an embodiment of the invention at 3000 MHz.

FIG. **35** shows a power loss density plot for an embodiment of the invention at 3000 MHz. The change of scale of the power loss density with respect to FIG. **25** shows that energy is still absorbed at the end of the slots albeit at a lower level, however, FIG. **35** further shows another important feature of the invention in that the absorbent siding also absorbs any current that flows to the edge of the PCB, and this allows one or more embodiments of the invention to have a very high F/B or front to back ratio. This is due to the fact that no currents can reach the container and wrap around to the back of the antenna and radiate in the reverse direction.

FIG. **36** shows a plot of Half-Power Beamwidth (HPBW) versus frequency from simulation.

FIG. **37** shows a plot of Axial Ratio (AR) versus frequency from simulation.

FIG. **38** shows a plot of Front-to-Back Ratio (F/B) versus frequency from simulation.

FIG. **39** shows a plot of simulation-predicted boresite gain versus frequency from simulation.

FIG. **40** shows a plot of Voltage Standing Wave Ratio (VSWR) versus frequency from simulation.

FIG. **41** shows a Smith Chart of the input impedance of the antenna feed-point referred to 150 Ohms from simulation.

FIG. **42** shows a plot of 700 MHz RHCP Antenna Gain of the prototype versus azimuth, measured on an antenna range.

FIG. **43** shows a plot of 776 MHz RHCP Antenna Gain of the prototype versus azimuth, measured on an antenna range.

FIG. **44** shows a plot of 874 MHz RHCP Antenna Gain of the prototype versus azimuth, measured on an antenna range.

FIG. **45** shows a plot of 950 MHz RHCP Antenna Gain of the prototype versus azimuth, measured on an antenna range.

FIG. **46** shows a plot of 1900 MHz RHCP Antenna Gain of the prototype versus azimuth, measured on an antenna range.

FIG. **47** shows a plot of 1982 MHz RHCP Antenna Gain of the prototype versus azimuth, measured on an antenna range.

FIG. **48** shows a plot of 2450 MHz RHCP Antenna Gain of the prototype versus azimuth, measured on an antenna range.

FIG. **49** shows a plot of 700 MHz RHCP Antenna Gain of the prototype versus azimuth, measured on an antenna range, raised 10 dB relative to FIG. **42**.

FIG. **50** shows a plot of 874 MHz RHCP Antenna Gain of the prototype versus azimuth, measured on an antenna range, raised 10 dB relative to FIG. **44**.

FIG. **51** shows a plot of axial ratio on boresite at four frequencies, using the method of rotating linear source.

FIG. **52** shows a plot of 1900 MHz antenna gain using a rotating linear source versus azimuth for evaluation of axial ratio.

FIG. **53** shows a plot of 1982 MHz antenna gain using a rotating linear source versus azimuth for evaluation of axial ratio.

FIG. **54** shows a plot of 2450 MHz antenna gain using a rotating linear source versus azimuth for evaluation of axial ratio.

FIG. **55** shows an embodiment of the container. Embodiments of the invention may utilize ferrite beads as shown on the coaxial cable **802**.

FIG. **56** shows an embodiment of the energy absorbent backing coupled with the container.

FIG. **57** shows the PCB board and energy absorbent siding coupled with the container.

FIG. **58** shows an embodiment of the radome coupled to the container wherein the radome encloses the various parts within the container and wherein an embodiment of the invention is coupled to a vector network analyzer.

FIG. **59** shows a plot of Voltage Standing Wave Ratio (VSWR) versus frequency as measured on the prototype antenna using a vector network analyzer.

FIG. **60** shows a Smith Chart plot of the input impedance of the prototype antenna, referenced to 50 ohms.

FIG. **61** shows a plot of Return Loss measured at the connector of the prototype antenna, referenced to 50 ohms, measured using a vector network analyzer.

FIG. **62** shows an embodiment of the invention from below and to the side wherein the embodiment is mounted on a pole on an antenna range during the measurements described herein.

FIG. **63** shows an embodiment of the invention mounted on a pole from behind and to the side on an antenna range during the measurements described herein.

FIG. **64** shows actual antenna performance measured by an independent lab. The F/B or Front over Back ratio shows a worst case of 24 dB and a 30 dB F/B ratio at 950 MHz. The On-Axis Axial Ratio corresponds to that predicted in FIG. **37**. The quantities measured relate to an embodiment of the invention for example, as implemented as shown in FIGS. **55-63**.

FIG. **65** shows the underside of the plane having the spiral arm antenna wherein current paths are along the arms (as opposed to the edges of the slots in slot based embodiments). Also shown is centerline based impedance transformation. Arms **1303***a* are conductive wherein the plan in which the arms reside is non-conductive planar element, for example plastic or epoxy based or any other non-conductive material. In this arm-based embodiment, cable connect **203**, coaxial cable **802** and any terminals for example may be located in the centerline of the antenna as shown.

While the ideas herein disclosed has been described by means of specific embodiments and applications thereof, numerous modifications and variations could be made thereto by those skilled in the art without departing from the scope of the invention set forth in the claims.

What is claimed is:

1. A directional planar spiral antenna comprising:

a spiral antenna comprising

a feed-point configured to transfer energy to and from said spiral antenna,

spiral shaped current paths,

an antenna impedance;

an energy absorbent backing;

an energy absorbent siding coupled with said energy absorbent backing and further coupled with said spiral antenna;

a cavity behind said spiral antenna and in front of a portion of said energy absorbent backing;

a cable connector having an input impedance wherein said cable connector is coupled to the feed-point;

a container configured to hold said spiral antenna, said energy absorbent backing, said energy absorbent siding, said cavity, said cable connector; and,

wherein said energy absorbent siding is located between edges of the spiral antenna and edges of the container and is also positioned underneath the spiral antenna and wherein said spiral shaped current paths at an outer portion of said spiral antenna overlap at least a portion of said energy absorbent siding.

2. The directional planar spiral antenna of claim 1 wherein said spiral antenna comprises slots wherein said spiral shaped current paths flow along said slots.

3. The directional planar spiral antenna of claim 1 wherein said spiral antenna comprises arms wherein said spiral shaped current paths flow along said arms.

4. The directional planar spiral antenna of claim 1 further comprising:

a transformer coupled between the cable connector and the feed-point and configured to transform the input impedance to the antenna impedance.

5. The directional planar spiral antenna of claim 1 further comprising:

a tapered microstrip line coupled between the cable connector and the feed-point and configured to transform the input impedance to the antenna impedance and provide a balanced output.

6. The directional planar spiral antenna of claim 5 wherein said spiral antenna further comprises planar conductors, wherein the tapered microstrip is further configured to convert said input impedance from an unbalanced input to a balanced antenna feed-point feedline to provide said balanced output, and wherein the impedance transformation and the unbalanced to balanced feedline conversion take place on a normal centerline between the planar conductors of the antenna and a back of the container.

7. The directional planar spiral antenna of claim 1 wherein said feed-point overlaps said cavity.

8. The directional planar spiral antenna of claim 1 wherein said spiral antenna is coupled with a printed circuit board.

9. The directional planar spiral antenna of claim 1 wherein said energy absorbent backing and said energy absorbent siding are constructed from polyurethane impregnated with carbon.

10. The directional planar spiral antenna of claim 1 wherein said energy absorbent backing and said energy absorbent siding have a net resistivity that is greater than zero Ohms/Square.

11. The directional planar spiral antenna of claim 1 wherein said energy absorbent backing and said energy absorbent siding have a net resistivity of 200 to 400 Ohms/Square.

12. The directional planar spiral antenna of claim 1 wherein said container is conductive and further comprising a radome coupled with said container.

13. The directional planar spiral antenna of claim 1 wherein said container further comprises a gas vent that is optionally configured to block moisture from entering said container.

14. The directional planar spiral antenna of claim 1 configured to enhance cell phone coverage.

15. The directional planar spiral antenna of claim 1 configured to collect signals intelligence.

16. The directional planar spiral antenna of claim 1 configured to enhance cell phone coverage and configured to collect signals intelligence simultaneously.

17. A directional planar spiral antenna comprising:

a spiral antenna comprising

a feed-point configured to transfer energy to and from said spiral antenna,

spiral shaped current paths,

an antenna impedance;

an energy absorbent backing;

an energy absorbent siding coupled with said energy absorbent backing and further coupled with said spiral antenna;

a cavity behind said spiral antenna and in front of a portion of said energy absorbent backing;

wherein said spiral shaped current paths at said outer portion of said spiral antenna overlap with said energy absorbent siding and wherein said feed-point overlaps said cavity;

a cable connector having an input impedance wherein said cable connector is coupled to the feed-point; and,

a container configured to hold said spiral antenna, said energy absorbent backing, said energy absorbent siding, said cavity, said cable connector; and,

wherein said spiral antenna is configured to enhance cell phone coverage and configured to collect signals intelligence simultaneously.

18. The directional planar spiral antenna of claim 17 wherein said spiral antenna comprises slots wherein said spiral shaped current paths flow along said slots.

19. The directional planar spiral antenna of claim 17 wherein said spiral antenna comprises arms wherein said spiral shaped current paths flow along said arms.

* * * * *