Nov. 17, 1970 R. H. LEWIS 3,541,592

APPLICATION OF WOOD VENEER TO A CONTOURED BASE

Filed Oct. 9, 1967

FIG. 1

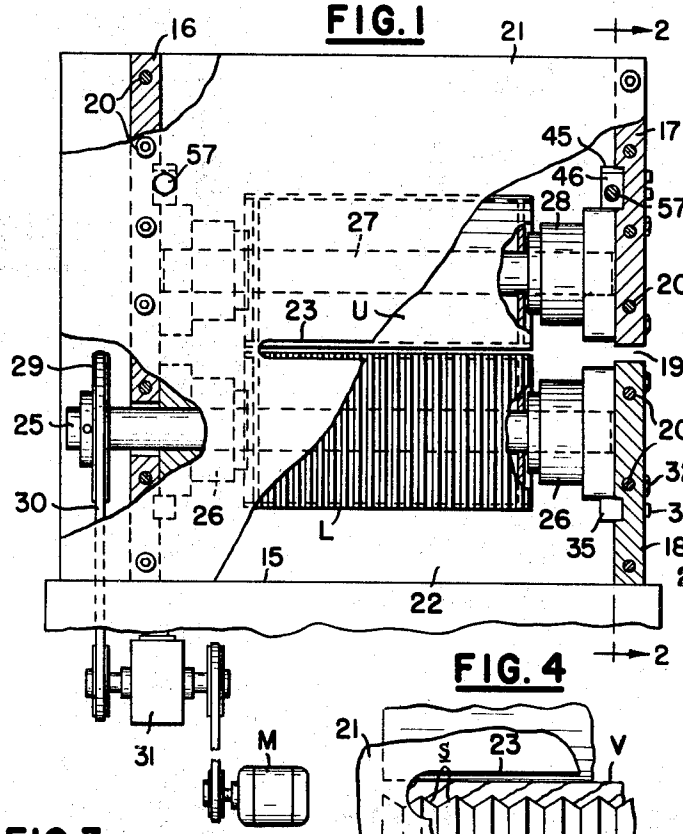

FIG. 2

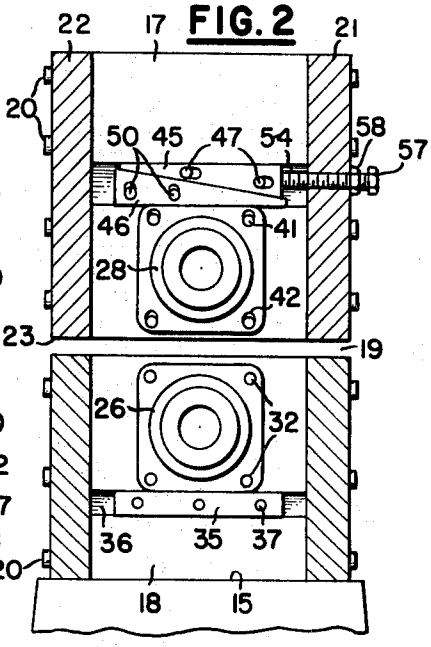

FIG. 4

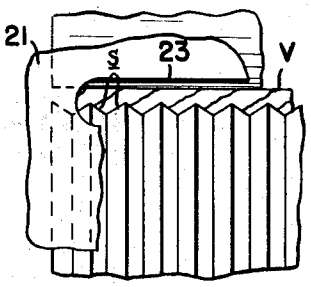

FIG. 5



FIG. 3

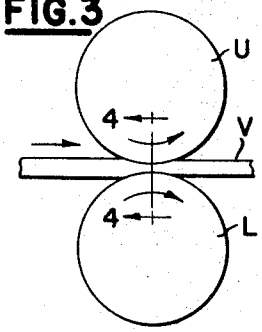

FIG. 6



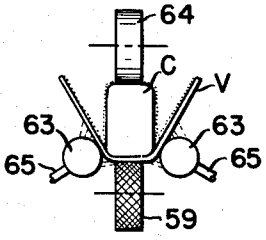

FIG. 8

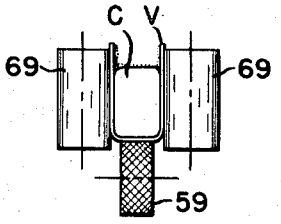

FIG. 9

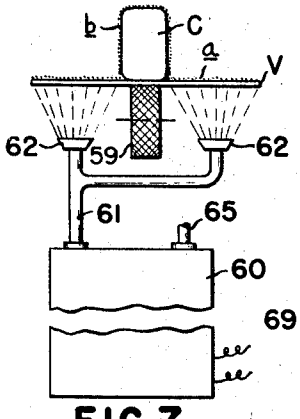

FIG. 7

FIG. 10

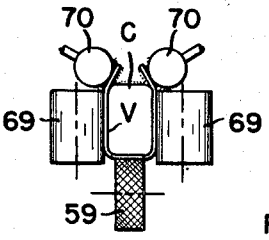

FIG. 11

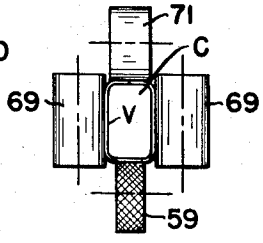

INVENTOR.
RAYMOND H. LEWIS

BY Ephraim Banning

ATTORNEY

United States Patent Office 3,541,592 Patented Nov. 17, 1970

3,541,592

APPLICATION OF WOOD VENEER TO A CONTOURED BASE

Raymond H. Lewis, Fort Lauderdale, Fla., assignor to Roberts Consolidated Industries, Inc., City of Industry, Calif., a corporation of California

Filed Oct. 9, 1967, Ser. No. 677,495
Int. Cl. B27d 1/00
U.S. Cl. 144—315 2 Claims

ABSTRACT OF THE DISCLOSURE

Wood veneer to be bent is subjected initially, along closely spaced lines parallel with its grain, to pressures of many tons p.s.i. which disrupt its fibrous structure. Thereafter vapor heat is applied briefly to the veneer to flexibilize it, and in this condition it is held against a base while pressure is applied to bend it in conformity with irregularites in its faces. Adhesive previously applied bonds the veneer to the base.

This invention relates to a means and method for conditioning wood veneer whereby a degree of flexibility is imparted thereto sufficient for its self-conformation to one or more non-planar faces of a base to which it is permanently united. It involves means (1) for initially breaking down the grain configuration of the wood and/or disrupting its fibrous structure, without noticeable damage thereto or change in its appearance and, when initially affixed to the base, (2) vapor heating of such conditioned areas whereby to facilitate bending thereof to cover one or more contoured faces of the base in exact conformity therewith and to unite thereto at every point over their mutually contacting surfaces.

Wood veneer is commonly produced with a standard thickness of about 1/32". A ready tendency to crack or split requires that it be handled carefully. It is also difficult to apply such a veneer to any contoured base because of insufficient flexibility in its body structure. Although veneered furniture is attractive and greatly in demand, application of the veneer is generally confined to relatively flat surfaces thereof. Use of the finer woods, such as walnut, cherry, maple, rosewood, etc., is attended with all these difficulties. It is accordingly a primary objective of this invention to provide a means and method whereby to condition veneers of diverse woods (1) for facile bending and (2) for expeditious application of such conditioned veneers to their permanent bases with exact conformation to one or more non-planar faces thereof. The furniture industry is but one market for this invention. Other products to benefit therefrom are frames for pictures and mirrors, mouldings, building interior trim, cabinet doors, stair rails, etc.

Further objects and advantages residing in the present invention relate to its adaptability to veneers of different woods some of which have commonly been rejected as too difficult for assembly with contoured bases; to expeditious handling and treatment of wood veneers through the initial and subsequent stages of conditioning and application; and to use of such veneers on non-planar faces of bases where bending is required beyond the normal capacity of any veneer, thereby avoiding its spoilage and rejection.

These and other objects of this invention will appear more fully from the detailed description to follow wherein reference is made to the accompanying drawing exhibiting a suggestive embodiment of means and steps suitable for employment of the invention. In the drawing:

FIG. 1 is a front elevational view of the framework

which encloses and mounts a pair of rollers, one adjustable toward and from the other to vary the clearance therebetween, the framework front wall being broken away to exhibit portions of the two rollers, also the bearings therefor;

FIG. 2 is a vertical sectional view, taken on line 2—2 of FIG. 1, showing in elevation the inside face of the divided framework end wall, together with the bearings carried thereby, but omitting the roller shafts therefrom;

FIG. 3 is an enlarged schematic view showing a piece of veneer in operative position between the two rollers;

FIG. 4 is an enlarged fragmentary section, taken on line 4—4 of FIG. 3;

FIG. 5 is an enlarged fragmentary plan view of one end portion of a piece of veneer as it appears when conditioned;

FIG. 6 is an enlarged end elevation of the veneer piece as it appears after leaving the rollers; and

FIGS. 7–11 are schematic views showing the veneer and its base during successive stages of application of the former to the latter.

The work to be operated upon, according to this invention, consists of an elongated wood veneer piece V and an elongated base C of wood, plywood, chipboard, or other suitable material. Such a base is known as a core, and will be so referred to herein. In cross section the core is substantially uniform from end to end, its length running up to perhaps 16 feet or so. Its cross sectional contour, also uniform throughout its length, is usually such as to provide an attractive design, and may involve one or more faces, with curves convex and/or concave, connected by variously rounded corners, depending largely upon the use for which the finished product is intended. The veneer piece, by contrast, is relatively flat and inflexible, its length is usually coterminous with that of the core, and its form is generally that of a strip elongated in the direction of its grain structure. The strip width desirably is such as to cover one or more selected faces of the core when flexibilized and wrapped thereabout in response to a bending operation.

Obviously a piece of normally-inflexible wood veneer presents a problem when efforts are made to bend it closely around and into exact conformity with one or more faces of a core preparatory to its inseparable bonding therewith. As a first step, the veneer strip must be conditioned for bending; then the faces of the strip and core which are to confront each other should receive a spread of adhesive; then the strip, still flat, is adhesively affixed to one of the core faces; then, while so assembled, the strip and core are advanced together lengthwise adjacent to and/or between a multiplicity of agencies which subject the strip briefly to vapor-heating confined to the area to be bent and then to pressure forces which bend the veneer strip around and down upon the face or faces of the core which are to be covered thereby; and finally an evenly distributed and continuing pressure is directed against the strip for a time sufficient to conform it closely to the confronting contoured face or faces of the core and to induce its bonding therewith. In a general way, this is the present mode of operation involved in the application of relatively inflexible wood veneer strips to cores which may be variously contoured on one or more of their faces. A suggestive mechanism for thus applying conditioned veneer strips to cores of diverse designs is disclosed in the Bechtold Pat. No. 3,296,056 of Jan. 3, 1967, but only when importantly modified as hereinafter noted.

The means and method of this invention comprise (1) the conditioning unit of FIGS. 1–4 and (2) the bending steps outlined in FIGS. 7–11. These two stages in the method may be performed separately, each independent of the other, or the means therefor may be combined

into a single mechanism. Each strip of wood veneer V of a desired width is initially passed through the rollers of the conditioning unit. Thereafter it is stacked along with other similarly conditioned wood veneer pieces, awaiting further treatment by the bending unit at a convenient time; or, alternatively, each such veneer strip, upon delivery from the conditioning unit, may immediately be operated upon by the several instrumentalities comprised in the bending unit. With these preliminary observations, the conditioning unit of FIGS. 1–4 will now be described.

A sturdy type of machine is used, placed desirably between the ends of two tables arranged in tandem (not shown), one for holding a supply of veneer pieces ready for conditioning, and the other for accommodating such pieces after conditioning. A stout stand having a top **15** fixedly supports an enclosing framework comprising an upstanling end wall **16** opposite a two-part end wall formed of upper and lower plates **17** and **18** spaced slightly apart to leave a gap **19** therebetween. The end walls are fixedly joined, as by bolts **20**, to opposite ends of upstanding elongated front and rear walls **21** and **22**, respectively. Between the end walls is extended a pair of horizontal rollers U and L, one above the other with a very slight potential clearance therebetween that is aligned with the gap **19** in one end wall. The front and rear walls are each provided with a horizontal slot **23** in line with the gap **19** and extending away therefrom for the major portion of the lengths of the two rollers U and L.

The lower roller L is mounted fast upon a shaft **25** which is rotatably supported at opposite ends within bearing blocks **26**, one affixed to each end wall **16** and **18**. Similarly the upper roller U is carried upon a shaft **27** whose opposite ends are mounted in bearing blocks **28**, one affixed to each end wall **16** and **17**. A sprocket wheel **29** is mounted fast on the shaft **25** near one end thereof to receive thereover a chain **30** adapted to be driven from a reduction gear **31** to which power is transmitted from a motor M. The lower bearing blocks **26** are fixedly anchored in place with the aid of bolts **32** which traverse the walls **16** and **18** for threaded engagement with the blocks. A bottom support for each bearing block is also provided in the form of a bar **35** in engagement with its under face; a substantial part of this bar is closely fitted within a recess **36** which is extended horizontally across the end wall to which it is connected as by bolts **37**. Since this bar abuts the lower face of the recess and also the bearing block thereabove—both confronting faces lying in a horizontal plane—a very substantial vertical support for the latter is provided. Without this abutment bar, the bolts **32** would tend to shear off in response to the tremendous pressure generated.

The upper bearing blocks **28** are very slightly vertically adjustable. As by bolts **41** traversing the walls **16** and **17** and vertically-elongated slots **42** in the blocks, provision for slight vertical movement is made. Overlying the upper face of each of these blocks are horizontally elongated wedge blocks **45** and **46**, the former being the upper one. Bolts **47** are extended through this block and the proximate end walls to fixedly secure the upper wedge block **45** in place. The lower wedge block **46**, however, is mounted for sliding movement in a horizontal direction, thereby to shift its body vertically whenever its beveled face is advanced along the similar face of the upper wedge block. A support for each lower wedge block which permits such limited movements to take place is provided by bolts **50** which are anchored in the end walls **16** and **17** to extend therefrom through oblique slots **51** formed in the block **46**. The lower wedge block rests upon the upper face of the proximate bearing block **28** to exert a variable pressure thereupon. To provide a fixed abutment for each upper wedge block whereby it may resist vertical movement in response to great

upward pressures transmitted from the wedge block therebelow, I provide an enclosing recess **54** wherein a substantial portion of both blocks **45** and **46** may be fitted. Each recess is extended horizontally across the end wall **16** or **17**, as the case may be, its upper face abutting the top face of the upper block **45**. Operation of the moveable wedge block is facilitated by a bolt **57** in rotatable connection therewith and extended through the front wall **21** with which it is in threaded engagement. A lock nut **58** fitted upon the bolt is adapted to engage with the front wall with varying degrees of friction, depending upon its adjusted position. It will be noted that the uppermost vertical position of the upper roller U is fixed in response to rotation of the operating bolt **57** working through the wedge blocks **45** and **46**; also that the wedge blocks, being partly enclosed within the end walls, serve as horizontal abutments which are adjustable to effectively prevent any upward movement of the upper roller U beyond a selectively fixed point, thereby limiting its clearance with the lower roller L.

The maximum spacing at the nip between the rollers is somewhat less than the thickness of the veneer pieces to be passed therethrough. Assuming the veneer thickness to be about .031"–.032", the operating clearance between the rollers U and L should be adjusted to about .017", or nearly one-half the thickness of the veneer (FIG. 3). The surface of the lower roller is specially formed to provide a multitude of closely spaced projections capable of pressing into the body of the wood to produce therein indentations which have the effect of breaking down its grain configuration and/or disrupting its fibrous structure. As a result, resistance to bending of the veneer around axes parallel with its grain is somewhat reduced, although its body is still generally inflexible. As a simple form of projections suitable for the lower roller L, circumferential scorings are quite effective. A desirable spacing of the score lines *s* (see FIG. 4) is .030", with uniform depths therebetween of .010". A single pass between the rollers requires that the veneer yield momentarily to the clearance provided thereat, viz., .017", but with emergence from between the rollers the veneer tends to expand to about .029" (FIG. 6). The effect upon the fibrous structure of the veneer body, resulting from the pressure forces transmitted momentarily to its under face, is primarily to condition it for subsequent flexibilization. A return to substantially its normal thickness tends to follow, but this is unimportant. It is important, however, that the pressure forces at the nip of the rollers be very considerable, ranging perhaps from 30 to 50 tons p.s.i. The upper roller U, it will be noted, is free to occupy a very slightly lower position when not in use. At such times it may even rest upon the lower roller with no clearance therebetween. Advance of a veneer piece into the nip between the rollers forces the upper roller to move upwardly as far as permitted by adjustment of the wedge block **46**. This adjustment may be very fine, thereby controlling accurately the degree of compressive forces exerted. There is no lost motion or play between the adjusting components involved—an important consideration if generation of desired compressive forces is to be achieved with precision.

To operate dependably and with a wide safety margin where pressures of many tons are involved, it is necessary that the four walls enclosing the rollers provide mountings therefor that are strong and heavy. For this purpose, steel plates of approximately 1½" in thickness are suggested. Particularly is more than usual strength required for such a roller framework because of the horizontal slots **23** and gaps **19** provided in the front and rear walls and at one end thereof for a special purpose. This is to permit accommodation between the rollers of veneer pieces whose widths may vary widely—from less than 6" be conditioned by the rollers in one pass. Wider veneer up to perhaps 2 feet or more. Assuming a length for each roller of 1 foot, any veneer piece up to that width can

pieces can also be operated upon, the rollers optionally confining their engagement with the veneer to one side portion thereof in a first pass and to an opposite sides portion in a second pass. Furthermore, it is possible to run a wide veneer piece through the rollers when only a single edge portion thereof is to be conditioned. In such a case, a major portion of the veneer piece would not be engaged by the rollers, but would remain outside the housing beyond the gap **19** in one end wall. These are some of several advantages to be derived from use of compressor rollers whose clearance is extended out through the slots and gap of the framework walls permitting veneer pieces of varying widths to be moved in, out, and through the machine as circumstances may require from time to time.

The veneer pieces, when conditioned as above described, are ready to enter the second stage of the present method. This involvs first an application of a spread of suitable adhesive to the raw face of the veneer pieces. Desirably this is a contact adhesive which may be conveniently applied in the form of a spray. The adhesive spread *a* so applied adds considerable strength to the veneer. It is not necessary that the adhesive be as completely dry as when applied to a plastic material, since the porous character of thin wood veneer promotes escape of the volatile solvents from the adhesive. A similar spread *b* of adhesive is also applied to each face of the core which is to be covered by the veneer in the operation of bending. With the adhesive spreads so applied, the wood veneer, still relatively flat, is then indexed to the core. This adhesive union between the veneer and core is initially confined to a relatively narrow band extending the full length of the work which is then ready to be advanced lengthwise through a bending machine whose essentials will now be described.

A plurality of aligned knurled rollers **59** interconnected for rotation in unison provides a moving support for the work when rested thereon as indicated in FIGS. 7–11. The cross sectional contour of the core may well determine whether the work shall be positioned with the veneer down or up during its movement through the machine. The simple contour of the core, which is shown in these figures as that of a plain rail, makes it advantageous that the work proceed through the machine with the veneer on the down face of the core (FIG. 7). Its movement through the machine is continuous, one piece of work following closely upon another, when hand-laid in operative positions by experienced workmen.

The first agency to operate upon the work is a heat applying means. The heat transmitted to a veneer of wood must be applied uniformly and with care, otherwise the veneer will tend to become brittle rather than flexible. To meet this problem, the heat is delivered in the form of vapor into the path of movment of the work at a point proximate to its raw face. For his purpose, an electrically-operated vapor generating unit **60** may be utilized, with a short pipe line **61** therefrom terminating in a plurality of spray jets or nozzles **62** proximate to the raw face of the veneer. The vapor discharged from these jets forms a stationary cloud through which the work is advanced during a time interval sufficient for safe and effective heating of the veneer and without noticeable increase in its moisture content. A speed of as much as 20 feet per minute for advance of the work is permissible. As an example, the vapor may be steam generated from water at approximately 40 pounds p.s.i., this being a temperature of close to 350 degrees F., and relatively dry.

This high pressure application of vapor disrupts the cellulose structure in the veneer which then becomes flexibilized to permit prompt subsequent bending through a curve having a radius as short as 3/16". In this crucial step of applying vapor heat to condition wood veneer, this invention marks a distinct advance in the art. The bending machine itself need not be essentially different from that disclosed in the Bechtold Pat. No. 3,296,056 already mentioned, except for the heating unit. Here a different type of heat must be employed to meet the special problems posed by wood veneer, and the use of controlled heat which is transmitted through vapor particles has proved an adequate solution.

FIGS. 8–11 indicate schematically some essential steps through which the work proceeds in the bending operation. After heating, opposite free portions of the on-coming veneer are engaged by certain stationary hollow cam shoes **63** angled to gradually deflect these portions of the veneer toward the sides of the core while a hold-down roller **64** engages its top (FIG. 8). The chamber within each shoe is in communication through a pipe **65** with the vapor-generating unit **60**. Jet openings (not shown) confronting the shoe-engaged faces of the veneer are also provided whereby to release vapor therethrough for discharge against the raw surfaces of the engaged veneer piece. The heat is thus carried to the very point at which the veneer is constrained to execute a bend through a curve of relatively short radius to assure against failure in this delicate operation.

Other rollers **69** thereafter engage the on-coming veneer portions so deflected by the cam shoes, to advance such portions into firm engagement with the opposite sides of the core, leaving free end portions extending thereabove (FIG. 9), then other cam shoes **70**, similar to the shoes **63** and in communication with a source of vapor, engage the free end portions upstanding above the core while discharging vapor thereagainst, to deflect them downwardly toward the core top (FIG. 10), and finally these free end portions so deflected are pressed down by other top rollers **71** into firm engagement with the core top (FIG. 11). These several operating agencies may involve multiple rollers at successive points lengthwise of the machine, also other rollers having special profiles to assure conformation of the veneer with any non-planar contours present in the core design. The positions of these various instrumentalities remain stationary, while the work is in constant motion to be acted upon successively by these agencies, thereby assuring successful bending of the wood veneer pieces after being previously conditioned and heated, as herein described.

It is to be noted that the surface of the veneer is not cut during its passage through the rollers U and L. The profile of the score lines *s* (FIG. 4) which are impressed upon one face of the veneer is such as to avoid duplication of those scores upon its opposite face. Rather, the relatively shallow depths between the tops of the scores are so designed as to compress the veneer body linearly with the end in view of disrupting its fibrous structure, but leaving it otherwise undamaged. The unyielding smooth face of the upper roller U which backs up the veneer when linear compression takes place affords full protection to its opposite face whose appearance remains unaffected. The preliminary conditioning, when followed by vapor heating, imparts a degree of flexibilization to the veneer which permits it to execute bends through curves of short radius. Each such bend may proceed about a single axis or several axes, and involve a single radius or more than one, depending upon the core contours to which the veneer must be conformed. By the means herein disclosed, these operations of conditioning the veneer and applying it to a core may be performed dependably and expeditiously, thus assuring volume production at a minimum cost.

I claim:

1. The method of conditioning wood veneer in the form of an elongated strip having the lay of its grain parallel therewith, wherein substantial pressure forces are applied along closely spaced lines extending lengthwise of the strip, and wherein the strip is adhesively assembled with a core of substantially the same length, followed by subjecting the pressure-treated area of the strip to vapor heat to produce flexibilization thereof, and applying pressure forces to flexibilized areas of the veneer to induce a bend-

ing thereof around and upon selected faces of the core for permanent union therewith.

2. The method of conditioning wood veneer in the form of an elongated strip having the lay of its grain parallel therewith, wherein substantial pressure forces are applied along closely spaced lines extending lengthwise of the strip, and wherein the strip is adhesively assembled with a core of substantially the same length, followed by subjecting the pressure-treated area of the strip to vapor heat to produce flexibilization thereof, and applying pressure forces to flexibilized areas of the veneer to induce a bonding thereof around and upon selected faces of the core for permanent union therewith concurrently with the application of vapor heat to the veneer at selected bending points thereof.

References Cited

UNITED STATES PATENTS

348,051	8/1886	Pine	144—327
510,855	12/1893	Grimstad	144—314
847,966	3/1907	Munz	144—315
1,457,974	6/1923	Hanemann	144—327
2,896,682	7/1959	Elmendorf	144—327
3,296,052	1/1967	Bechtold	156—212
3,296,056	1/1967	Bechtold	156—212

GERALD A. DOST, Primary Examiner

U.S. Cl. X.R.

100—168; 144—320; 156—212

UNITED STATES PATENT OFFICE

CERTIFICATE OF CORRECTION

Patent No. 3,541,592 Dated November 17, 1970

Inventor(s) Raymond H. Lewis

It is certified that error appears in the above-identified patent and that said Letters Patent are hereby corrected as shown below:

Column 3, line 18, "upstanling" should read -- upstandin --. Column 4, line 73, cancel "be conditioned by the rollers one pass. Wider veneer" and insert the same after "width can" in line 75, same column 4.

Signed and sealed this 13th day of April 1971.

(SEAL)
Attest:

EDWARD M.FLETCHER,JR.
Attesting Officer

WILLIAM E. SCHUYLER,
Commissioner of Paten