March 8, 1938. K. IMFELD 2,110,365

INJECTION NOZZLE FOR INTERNAL COMBUSTION ENGINES

Filed Sept. 18, 1936

Fig. 1.

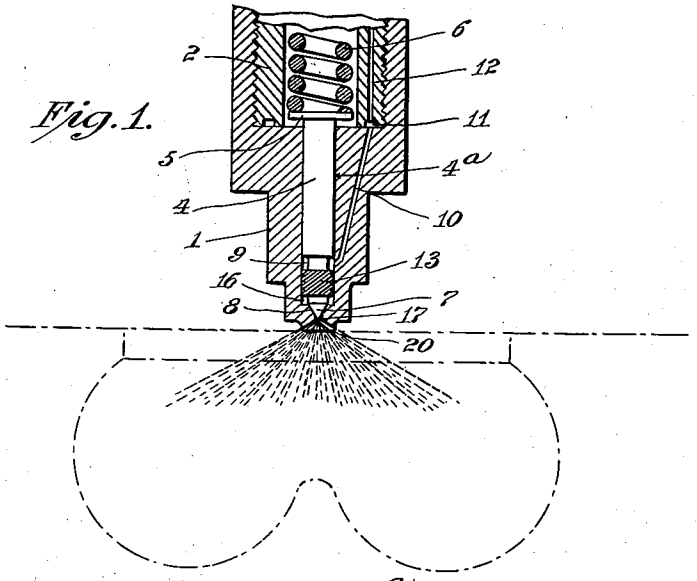

Fig. 2.

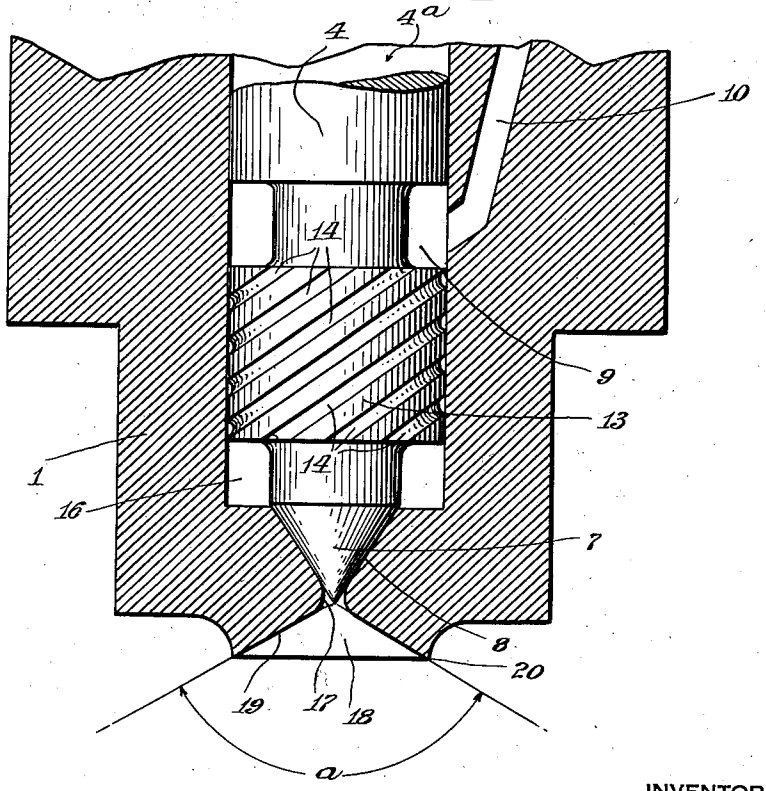

INVENTOR
Karl Imfeld
BY
Redding, Greeley & O'Shea
ATTORNEYS

Patented Mar. 8, 1938 2,110,365

UNITED STATES PATENT OFFICE

2,110,365

INJECTION NOZZLE FOR INTERNAL COMBUSTION ENGINES

Karl Imfeld, St. Gall, Switzerland, assignor to Societe Anonyme Adolphe Saurer, St. Gall, Switzerland, a corporation of Switzerland

Application September 18, 1936, Serial No. 101,394
In Germany February 22, 1936

4 Claims. (Cl. 299—107.6)

In order to secure a thorough mixture of the fuel introduced into the combustion chamber of an internal combustion engine, by means of an injection nozzle, with the combustion air which is also introduced into the combustion chamber, it is desirable, particularly in engines in which the combustion air receives a rotary turbulence, that the angle, with respect to the axis of the injection nozzle, at which the fuel issues from the nozzle shall be as large as possible.

Injection nozzles as heretofore produced, particularly the single orifice needle jet nozzles, permit the development of a comparatively small spray angle, with the result that the desirable thoroughness of mixture of fuel and air is not always secured. It is the object of the present invention to improve the construction of injection nozzles in such manner that the spray angle, that is, the angle at which the spray of fuel from the nozzle is directed into the combustion chamber of the engine, shall be larger than has been deemed possible heretofore, and in accordance with the invention the wall of the opening of the nozzle from which the fuel is discharged is flared outwardly in the form of a cone toward the combustion chamber and the fuel is caused to have a movement of rapid rotation about the axis of injection nozzle as it leaves the discharge opening. As the fuel leaves the throat of the nozzle opening, that is, that portion of the opening through which the fuel is discharged and where it is most restricted or has the smallest cross-section, the fuel is thrown outward, away from the axis of the nozzle, by reason of the centrifugal force imparted by the rapid rotation of the fuel. Being so thrown outward, the fuel flows along the conically flaring wall of the nozzle opening and is thrown off at the edge of the wall in the direction of slant of the wall and leaves the opening in the form of a cone of spray, the angle of such cone being substantially the same as the angle of the conical surface of the nozzle opening. By varying the angle of the conical wall of the nozzle opening, it is possible to impart to the fuel spray that angle of discharge which is best adapted to the requirements of the engine with which the improved nozzle is to be used.

In an engine in which the combustion air has imparted to it a motion of rotary turbulence, it has been found that the angle of the flaring nozzle opening with respect to the axis of the injection nozzle may be from 120° to 150°. In practice it has been found desirable that the outer edge of the flaring nozzle opening shall be sharp rather than rounded. While one specific means for imparting to the fuel, as it leaves the throat of the nozzle opening, a rapid rotary movement, is shown and described herein, it will be understood that such rotary movement might be imparted by other known means.

In the accompanying drawing in which an embodiment of the invention is illustrated,

Figure 1 is a view in longitudinal section of so much of an injection nozzle as is necessary to enable the application thereto of the present invention to be understood, a portion of the engine piston, with a combustion chamber formed in its head, being indicated by broken lines.

Figure 2 is a similar view, in part, of the injection nozzle, but on a larger scale.

The nozzle head 1, the outer end of which is arranged to project somewhat into the combustion chamber of the engine, is shown as screw threaded internally to receive the nozzle body 2 which at its lower end bears tightly against the shoulder of the nozzle head. The usual nozzle needle 4, having a limited movement within the nozzle head in an axial direction, is shown as provided with a plate flange 5 against which bears, as usual, a spring 6 to press the point 7 of the needle closely into the seat 8 formed therefor in the nozzle head. At a suitable distance above its point, the nozzle needle is formed with an annular groove 9 which communicates with the fuel feed line, not necessary to be shown, through a channel or channels, one of which is shown at 10, an annular channel 11 formed in the lower end of the nozzle body 2, and a channel or channels 12, one of which is shown. Below the annular groove 9, the needle is formed with a collar or enlargement 13 which, with the needle, has a close working fit in the chamber 4a of the nozzle head, such collar or enlargement being formed on its surface with helical grooves 14 of small cross-section, such grooves serving to conduct the fuel from the space 9 to a similar space 16 below the collar with which the conical seat 8 of the needle directly communicates, the helical grooves serving to impart to the fuel as it enters the chamber 16 and as it passes therefrom through the nozzle throat or orifice 17, a rapid rotary movement with development of substantial centrifugal force, so that the fuel issues from the throat under the influence of centrifugal action and follows and takes the direction of the conical wall 19 of the flaring nozzle opening 18, which terminates in a sharp edge at 20.

The fuel is thus discharged from the injection nozzle at all points about the edge 20 of the

nozzle opening in the form of a cone of spray which has the same angle as the conical wall 19. It will be noted that the tip of the needle 4 enters within the throat 17, the orifice of the throat being of such diameter as will permit the flow of the proper volume of fluid when the needle is raised, the wall of the throat being preferably curved and merged into the flaring wall 19 of the nozzle opening 18, substantially as shown in Figure 2.

It will be understood that when the pressure of fluid delivered through the channels 12, 11 and 10 into the chamber 16 is sufficient to overcome the resistance of the spring 6, the point 7 of the needle is then lifted from the valve seat 8 and the fuel flows into the chamber with a rapid movement of rotation with development imparted by the helical grooves 14 and passes thence between the needle and its seat and through the throat 17, retaining its rapid movement of rotation, so that it follows the flaring wall 19 of the nozzle opening 18 and is discharged from the edge 20 thereof as a cone of spray.

It will be further understood that by varying the angle a of the flaring opening 18, it is possible to adapt the nozzle to the particular requirements of the engine with which it is used, securing that angle of discharge which is most favorable under the conditions of operation.

I claim as my invention:

1. In an injector nozzle for an internal combustion engine, a nozzle head having a conical valve seat in its lower end terminating in a discharge opening having its wall curved to form a throat, a cylindrical bore extending upward from the valve seat a nozzle needle movable within the bore of the nozzle having at its lower end a valve for the valve seat, means for imparting rotation to the fuel as it is discharged, and yielding means for holding the valve to the valve seat.

2. In an injector nozzle, a nozzle head having a conical valve seat in its lower end terminating in a discharge opening having its wall curved to form a throat, a cylindrical bore extending upward from the valve seat, a nozzle needle movable within the bore of the nozzle head having at its lower end a valve for the valve seat, having above the valve a collar fitting the bore of the valve head and having its surface provided with helical grooves, the nozzle needle being of less diameter than the collar above and below it so as to form an annular chamber above the collar and an annular chamber below it, the nozzle head having in its wall an inlet for liquid fuel leading to the chamber above the collar, and yielding means for holding the valve to the valve seat.

3. In an injector nozzle, a nozzle head having a conical valve seat in its lower end terminating in a discharge opening having its wall curved to form a throat, the nozzle head below the throat having formed therein a flaring nozzle opening, a cylindrical bore extending upward from the valve seat, a nozzle needle movable within the bore of the nozzle head having at its lower end a valve for the valve seat, having above the valve a collar fitting the bore of the nozzle head, and having its surface provided with helical grooves, the nozzle needle being of less diameter than the collar above and below it so as to form an annular chamber above the collar and an annular chamber below it, the nozzle head having in its wall an inlet for liquid fuel leading to the chamber above the collar and yielding means for holding the valve to the valve seat.

4. In an injector nozzle, a nozzle head having a conical valve seat in its lower end terminating in a discharge opening having its wall curved to form a throat, the nozzle head below the throat having formed therein a flaring nozzle opening terminating in a sharp edge, a cylindrical bore extending upward from the valve seat, a nozzle needle movable within the bore of the nozzle head having at its lower end a valve for the valve seat, having above the valve a collar fitting the bore of the nozzle head, and having its surface provided with helical grooves, the nozzle needle being of less diameter than the collar above and below it so as to form an annular chamber above the collar and an annular chamber below it, the nozzle head having in its wall an inlet for liquid fuel leading to the chamber above the collar, and yielding means for holding the valve to the valve seat.

KARL IMFELD.