(19) Europäisches Patentamt
European Patent Office
Office européen des brevets

(11) EP 0 850 711 B1

(12) **EUROPEAN PATENT SPECIFICATION**

(45) Date of publication and mention of the grant of the patent:
23.05.2001 Bulletin 2001/21

(51) Int Cl.[7]: **B21K 1/76**

(21) Application number: **97122837.4**

(22) Date of filing: **23.12.1997**

(54) **Process and machine for forging rod-shaped article having deformed portion at an end thereof**

Verfahren und Maschine zum Schmieden eines Gegenstandes mit einem deformierten Endteil

Procédé et machine pour forger un article en forme de barre ayant une extrémité déformée

(84) Designated Contracting States:
DE GB IT

(30) Priority: **24.12.1996 JP 35604696**

(43) Date of publication of application:
01.07.1998 Bulletin 1998/27

(73) Proprietor: **SUMITOMO HEAVY INDUSTRIES, LTD.**
Shinagawa-ku, Tokyo 141-8686 (JP)

(72) Inventors:
- **Ozaki, Yutaka**
  Uma-gun, Ehime (JP)
- **Iwase, Akio**
  Niihama-shi, Ehime (JP)

(74) Representative: **VOSSIUS & PARTNER**
Siebertstrasse 4
81675 München (DE)

(56) References cited:
- **PISCHEL H: "STAND UND ENTWICKLUNGSTENDENZEN BEIM HERSTELLEN VON PLEUELN" WERKSTATT UND BETRIEB, vol. 123, no. 12, 1 December 1990, pages 949-955, XP000173635**
- **PATENT ABSTRACTS OF JAPAN vol. 014, no. 375 (M-1010), 14 August 1990 & JP 02 137636 A (HONDA MOTOR CO LTD), 25 May 1990,**
- **PATENT ABSTRACTS OF JAPAN vol. 006, no. 004 (M-106), 12 January 1982 & JP 56 128636 A (KAWASAKI YUKOU KK), 8 October 1981,**
- **PATENT ABSTRACTS OF JAPAN vol. 008, no. 189 (M-321), 30 August 1984 & JP 59 078743 A (HONDA ENGINEERING KK;OTHERS: 01), 7 May 1984,**
- **PATENT ABSTRACTS OF JAPAN vol. 016, no. 529 (M-1332), 29 October 1992 & JP 04 197546 A (HONDA MOTOR CO LTD), 17 July 1992,**

Note: Within nine months from the publication of the mention of the grant of the European patent, any person may give notice to the European Patent Office of opposition to the European patent granted. Notice of opposition shall be filed in a written reasoned statement. It shall not be deemed to have been filed until the opposition fee has been paid. (Art. 99(1) European Patent Convention).

EP 0 850 711 B1

Description

[0001] The present invention relates to a process and a machine for forging a rod-shaped article having a deformed portion at an end thereof. The term "a rod-shaped article having a deformed portion at an end thereof" means in a broad sense a rod-shaped member having a portion at least at one end thereof that is different in configuration from the rod-shaped member, It means in a narrow sense the above-mentioned rod-shaped article with the deformed portion having a concave or depressed region at an end thereof. Representative examples of the rod-shaped articles having the deformed portion at the end(s) thereof include connecting rods, spanners, and universal joint yokes. These rod-shaped articles are conventionally produced by means of closed die forging or full enclosed die forging.

[0002] A process for manufacturing a connecting rod by means of the closed die forging, see e.g. "Stand und Entwicklungstendenzen beim Herstellen von Pleueln", H. Pischel, Werkstatt und Betrieb, vol. 123, no 12, 1.12.1990, is described below. A log is cut out of a rod material. The cut log is preformed with, for example, forging rolls. The preformed log is then subjected to the closed die forging with a press or a hammer into a connecting rod. The closed die forging is typically involved in four steps : upsetting, roughing, finishing, and deburring.

[0003] The closed die forging uses upper and lower die halves and proceeds with a burr produced at several stages of the process. More specifically, a heated log on the lower die half is stretched outward by means of applying pressure to fill almost all cavity of the lower die half. At the same time, the log enters the upper die half. An excessive log is flown out of the die as a burr after the die halves are filled with the log. The burr is immediately cooled because it is thin, increasing a deformation resistance of the burr. As a result, the log material heated become more likely to migrate within the die having a smaller resistance. The migrated log material fills all over the gaps between the upper and the lower die halves. Thus, the closed die forging can only be achieved with the formation of burrs.

[0004] However, the burrs formed at each stage mean a lower yield of the material. The yield is typically in a range of 60-70%. Therefore, the closed die forging is not cost-effective.

[0005] The full enclosed die forging is a solution for the problem of the yield. The full enclosed die forging typically uses a number of separate dies and punches. In the full enclosed die forging, a log is cut out of a material and is preformed. The preformed log is then held by the separate dies for the application of pressure. At that time, the log is pressed by the separate dies except for a gap into which punches are to be inserted. The punches are then pressed through the gap to form an end of the log into a desired shape.

[0006] The full enclosed die forming has a yield of approximately 100%. However, it has the following drawbacks. The log should be in a fully enclosed condition in the full enclosed die forming. With this respect, the separate dies are required to eliminate any gaps between the separate dies and the log during the application of the pressure. This may be achieved by using a combination die. If the volume of the log is not exactly equal to that of a final product and there is an excess of the log material, it is flown out through the mating surface of the separate die and the punch, causing a thin burr. A finishing step is thus required to remove the burr. On the other hand, a fewer amount of the log material results in an underfilled portion at a part of the final product. In addition, only the separate die and the punch having an end of simple configuration can be used in order to withstand a large stress applied to that end. The dies and/or punches with such a simple end cannot round a corner of the final product. A stress may be concentrated at the corner of the product, badly affecting a mechanical strength thereof. Furthermore, the full enclosed die forging is not suitable for mass-production because of the following viewpoints.

[0007] First, a considerably high pressure is required to impart the material flowability because the log is held by a number of separate dies for the application of the pressure. Thus the preforming should be made with a high dimensional accuracy. However, there is no such a preforming technique that can be used with a high dimensional accuracy.

[0008] Second, the heated log resides in the die for relatively long time during the forging. A die having a complex configuration is required. Such a die has a relatively short lifetime.

[0009] Third, a machine for the full enclosed die forging has a complex structure involving, for example, a number of separate dies. Therefore, it is difficult to transfer the log effectively from one die into another. Articles are manufactured one by one, with a low productivity.

[0010] For the above-mentioned reasons, the full enclosed die forging has not been used for mass-production of articles. For the mass-production of such articles, the closed die forging of a lower yield has been used currently.

[0011] Therefore, an object of the present invention is to provide a forging process that is suitable for mass-production with a high yield of rod-shaped articles having a deformed portion at an end thereof.

[0012] A second object of the present invention is to provide a forging process that can be used to round a corner of a rod-shaped article without forming a thin burr on the surface of the article.

[0013] A third object of the present invention is to provide a forging process that can be used for preforms with a lower dimensional accuracy.

[0014] A fourth object of the present invention is to provide a forging machine suitable to achieve the above-mentioned objects.

[0015] A fifth object of the present invention is to pro-

vide a forging machine with a simple structure, which can transfer logs with a high efficiency between dies.

[0016] A sixth object of the present invention is to provide a forging machine having dies of a longer lifetime.

[0017] A forging process according to the present invention comprises: a full enclosed die forging step for obtaining a formed log having a concave portion at least at one end thereof, by means of applying pressure to a preformed rod-shaped log with a first upper die half and a first lower die half from the direction perpendicular to the axial direction of the log and with at least one horizontal punch from the axial direction of said log; a finish forging step for applying pressure to the formed log with a second upper die half and a second lower die half from the direction perpendicular to the axial direction of the formed log to produce a burred log having burrs; and a deburring step for removing burrs from the burred log.

[0018] A forging machine according to the present invention comprises an upper die holder and a lower die holder. The upper die holder has a first upper die half for the full enclosed die forging, a second upper die half for the finish forging, and a third upper die half for the deburring, that are arranged in this order. The lower die holder has a first lower die half for the full enclosed die forging, a second lower die half for the finish forging, and a third lower die half for the deburring, that are arranged in this order. A horizontal punch operational mechanism with at least one punch is provided at the position where the first lower die half for the full enclosed die forging is located. The horizontal punch operational mechanism is for pressing said at least one horizontal punch into a log held by the first upper and the lower die halves.

Fig. 1 is a flow diagram for use in describing steps for a conventional closed die forging;

Fig. 2 is a cross-sectional view for use in describing a conventional full enclosed die forging;

Fig. 3 is a flow diagram for use in describing a conventional full enclosed die forging;

Fig. 4 is a schematic plan view illustrating arrangement of dies provided in a lower die holder in a forging machine according to an embodiment of the present invention;

Fig. 5 is a cross-sectional view of a part of the forging machine, taken on line A-A in Fig. 4;

Fig. 6 is a view for use in describing steps of a forging process according to an embodiment of the present invention;

Fig. 7 is a view for use in describing a full enclosed forging step I in the forging process shown in Fig. 6;

Fig. 8 is a view for use in describing a seal die forging step II in the forging process shown in Fig. 6;

Fig. 9 is a view for use in describing a product obtained at a finish forging step III in the forging process shown in Fig. 6;

Fig. 10 is a cross-sectional view in a die, taken on line B-B in Fig. 9; and

Fig. 11 is a cross-sectional view in a die, taken on line C-C in Fig. 9.

[0019] Referring to Fig. 1, a conventional process for forging a connecting rod by means of the closed die forging is described. The die is typically formed of an upper die half and a lower die half. In the following description, the lower and the upper die halves may collectively be referred to as a die. At a first step S1, a log is cut out of a material. At a second step S2, the log is preformed with, for example, forging rolls. At a third step S3, the closed die forging is carried out. The closed die forging is carried out by using a press or a hammer. It typically includes an upsetting step S3-1, a roughing step S3-2, a finishing step S3-3, and a deburring step S3-4. The log is finished into a connecting rod through the above-mentioned four steps S3-1 through S3-4.

[0020] The closed die forging uses upper and lower die halves and proceeds with burrs produced at several stages of the process. More specifically, a heated log on the lower die half is stretched outward by means of applying pressure to fill almost all cavity of the lower die half. At the same time, the log enters the upper die half. An excessive log is flown out of the die as burrs after the die halves are filled with the log. The burrs are immediately cooled because they are thin, increasing a deformation resistance of the burrs. As a result, the log material heated become more likely to migrate within the die having a smaller resistance. The migrated log material fills all over the gaps between the upper and the lower die halves. Thus, the closed die forging can only be achieved with the formation of burrs.

[0021] However, the burrs formed at each stage mean a lower yield of the material. The yield is typically in a range of 60-70%. Therefore, the closed die forging is not cost-effective.

[0022] Referring to Figs. 2 and 3, manufacturing of the connecting rods by means of conventional full enclosed die forging is described. In Fig. 2, the full enclosed die forging typically uses a number of separate dies 11, 12 and punches 13, 14. In Fig. 3, in the full enclosed die forging, a log is cut out of a material at a first step S11. The log is then preformed at a second step S12. At a third step S13 the log is subjected to the full enclosed die forging. In the full enclosed die forging, the preformed log 10 is held by the separate dies 11 and 12 for the application of pressure. At that time, the log 10 is pressed by the separate dies 11 and 12 except for a gap into which punches 13 and 14 are to be inserted. The punches 13 and 14 are then pressed through the gap to form an end of the log 10 into a desired shape.

[0023] The full enclosed die forming has a yield of approximately 100%. However, it has the following drawbacks. The log should be in a fully enclosed condition in the full enclosed die forming. With this respect, the separate dies 11 are 12 are required to eliminate any gaps between the separate dies 11 and 12 and the log 10 during the application of the pressure. This may be

achieved by using a combination die. If the volume of the log 10 is not exactly equal to that of a final product and there is an excess of the material of the log 10, it is flown out through the mating surface of the separate dies 11 and 12 and the punches 13 and 14, causing a thin burr 15. A finishing step is thus required to remove the burr 15. On the other hand, a fewer amount of the material of the log 10 results in an underfilled portion at a part of the final product. In addition, only the separate dies 11 and 12 and the punches 13 and 14 having an end of simple configuration can be used in order to withstand a large stress applied to that end. The dies and/or punches with such a simple end cannot round a corner of the final product. A stress may be concentrated at the corner of the product, badly affecting a mechanical strength thereof. Furthermore, the full enclosed die forging is not suitable for mass-production because of the above-mentioned viewpoints.

[0024] Referring to Figs. 4 and 5, a forging machine according to a preferred embodiment of the present invention is described. In Fig. 4, the forging machine comprises a lower die holder 20. The lower die holder 20 has a lower die half 21 for the full enclosed die forging (a first lower die half), a lower die half 22 for the seal die forging (a second lower die half), a lower die half 23 for the finish forging (a third lower die half), and a lower die half 24 for the deburring (a fourth lower die half). In Fig. 5, the forging machine further comprises an upper die holder 30, 32. The upper die holder 30, 32 has an upper die half 31 for the full enclosed die forging (a first upper die half), an upper die half for the seal die forging (a second upper die half), an upper die half for the finish forging (a third upper die half), and an upper die half for the deburring (a fourth upper die half). In Fig. 5, only the upper die half 31 for the full enclosed die forging is illustrated. The lower and the upper die halves 21 and 31 for the full enclosed die forging are oppositely arranged to each other. Likewise, the lower 22 and the upper die halves for the seal die forging are oppositely arranged to each other. The lower 23 and the upper die halves for the finish forging are oppositely arranged to each other. The lower 24 and the upper die halves for the deburring are oppositely arranged to each other.

[0025] The lower and the upper die halves 21 and 31 for the full enclosed die forging are those for forging a log in an enclosed cavity. The lower and the upper die halves 21 and 31 are different from conventional die halves of this type. The die halves are not required to be configured exactly with the preform. In other words, the die halves are required only to have a configuration with an approximate dimensional accuracy that allows rough forging because burring is carried out at a subsequent separate step.

[0026] The die for the seal die forging (the lower die half 22 and the upper die half), the die for the finish forging (the lower die half 23 and the upper die half), the die for the deburring (the lower die half 24 and the upper die half) may be same as the conventional dies for the seal die forging, the finish forging, and the deburring, respectively. The transfer of the log from the lower die half 21 to the lower die half 22, from the lower die half 22 to the lower die half 23, from the lower die half 23 to the lower die half 24 is made by a transfer arm which is not shown.

[0027] Structure of the forging machine using the lower die half 21 for the full enclosed die forging is described with reference to Fig. 5. In this forging machine, the upper die half 31 for the full enclosed die forging is fixed to the upper die holder 32. The upper die holder 32 constantly receives a downward force applied by a high pressure fluid filled in a pressure chamber 34 from a fluid inlet port 34'. More specifically, the upper die holder 32 is inserted into the pressure chamber 34 with a portion thereof being sealed with a seal ring 32-1. A number of guiding posts 36 permit only up and down movement of the upper die holder 32. The lower limit of movement of the upper die holder 32 is defined by a stopper nut 37 attached to the guiding post 36. The upper die half 31 is held by the upper die holder 32 by means of clamping mechanism 38. Other upper die halves are similar to the above.

[0028] On the other hand, the lower die half 21 is fixed to the lower die holder 20. The lower die holder 20 has a pair of punch holders 41. The punch holders 41 are movable horizontally with respect to the sides of the lower die half 21. The punch holders 41 are movable horizontally by means of a toggle link mechanism 42 formed of three links. More specifically, a pair of sliding blocks 43 are provided at a position close to the pair of punch holders 41 of the lower die holder 20. The sliding blocks 43 are movable in up and down direction. The sliding blocks 43 each has a pressure receiving portion 43a. A sliding block presser member 39 is provided at the position opposite to the pressure receiving portion 43a in the upper die holder 30. An end of the toggle link mechanism 42 is connected to the sliding block 43. When the upper die holder 30 moves downward and the pressure receiving portion 43a of the sliding block 43 is pressed by the sliding block presser member 39 of the upper die holder 30, the sliding block 43 moves downward. As a result, the punch holders 41 move in the horizontal direction by means of the toggle link mechanism 42.

[0029] The punch holders 41 are each provided with a punch 44 to apply pressure to the ends of the log from the horizontal direction. A spring 45 is placed between the lower die holder 20 and the punch holders 41. The spring 45 is for biasing the punch holders 41 in the direction away from the lower die half 21. The biasing force obtained by the spring 45 is smaller than the force applied to the toggle link mechanism 42 from the sliding block presser member 39 through the pressure receiving portion 43a. Therefore, the punch holders 41 are withdrawn by the spring 45 when no force is applied to the pressure receiving portion 43a, which in turn moves the sliding block 43 upward.

[0030] In this forging machine, a heated log is placed

in the lower die half 21 and the machine is operated. The upper die holder 30 moves downward and the upper die half 31 comes into contact with the lower die half 21. At that time, the upper die half 31 is urged to the lower die half 21 by the pressure generated from the fluid in the pressure chamber 34. At the same time, the sliding block presser member 39 of the upper die holder 30 abuts with the pressure receiving portion 43a. When the upper die holder 30 lowers further, then the sliding block 39 also moves downward. The punch holders 41 move forward by the toggle link mechanism 42. The punches 44 are then pressed into both sides of the log in the die halves 21 and 31 and the end of the log is deformed into a desired shape (such as a concave). The desired shape formed at the end of the log is determined by the shape of the punch 44.

[0031] During the above-mentioned formation, the upper die holder 30 is lowered, so that the fluid in the pressure chamber 34 returns to an accumulator (not shown) provided outside the machine. After the formation, the upper die holder 30 moves upward and the punch holder 41 is withdrawn due to the spring force by the spring 45. The high pressure fluid is again flown into the pressure chamber 34 from the accumulator and the upper die holder 32 is pushed downward. An ejector pin 46 is provided beneath the lower die half 21 in the lower die holder 20 to push and remove the formed log from the lower die half 21.

[0032] Referring to Fig. 6, a forging process according to an embodiment of the present invention is described in conjunction with a case where the above-mentioned forging machine is used. Fig. 6 illustrates steps of the forging process according to the present invention. Fig. 7 is a view for use in describing a full enclosed forging step I in the forging process shown in Fig. 6. Fig. 8 is a view for use in describing a seal die forging step II in the forging process shown in Fig. 6. Figs. 9A through 9C are views for use in describing a product obtained at a finish forging step III in the forging process shown in Fig. 6. This embodiment is suitable for forming rod-shaped articles having a deformed portion at an end thereof, and especially for manufacturing of the connecting rods.

[0033] In Fig. 6, a log 51 is cut out of the rod material at a first step S31. At a second step S32, the log 51 is preformed. The preformed log 51A has a larger diameter at the central portion and ends thereof. The full enclosed die forging step I, the seal die forging step II, the finish forging step III, and the deburring step IV are successively carried out. While Fig. 6 is for the case where two forged articles are taken, Figs. 7 and 8 are for the case where one forged article is taken for clarifying the description. The productivity is higher for the former case but the present invention can be applied to both cases.

[0034] The preforming at the second step S32 is made by using forging rolls operated at a high forming rate. Since the rough forging is made in the full enclosed die forging step I after the preforming, no strict dimensional accuracy is required during the preforming step. No difficult forming is required, too.

[0035] The full enclosed forging step I shown in Figs. 6 and 7 are as follows. The formed log 51A is placed in the lower die half 21. the log 51A is pressed by the upper die half 31 in the direction perpendicular to the axial direction of the formed log 51A to flatten the formed log 51A. The punch 44 is pressed into the flattened log from both sides thereof in the axial direction, with the portion of the flattened log except for both sides along the axis thereof being enclosed by the lower and upper die halves 21 and 31, thereby forming a desired shape at both ends of the flattened log. For the connecting rod, a concave portion in a big end 51-2 and a small end 51-3 are formed for the embodiment in Fig. 7 to obtain one article at once. On the other hand, the concave portions in the big ends are formed at both sides for the embodiment in Fig. 6 to obtain two articles at once. The concave portion in the big end 51-2 cannot be formed completely when it is pressed only from the upward and the downward directions because of lower fluidability of the material, with some burrs on the surface at the junction between the upper and the lower die halves corresponding to the concave portion. The application of pressure in the horizontal direction, achieved with the punch 44, increases the fluidability of the material. This results in distribution of the material with a high accuracy. Therefore, good rough forging can be made. After the completion of the full enclosed die forging step I, the formed log is transferred to the die for the seal die forging by means of the transfer arm.

[0036] In the seal die forging step II shown in Figs. 6 and 8, the log is pressed from upward and downward by means of the lower die half 22 for the seal die forging and the corresponding upper die half. The lower die half 22 is formed of a lower die body 22-1 and a lower punch 22-2 that moves up and down relative to the lower die body 22-1. The lower punch 22-2 moves upward after the rough forging and is used to release a forged article 51B from the lower die half 22. The lower punch 22-2 may be formed integrally with the lower die body 22-1. In this event, an ejector pin may be used that is similar to the ejector pin 46 described in Fig. 5.

[0037] The seal die forging step II provides the rough forging. The rod section of the connecting rod that is the forged article 51B has a generally H-shaped cross section. Both ends of the connecting rod has a concave or convex cross section. There is no problem if a small underfill 51-4 is formed in, for example, an outer surface of the end portions. The material is filled in the underfill 51-4 during the burring operation in the finish forging step III.

[0038] A major purpose of the seal die forging step II is to reduce the fluidability and the forging pressure in the subsequent finish forging step III as much as possible. Therefore, this step may be omitted when the forged article has a cross section with relatively less irregularities or has an end with a smaller concave. In such a

case, the lower die half 21 and the upper die half for the full enclosed die forging are referred to as the first lower die half and the first upper die half, respectively. The lower die half 23 and the upper die half for the finish forging are referred to as the second lower die half and the second upper die half, respectively. The lower die half 24 and the upper die half for the deburring are referred to as the third lower die half and the third upper die half, respectively.

[0039] The finish forging step III shown in Fig. 6 is burring forging performed in the typical closed die forging. Fig. 9 shows a forged article 51C obtained by the finish forging step III. A burr 51-5 is formed on the surface of the forged article 51C as shown in Fig. 10. The burr 51-5 is the one necessary for the closed end forging as described above.

[0040] In the previous step (the seal die forging step II or the full enclosed die forging step I), the material is distributed into the die with a high accuracy and good condition. This means that the burr 51-5 of the log in the die is minimum and the forging load is small in this finish forging step III. The finish forging step III requires a small forging load and uses the upper and the lower die halves rather than the combination die for the full enclosed die forging. As shown in Fig. 11, R portions 23-1 and 33-1 can be formed in the lower die half 23 and a corresponding upper die half 33 for the finish forging. As a result, a corner of the forged article 51C may be rounded.

[0041] The deburring step IV shown in Fig. 6 is the deburring step similar to the deburring process in the conventional closed die forging. The burr 51-5 shown in Fig. 9 is removed during the deburring step IV to complete the forged article.

[0042] According to the forging process of the present invention, the full enclosed die forging step I requires no strict dimensional accuracy or difficult forming. The burring is accepted in the subsequent steps. Therefore, the lifetime of the dies for the full enclosed die forging can be elongated and the forging machine becomes simpler. In addition, the logs may be transferred between the adjacent dies more effectively, allowing mass-production of the forged articles.

[0043] The material can be distributed with a high accuracy in the die during the full enclosed die forging step I or the seal die forging step II. Therefore, the minimum burr is generated and the yield of the production is increased. In addition, the final formation is carried out with the upper and the lower die halves, so that the corner of the forged article may be rounded.

Claims

1. A forging process comprising:

a full enclosed die forging step for obtaining a formed log (51) having a concave portion (51-2) at least at one end thereof, by means of applying pressure to a preformed rod-shaped log (51A) with a first upper die half (31) and a first lower die half (21) from the direction perpendicular to the axial direction of said log and with at least one horizontal punch (44) from the axial direction of said log;

a finish forging step for applying pressure to said formed log (51B) with a second upper die half (33) and a second lower die half (23) from the direction perpendicular to the axial direction of said formed log to produce a burred log (51C); and

a deburring step for removing a burr (51-5) from said burred log.

2. A forging process as claimed in claim 1, wherein a seal die forging step is carried out between said full enclosed die forging step and said finish forging step, for the rough forging by means of applying pressure to said formed log (51B) obtained during said full enclosed die forging step, the application of the pressure being made with a third upper die half and a third lower die half (22) from the direction perpendicular to the axial direction of said log.

3. A forging machine comprising:

an upper die holder (30) and a lower die holder (20), said upper die holder (30) having a first upper die half (31) for the full enclosed die forging, a second upper die half (33) for the finish forging, and a third upper die half for the deburring, that are arranged in this order, said lower die holder (20) having a first lower die half (21) for said full enclosed die forging, a second lower die half (23) for said finish forging, and a third lower die half (24) for said deburring, that are arranged in this order; and a horizontal punch operational mechanism (41, 42, 43, 44, 45) with at least one punch is provided at the position where the first lower die half (21) for said full enclosed die forging is located; said horizontal punch operational mechanism (41, 42, 43, 44, 45) being for pressing said at least one horizontal punch (44) into a log held by said first upper (31) and lower (21) die halves.

4. A forging machine as claimed in claim 3, wherein said upper die holder (30) has an upper die half for said seal die forging between said first upper die half and said second upper die half, and wherein said lower die holder (20) has a lower die half (22) for said seal die forging between said first lower die half and said second lower die half.

5. A forging machine as claimed in claim 4, wherein R portions (23-1, 33-1") are formed inside said second upper die half (33) and said second lower die half (23) for said finish forging to round a corner of said log.

Patentansprüche

1. Schmiedeverfahren, das die folgenden Schritte aufweist:

   einen Schmiedeschritt im voll gekapselten Gesenk zur Herstellung eines geformten Blocks (51) mit einem konkaven Abschnitt (51-2) an mindestens einem Ende des Blocks mittels Druckanwendung auf einen vorgeformten stabförmigen Block (51A) mit einer ersten oberen Gesenkhälfte (31) und einer ersten unteren Gesenkhälfte (21) aus der zur Achsenrichtung des Blocks senkrechten Richtung und mit mindestens einem horizontalen Stempel (44) aus der Achsenrichtung des Blocks;
   einen Fertigschmiedeschritt zur Druckanwendung auf den geformten Block (51B) mit einer zweiten oberen Gesenkhälfte (33) und einer zweiten unteren Gesenkhälfte (23) aus der zur Achsenrichtung des geformten Blocks senkrechten Richtung, um einen gratigen Block (51C) herzustellen; und
   einen Abgratschritt zum Entfernen eines Grats (51-5) von dem gratigen Block.

2. Schmiedeverfahren nach Anspruch 1, wobei für das Vorschmieden mittels Druckanwendung auf den geformten Block (51B), den man während des Schmiedeschritts im voll gekapselten Gesenk erhält, zwischen dem Schmiedeschritt im voll gekapselten Gesenk und dem Fertigschmiedeschritt ein Schmiedeschritt im abgedichteten Gesenk ausgeführt wird, wobei die Druckanwendung mit einer dritten oberen Gesenkhälfte und einer dritten unteren Gesenkhälfte (22) aus der zur Achsenrichtung des Blocks senkrechten Richtung erfolgt.

3. Schmiedevorrichtung, die aufweist:
   einen oberen Gesenkhalter (30) und einen unteren Gesenkhalter (20), wobei der obere Gesenkhalter (30) eine erste obere Gesenkhälfte (31) zum Schmieden im voll gekapselten Gesenk, eine zweite obere Gesenkhälfte (33) zum Fertigschmieden und eine dritte obere Gesenkhälfte zum Abgraten aufweist, die in dieser Reihenfolge angeordnet sind, wobei der untere Gesenkhalter (20) eine erste untere Gesenkhälfte (21) zum Schmieden im voll gekapselten Gesenk, eine zweite untere Gesenkhälfte (23) zum Fertigschmieden und eine dritte untere Gesenkhälfte (24) zum Abgraten aufweist, die in dieser Reihenfolge angeordnet sind; und einen horizontalen Stempelbetätigungsmechanismus (41, 42, 43, 44, 45) mit mindestens einem Stempel, der in der Position vorgesehen ist, wo sich die erste untere Gesenkhälfte (21) zum Schmieden im voll gekapselten Gesenk befindet; wobei der horizontale Stempelbetätigungsmechanismus (41, 42, 43, 44, 45) dazu dient, den mindestens einen horizontalen Stempel (44) in einen Block zu pressen, der durch die ersten oberen (31) und unteren (21) Gesenkhälften festgehalten wird.

4. Schmiedevorrichtung nach Anspruch 3, wobei der obere Gesenkhalter (30) eine obere Gesenkhälfte zum Schmieden im abgedichteten Gesenk zwischen der ersten oberen Gesenkhälfte und der zweiten oberen Gesenkhälfte aufweist, und wobei der untere Gesenkhalter (20) eine untere Gesenkhälfte (22) zum Schmieden im abgedichteten Gesenk zwischen der ersten unteren Gesenkhälfte und der zweiten unteren Gesenkhälfte aufweist.

5. Schmiedevorrichtung nach Anspruch 4, wobei innerhalb der zweiten oberen Gesenkhälfte (33) und der zweiten unteren Gesenkhälfte (23) R-Abschnitte (gerundete Abschnitte) (23-1, 33-1) zum Fertigschmieden ausgebildet sind, um eine Ecke des Blocks abzurunden.

Revendications

1. Procédé de forgeage comprenant:

   une étape de forgeage en matrice complètement fermée pour obtenir un profil formé (51) ayant une portion concave (51-2) à au moins une extrémité de celui-ci, en appliquant une pression à un profil préformé en forme de tige (51A) à l'aide d'une première demi-matrice supérieure (31) et d'une première demi-matrice inférieure (21) selon la direction perpendiculaire à la direction axiale dudit profil, et avec au moins un poinçon horizontal (44) selon la direction axiale dudit profil;
   une étape de forgeage final pour appliquer une pression audit profil formé (51B) à l'aide d'une seconde demi-matrice supérieure (33) et d'une seconde demi-matrice inférieure (23) selon la direction perpendiculaire à la direction axiale dudit profil formé pour produire un profil irrégulier (51C); et
   une étape d'ébardage pour éliminer une bavure (51-5) dudit profil irrégulier.

2. Procédé de forgeage selon la revendication 1, dans lequel on effectue une étape de forgeage en matrice scellé entre ladite étape de forgeage en matrice complètement fermée et ladite étape de forgeage finale, pour le forgeage d'ébauche en appliquant une pression audit profil formé (51B) obtenu au cours de ladite étape de forgeage en matrice complètement fermée, l'application de la pression étant effectuée à l'aide d'une troisième demi-matrice supérieure et d'une troisième demi-matrice inférieure

(22) selon la direction perpendiculaire à la direction axiale dudit profil.

3. Machine de forgeage comprenant:
un support de matrice supérieure (30) et un support de matrice inférieure (20), ledit support de matrice supérieur (30) ayant une première demi-matrice supérieure (31) pour le forgeage à matrice complètement fermée, une deuxième demi-matrice supérieure (33) pour le forgeage final, et une troisième demi-matrice supérieure pour l'ébardage, qui sont placées dans cet ordre, ledit support de matrice inférieur (20) ayant une première demi-matrice inférieure (21) pour ledit forgeage en matrice complètement fermée, une deuxième demi-matrice inférieure (23) pour ledit forgeage final, et une troisième demi-matrice inférieure (24) pour ledit ébardage, qui sont placées dans cet ordre; et un mécanisme opérationnel à poinçon horizontal (41, 42, 43, 44, 45) avec au moins un poinçon est fourni à l'endroit où la première demi-matrice inférieure (21) pour ledit forgeage en matrice complètement fermée est située, ledit mécanisme opérationnel à poinçon horizontal (41, 42, 43, 44, 45) étant prévu pour presser ledit au moins un poinçon horizontal (44) dans un profil maintenu par lesdites demi-matrices supérieure (31) et inférieure (21).

4. Machine de forgeage selon la revendication 3, dans laquelle ledit support de matrice supérieur (30) possède une demi-matrice supérieure pour ledit forgeage en matrice scellée, entre ladite première demi-matrice supérieure et ladite deuxième demi-matrice supérieure, et dans laquelle ledit support de matrice inférieur (20) possède une demi-matrice inférieure (22) pour ledit forgeage en matrice scellée, entre ladite première demi-matrice inférieure et ladite deuxième demi-matrice inférieure.

5. Machine de forgeage selon la revendication 4, dans laquelle des parties R (23-1, 33-1) sont formées à l'intérieur de ladite deuxième demi-matrice supérieure (33) et ladite deuxième demi-matrice inférieure (23) pour ledit forgeage final afin d'arrondir un coin dudit profil.

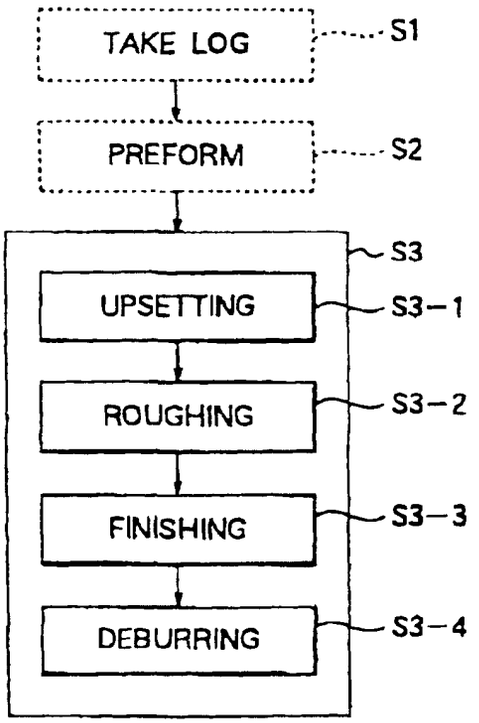

FIG. 1
PRIOR ART

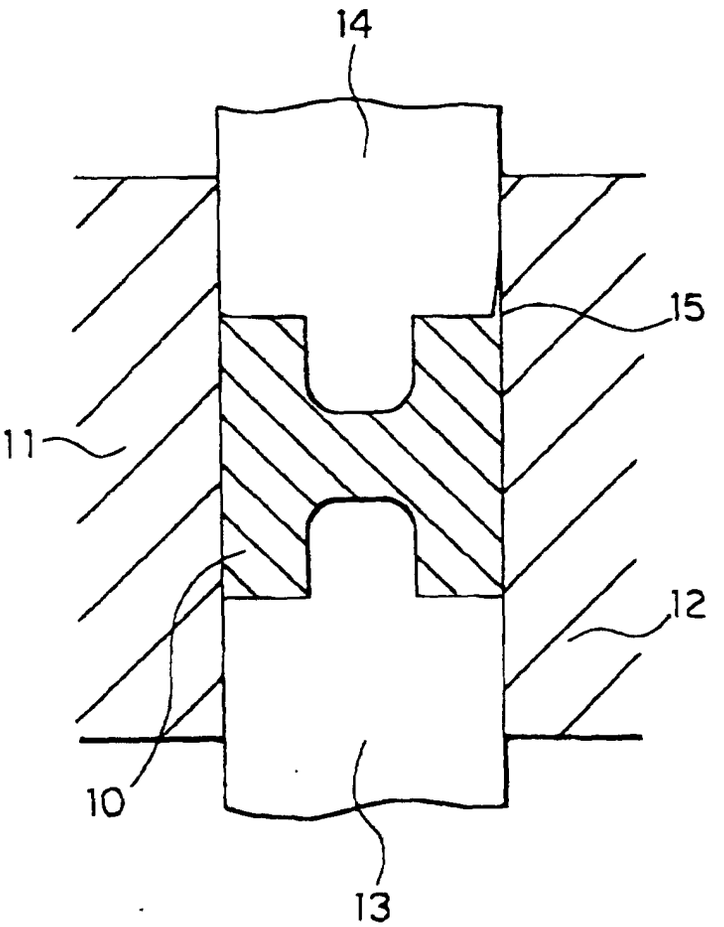

FIG. 2 PRIOR ART

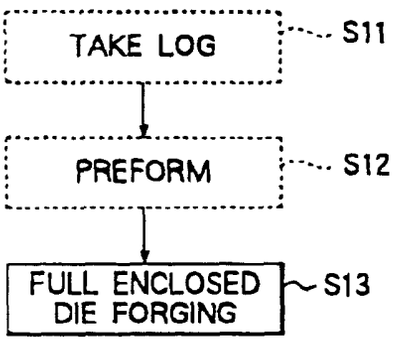

FIG. 3

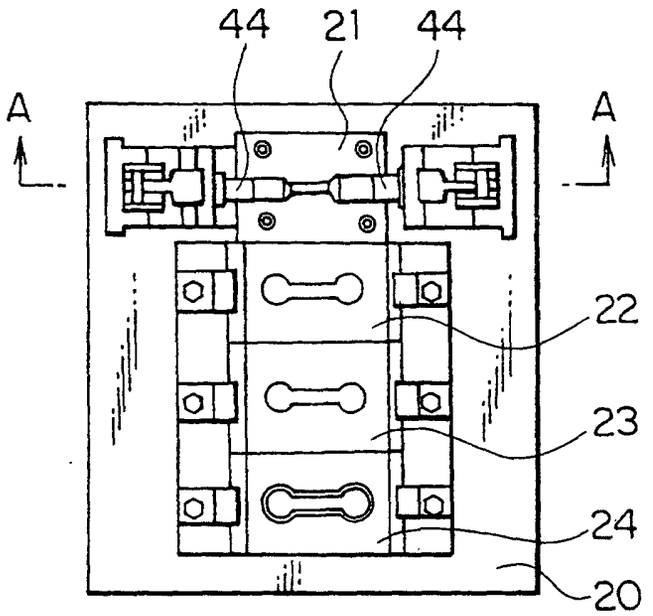
44
21
44
A
A
22
23
24
20

FIG. 4

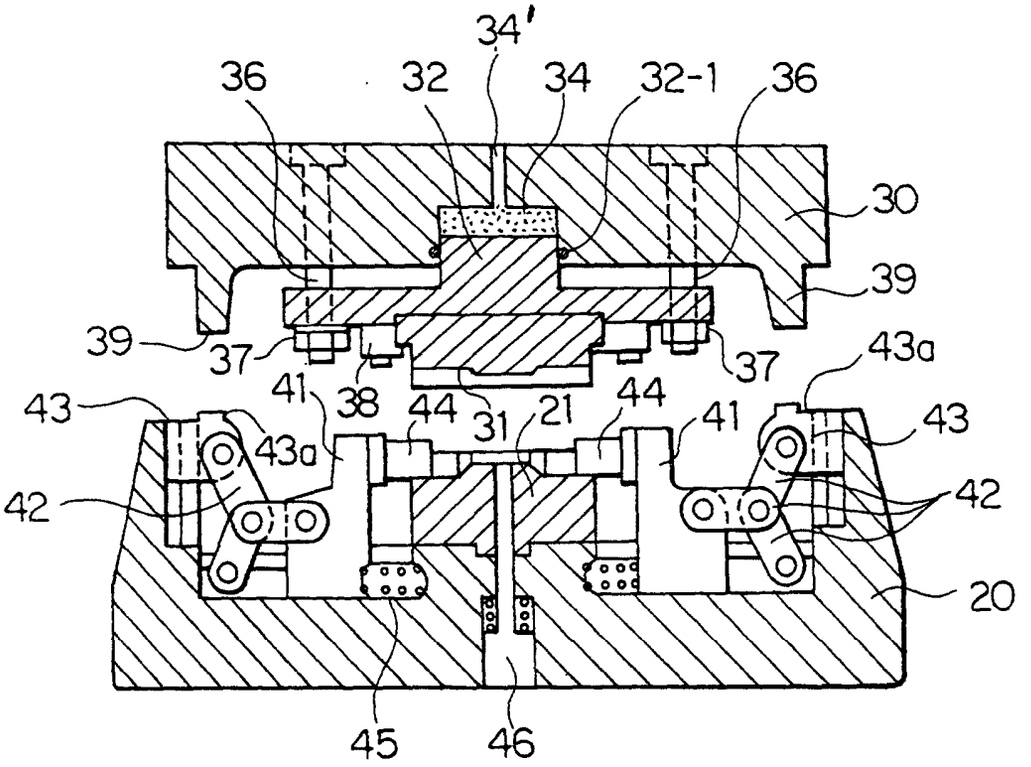
34'
36
32
34
32-1
36
30
39
39
37
37
43a
41
38
44
31
21
44
41
43
43
43a
42
42
20
45
46

FIG. 5

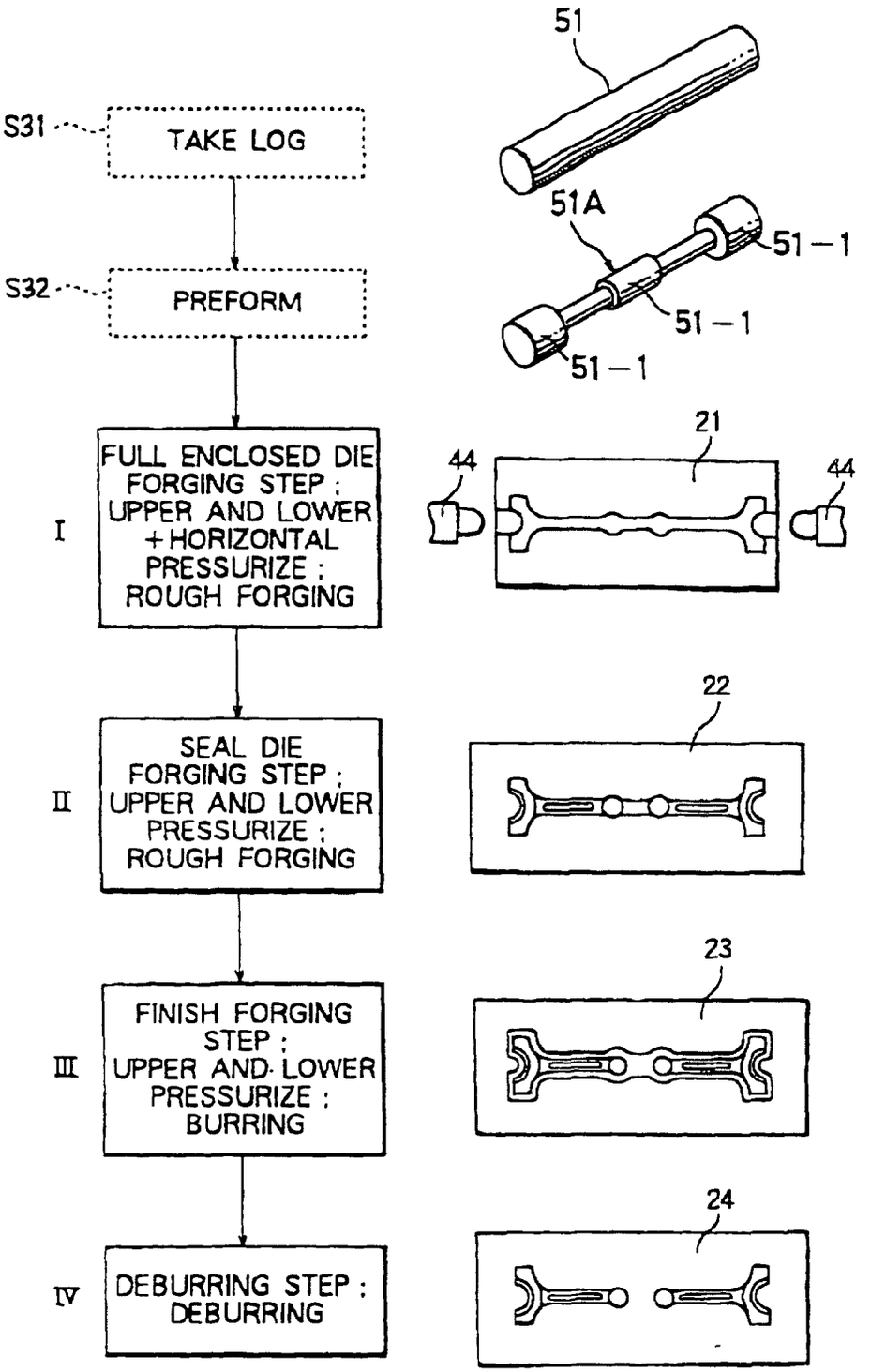
S31
TAKE LOG
S32
PREFORM
I
FULL ENCLOSED DIE FORGING STEP : UPPER AND LOWER + HORIZONTAL PRESSURIZE : ROUGH FORGING
II
SEAL DIE FORGING STEP : UPPER AND LOWER PRESSURIZE : ROUGH FORGING
III
FINISH FORGING STEP : UPPER AND LOWER PRESSURIZE : BURRING
IV
DEBURRING STEP : DEBURRING
51
51A
51-1
51-1
51-1
21
44
44
22
23
24

FIG. 6

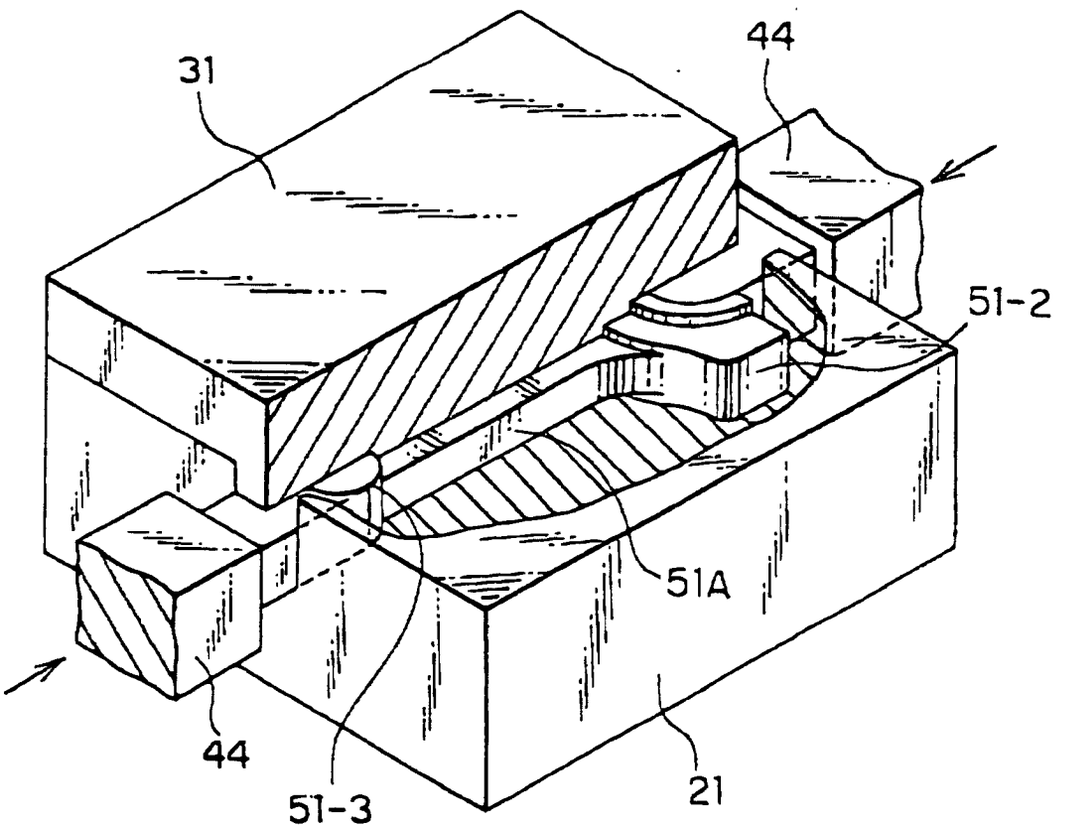

FIG. 7

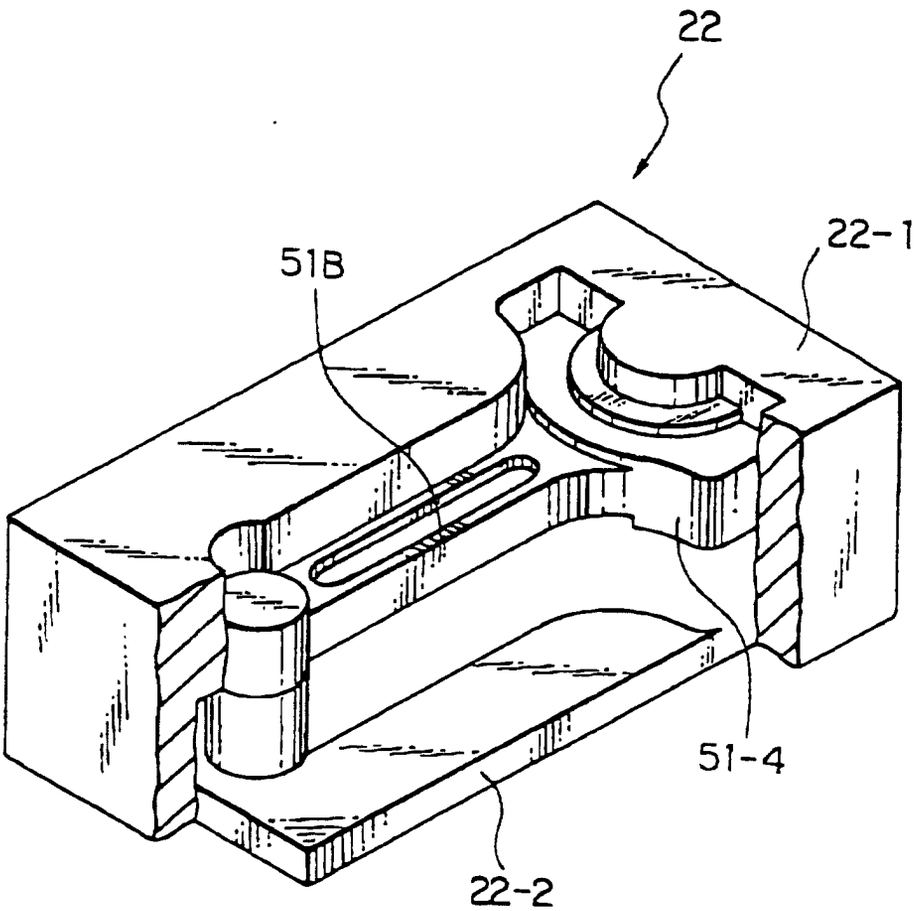

FIG. 8

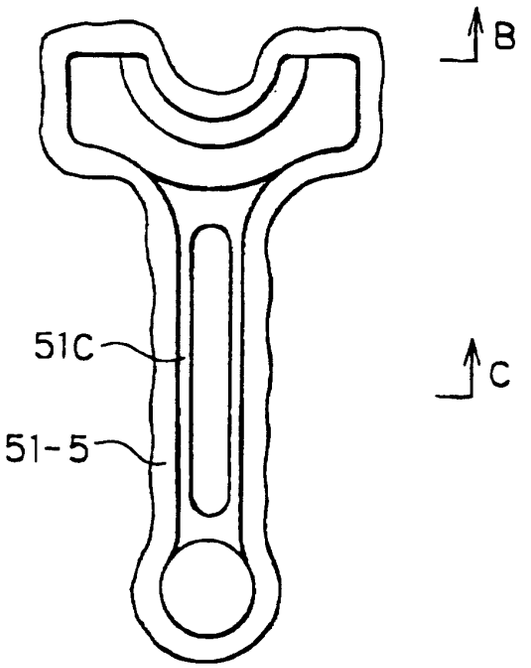

FIG. 9

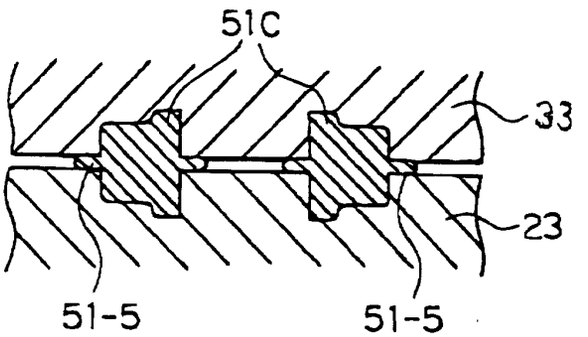

FIG. 10

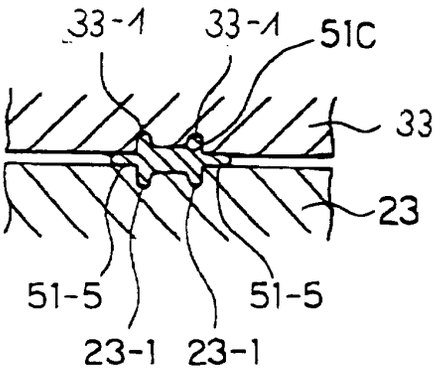

FIG. 11