1,511,127

C. HERMANN

RADIO COUPLER CONSTRUCTION

Filed Sept. 19, 1923

Fig. 1.

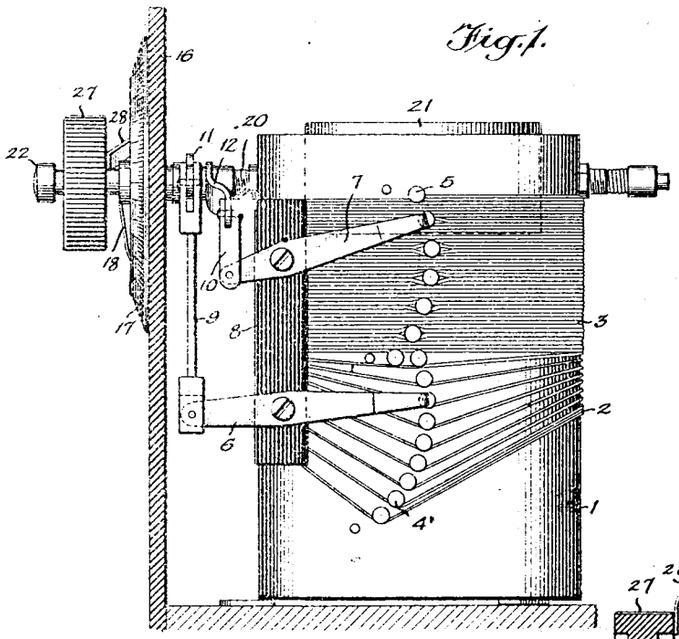

Fig. 3.

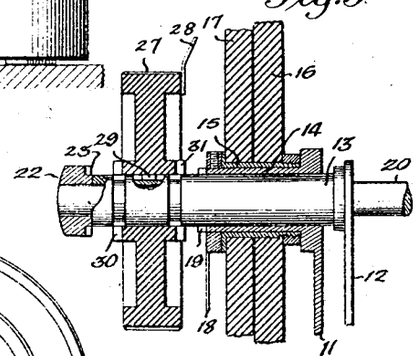

Fig. 2.

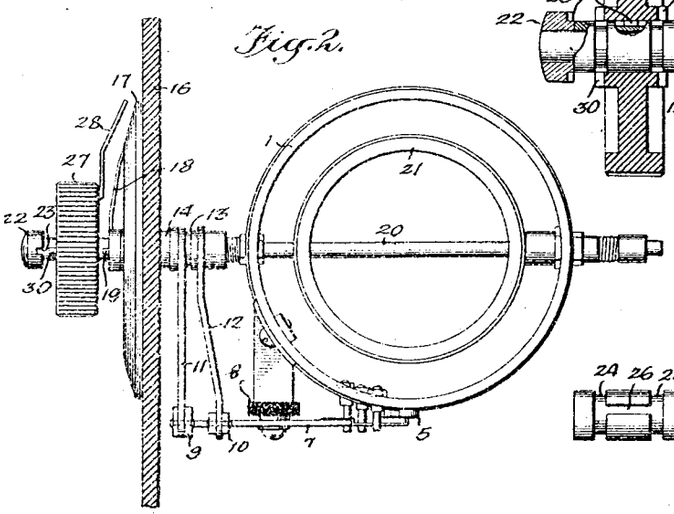

Fig. 4.

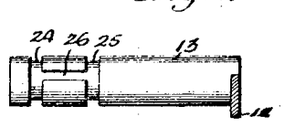

WITNESSES

Geo. W. Naylor

Robert I. Hoxbaizer

INVENTOR

CHARLES HERMANN

BY Munn & Co

ATTORNEYS

Patented Oct. 7, 1924. 1,511,127

UNITED STATES PATENT OFFICE.

CHARLES HERMANN, OF BINGHAMTON, NEW YORK.

RADIO COUPLER CONSTRUCTION.

Application filed September 19, 1923. Serial No. 663,608.

To all whom it may concern:

Be it known that I, CHARLES HERMANN, a subject of the King of Rumania, and a resident of Binghamton, in the county of Broome and State of New York, have invented a new and Improved Radio Coupler Construction, of which the following is a full, clear, and exact description.

This invention relates to a radio coupler construction, and an object of the invention is to provide a coupler construction in which one or more switches connected to the various tapped coils of the coupler can be operated by the manipulation of a single knob associated with a shaft, so that the manipulation of this single knob cannot only effect the adjustment of the switches but also the rotor of the coupler.

Another object concerns the provision of means whereby the operation of a multiplicity of switches back of the panelboard is not only effected by the manipulation of a single element but the design of the apparatus is so arranged that a minimum of space, both in front and back of the panelboard is occupied by the various parts.

The invention is illustrated in the drawings, of which—

Figure 1 is a side view of the apparatus;

Fig. 2 is a plan view;

Fig. 3 is a section through the knob and operating sleeves and shafts; and

Fig. 4 is a detail elevation of one of the sleeves.

In operating radio sets in which couplers are used with tapped coils, it has been generally necessary to provide connections from the various taps to the front of the panelboard to contact pieces, and to have a set of these contacts and a switch for each coil, this necessitating not only the laborious effort of making the proper connections and soldering the connections, but it also required a multiplicity of apparatus which occupied a considerable space on the board and, therefore, required much larger panelboards than might otherwise have been the case. Therefore, I have endeavored to overcome this difficulty by providing a plurality of sleeves mounted on the shaft of a rotor of the coupler. These sleeves are associated with the shaft and with a slidable knob disposed in front of the panelboard, and the sleeves, shafts and knob are provided with clutch elements so that the movement of the knob with respect to the sleeves and the shaft will selectively effect the engagement of the knob with the shaft or either one of the sleeves, so that the rotation of the knob in its selective position will operate either the rotor of the coupler or switch members engaging with the taps on the various coils of the coupler. In view of the fact that this single knob, by being moved from one position to another on a single shaft, can selectively operate any one of a plurality of devices, it requires no more space on a panelboard than would be required of a single knob operating one element. In view of these facts it will be apparent that a considerable advance has been made in the multiple operation of a plurality of coupler elements by a single knob, not only saving time and space on a panelboard but making the operation of the system considerably simpler, so that the system can be tuned quicker by one familiar with the operation.

As shown in the drawings, the invention comprises the usual shell 1 on which a pair of windings such as 2 and 3 are disposed, these windings being provided respectively with sets of contacts such as 4 and 5 with which switch members such as 6 and 7 are respectively adapted to engage. These switch members are mounted on an insulating strip or plug 8 in any suitable manner for pivotal movement thereon. These switch members are connected by links 9 and 10, respectively, to arms 11 and 12, the connection between these links and switch members or levers and arms being pivotal connections. The arm 12 is rigidly connected to the end of a sleeve 13. The arm 11 is rigidly connected to the end of a sleeve 14, which sleeve 14 is rotatable around the sleeve 13. The sleeve 14 is surrounded by a bushing sleeve 15 suitably clamped or disposed within an aperture in the panelboard or support 16 on the face of which a dial or other suitable indicating plate 17 is fastened. The front end of sleeve 14 is provided with a pointer such as 18 as well as with clutch elements such as 19 (see Fig. 3). A shaft 20 is rotatable within the sleeve 13. On one end of this shaft a rotor member 21 (see Fig. 1) is mounted in a well known manner. The other end of this shaft is provided with a head 22 having on its rear face clutch elements 23.

The forward end of the sleeve 13 is provided, as shown in Fig. 4, with circular transverse grooves, such as 24 and 25 and a longitudinal groove 26 which extends between the two transverse grooves. Around this portion of the sleeve a knob element 27 is disposed, this knob being provided with an indicator or pointer 28. These pointers 18 and 28 can be disposed relative to indications which may be formed on the dial 17, so that the relative position of the pointer with respect to the dial can be observed at all times. The inner face of the head of the knob 27 is provided with a key or pin 29 projecting inwardly therefrom. The front and rear faces of the knob are also provided with clutch elements such as 30 and 31. The clutch elements 30 on this knob are adapted when the knob is slid forward to engage with the clutch elements 23 on the head 22, whereby the rotation of the knob will effect the rotation of the shaft 20 and thereby the rotation of the rotor 21.

The clutch elements 31 on the rear face of the knob engage the clutch elements 19 on the front end of sleeve 14 whenever the knob is moved to the rear, so that the sleeve 14 can be rotated and thereby the arm 11 and the switch lever 6, which can, therefore, be adjusted over the taps 4 of the coil 2. It will be observed that in the extreme forward and rear positions of the knob the pin or key 29, as the knob is rotated, will move in the transverse slots 24 and 25, whereas when the knob is in the mid position, as shown in Fig. 3, the key 29 will lie in the longitudinal groove 26, and in this position of the key it will act with the sides of the groove 26 in the manner of a clutch, so that the rotation of the knob will effect the rotation of the sleeve 13 and thereby the movement of the arm 12 and switch lever 7 over the contacts 5 of the coil 3.

It will, therefore, be observed that by sliding the single element or knob 27 forward or back to the extreme positions, or by manipulating in the intermediate position, the actuation of three distinct elements associated with the coupler can be brought about. The knob and its co-operating shaft and sleeves occupy substantially no more space on the panelboard than would one shaft and its knob rigidly connected. In this manner, therefore, by the establishment of connections from the various parts of the coil to sets of contacts on the front of the panelboard, the space of these contacts separately and the provision of them with separate switches and the soldering of all connections are entirely eliminated. The coil can be tapped and the contacts formed thereon in an entirely separate, independent operation before the coils and their shell are mounted on the set. It is obvious that the extreme efficiency and simplicity of this device and the great amount of space saved on the panelboard, and the comparative ease with which the multiplicity of parts can be operated by one single element, make this device one which has great advantage over those now in use

What I claim is:—

1. A radio coupler construction which includes a shell, a coil on said shell, a plurality of contacts on said shell connecting to different windings of said coil, a switch member movable over said contacts, a rotor disposed to be moved relative to said shell, a shaft on which said rotor is mounted, a sleeve embracing said shaft, a linkage connecting the sleeve with said switch member, a knob mounted on said shaft and slidable therealong, clutch members on said knob, and clutch members on the sleeve and the shaft to be selectively engaged by the knob whereby the rotor and the switch member can be selectively and independently operated by the one knob.

2. A radio coupler construction which includes a shell, a coil on said shell, a plurality of contacts on said shell connecting to different windings of said coil, a switch member movable over said contacts, a rotor disposed to be moved relative to said shell, a shaft on which said rotor is mounted, a sleeve embracing said shaft, a linkage connecting the sleeve with said switch member, a knob mounted on said shaft and slidable therealong, clutch members on said knob, clutch members on the sleeve and the shaft to be selectively engaged by the knob whereby the rotor and the switch member can be selectively and independently operated by the one knob, a second coil on said shell, a second switch member movable over said coil, a second sleeve associated with the shaft and said first sleeve, linkage connecting said second sleeve with said second switch member, clutch elements on said second sleeve, and additional clutch elements on the knob to engage with said second sleeve whereby can be selectively and independently o erated to cause the selective and independent operation of the second switch member.

3. A radio coupler construction which includes a rotor, a shaft on which said rotor is mounted, a plurality of switch members, a plurality of sleeves embracing said shaft and disposed for relative rotation thereon and with respect to each other, linkages connecting said sleeves with said switch members, a knob mounted for rotation and for sliding movement with respect to said shaft and said sleeves, said knob embracing said shaft, clutch elements on said sleeves and on said shaft, and clutch elements on said knob whereby the selective sliding movement of the knob with respect to the sleeves and the shaft will permit the inde-

pendent and selective rotation of either the shaft or one of said plurality of sleeves at the will of the manipulator.

4. A radio coupler construction which comprises a rotor shaft extending through a panelboard, a pair of sleeves embracing said shaft and independently rotatable with respect to each other and said shaft, a knob slidable on one of said sleeves and around said shaft, clutch elements on said shaft and said sleeves, and clutch elements on said knob whereby the longitudinal movement of the knob with respect to the shaft and sleeves will selectively and independently engage the clutch elements thereon with the clutch elements on the shaft or the sleeves for the selective and independent rotation thereof.

CHARLES HERMANN.