(12) INTERNATIONAL APPLICATION PUBLISHED UNDER THE PATENT COOPERATION TREATY (PCT)

(19) World Intellectual Property Organization
International Bureau

(43) International Publication Date
21 June 2018 (21.06.2018)

WIPO | PCT

(10) International Publication Number
WO 2018/111438 A1

(51) International Patent Classification:
B22C 9/24 (2006.01) *B22C 9/08* (2006.01)
B22C 9/04 (2006.01)

(21) International Application Number:
PCT/US2017/060165

(22) International Filing Date:
06 November 2017 (06.11.2017)

(25) Filing Language: English

(26) Publication Language: English

(30) Priority Data:
15/377,759 13 December 2016 (13.12.2016) US

(71) Applicant: **GENERAL ELECTRIC COMPANY** [US/US]; 1 River Road, Schenectady, NY 12345 (US).

(72) Inventors: **YANG, Xi**; 2060 Heller Road, Alpha, OH 45301 (US). **DEINES, James, Herbert**; 1 Neumann Way, Cincinnati, OH 45215 (US). **MCCARREN, Michael, John**; 2060 Hellen Road, Alpha, OH 453012 (US). **PRZESLAWSKI, Brian, David**; 1 Neumann Way, Cincinnati, OH 45215 (US). **PETERSON, Brian, Patrick**; 2060 Heller Drive, Alpha, OH 45301 (US). **GARAY, Gregory, Terrence**; 1 Neumann Way, Mail Drop W300, Cincinnati, OH 45215 (US).

(74) Agent: **OVERBECK, Brian, P.** et al.; General Electric Company, Global Patent Operation, 901 Main Avenue, 3rd Floor, Norwalk, CT 06851 (US).

(81) Designated States *(unless otherwise indicated, for every kind of national protection available)*: AE, AG, AL, AM, AO, AT, AU, AZ, BA, BB, BG, BH, BN, BR, BW, BY, BZ, CA, CH, CL, CN, CO, CR, CU, CZ, DE, DJ, DK, DM, DO, DZ, EC, EE, EG, ES, FI, GB, GD, GE, GH, GM, GT, HN, HR, HU, ID, IL, IN, IR, IS, JO, JP, KE, KG, KH, KN, KP, KR, KW, KZ, LA, LC, LK, LR, LS, LU, LY, MA, MD, ME, MG, MK, MN, MW, MX, MY, MZ, NA, NG, NI, NO, NZ, OM, PA, PE, PG, PH, PL, PT, QA, RO, RS, RU, RW, SA, SC, SD, SE, SG, SK, SL, SM, ST, SV, SY, TH, TJ, TM, TN, TR, TT, TZ, UA, UG, US, UZ, VC, VN, ZA, ZM, ZW.

(84) Designated States *(unless otherwise indicated, for every kind of regional protection available)*: ARIPO (BW, GH,

(54) Title: INTEGRATED CASTING CORE-SHELL STRUCTURE AND FILTER FOR MAKING CAST COMPONENT

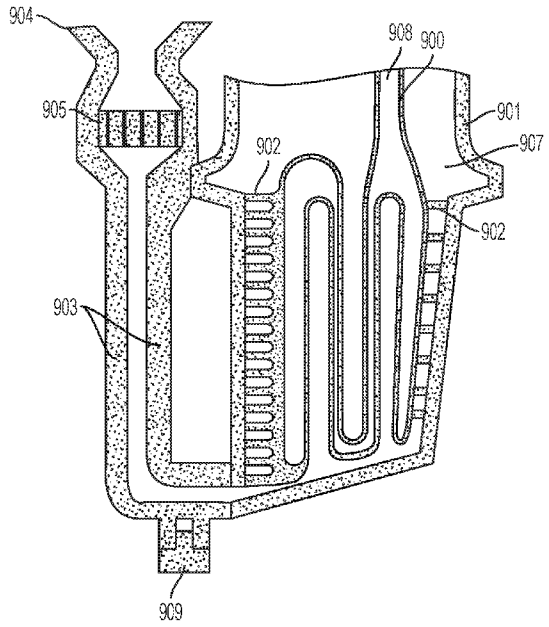

FIG. 9

(57) Abstract: The present disclosure generally relates to integrated core-shell investment casting molds that provide an integrated ceramic filter. These integrated core-shell investment casting molds also provide filament structures corresponding to cooling hole patterns on the surface of the turbine blade or stator vane, which provide a leaching pathway for the core portion after metal casting. The invention also relates to core filaments that can be used to supplement the leaching pathway, for example in a core tip portion of the mold.

WO 2018/111438 A1

[Continued on next page]

GM, KE, LR, LS, MW, MZ, NA, RW, SD, SL, ST, SZ, TZ, UG, ZM, ZW), Eurasian (AM, AZ, BY, KG, KZ, RU, TJ, TM), European (AL, AT, BE, BG, CH, CY, CZ, DE, DK, EE, ES, FI, FR, GB, GR, HR, HU, IE, IS, IT, LT, LU, LV, MC, MK, MT, NL, NO, PL, PT, RO, RS, SE, SI, SK, SM, TR), OAPI (BF, BJ, CF, CG, CI, CM, GA, GN, GQ, GW, KM, ML, MR, NE, SN, TD, TG).

Declarations under Rule 4.17:

— *as to applicant's entitlement to apply for and be granted a patent (Rule 4.17(ii))*

— *as to the applicant's entitlement to claim the priority of the earlier application (Rule 4.17(iii))*

Published:

— *with international search report (Art. 21(3))*

INTEGRATED CASTING CORE-SHELL STRUCTURE AND FILTER FOR MAKING CAST COMPONENT

INTRODUCTION

[0001] The present disclosure generally relates to investment casting integrated core-shell molds and processes utilizing these integrated molds. The core-shell molds made in accordance with the present invention includes integrated ceramic filters for filtering molten metal upon addition to the mold. These core-shell molds also include integrated ceramic filaments between the core and shell of the mold that can be utilized to form holes, i.e., effusion cooling holes, in the cast component made from these molds. The integrated core-shell molds provide useful properties in casting operations, such as in the casting of superalloys used to make turbine blades and stator vanes for jet aircraft engines or power generation turbine components.

BACKGROUND

[0002] Many modern engines and next generation turbine engines require components and parts having intricate and complex geometries, which require new types of materials and manufacturing techniques. Conventional techniques for manufacturing engine parts and components involve the laborious process of investment or lost-wax casting. One example of investment casting involves the manufacture of a typical rotor blade used in a gas turbine engine. A turbine blade typically includes hollow airfoils that have radial channels extending along the span of a blade having at least one or more inlets for receiving pressurized cooling air during operation in the engine. The various cooling passages in a blade typically include a serpentine channel disposed in the middle of the airfoil between the leading and trailing edges. The airfoil typically includes inlets extending through the blade for receiving pressurized cooling air, which include local features such as short turbulator ribs or pins for increasing the heat transfer between the heated sidewalls of the airfoil and the internal cooling air.

[0003] The manufacture of these turbine blades, typically from high strength, superalloy metal materials, involves numerous steps shown in FIG. 1. First, a precision ceramic core is manufactured to conform to the intricate cooling passages desired inside the turbine blade. A precision die or mold is also created which defines the precise 3-D external surface of the

turbine blade including its airfoil, platform, and integral dovetail. A schematic view of such a mold structure is shown in FIGS. 2A-2C. The ceramic core 200 is assembled inside two die halves which form a space or void therebetween that defines the resulting metal portions of the turbine blade. Wax is injected into the assembled dies to fill the void and surround the ceramic core encapsulated therein. The two die halves are split apart and removed from the molded wax. The molded wax has the precise configuration of the desired turbine blade. The molded wax blade 201 with encapsulated ceramic core 200 is then attached to a wax tree structure 202 that will ultimately define a flowpath for molten metal into the ceramic mold. The wax blade includes pins 205 for holding the core in place. The tree structure 202 may include a funnel shaped portion 204 for adding molten metal to the mold. As shown in FIG. 2A, the tree structure 202 includes a ceramic filter 203 for filtration of molten metal in the casting operation.

[0004] The ceramic filters known in the art include ceramic foam filters (CFF) as shown in FIG. 2D. These filters are formed by impregnating reticulated polyurethane foam with ceramic slip, removing the excess slip by squeezing the foam, and then drying and firing the body forming a CFF. Other known ceramic filters include symmetric filters such as the standard flat primary filter shown in FIG. 2E. More recently, ceramic filters have been made using various additive technologies. For example, U.S. Patent Application Pub. No. 2016/0038866 A1 entitled "ceramic filters" describes an additively manufactured ceramic filter. Another example is "Advanced Filtration to Improve Single Crystal Casting Yield—Mikro Systems," available at the National Energy Technology Laboratory (NETL) website. These filters are sold as stand-alone filters that may be incorporated in the wax tree as shown in FIG. 2A, and then incorporated into the ceramic mold as shown in FIG. 2B.

[0005] After wax injection, the entire wax tree structure 202, ceramic filter 203, and wax turbine blade 201 is then coated with a ceramic material to form a ceramic shell 206 as shown in FIG. 2B. Then, the wax is melted and removed from the shell 206 leaving a corresponding void or space 207 between the ceramic shell 206 and the internal ceramic core 200. The ceramic core is held in place after the wax is removed by pins 205. As shown in FIG. 2C, molten superalloy metal 208 is then poured into the shell to fill the void 207 therein and again encapsulate the ceramic core 202 contained in the shell 206. The molten metal is cooled and

solidifies, and then the external shell 206 and internal core 202 are suitably removed leaving behind the desired metallic turbine blade.

[0006] The cast turbine blade may then undergo additional post-casting modifications, such as but not limited to drilling of suitable rows of film cooling holes through the sidewalls of the airfoil as desired for providing outlets for the internally channeled cooling air which then forms a protective cooling air film or blanket over the external surface of the airfoil during operation in the gas turbine engine. However, these post-casting modifications are limited and given the ever increasing complexity of turbine engines and the recognized efficiencies of certain cooling circuits inside turbine blades, more complicated and intricate internal geometries are required. While investment casting is capable of manufacturing these parts, positional precision and intricate internal geometries become more complex to manufacture using these conventional manufacturing processes. Accordingly, it is desired to provide an improved casting method for three dimensional components having intricate internal voids.

[0007] Methods for using 3-D printing to produce a ceramic core-shell mold are described in U.S. Patent No. 8,851,151 assigned to Rolls-Royce Corporation. The methods for making the molds include powder bed ceramic processes such as disclosed U.S. Patent No. 5,387,380 assigned to Massachusetts Institute of Technology, and selective laser activation (SLA) such as disclosed in U.S. Patent No. 5,256,340 assigned to 3D Systems, Inc. The ceramic core-shell molds according to the '151 patent are limited by the printing resolution capabilities of these processes. As shown in FIG. 3, the core portion 301 and shell portion 302 of the integrated core-shell mold is held together via a series of tie structures 303 provided at the bottom edge of the mold. Cooling passages are proposed in the '151 patent that include staggered vertical cavities joined by short cylinders, the length of which is nearly the same as its diameter. A superalloy turbine blade is then formed in the integrated core-shell mold using known techniques disclosed in the '151 patent, which are incorporated herein by reference. After a turbine blade is cast in one of these core-shell molds, the mold is removed to reveal a cast superalloy turbine blade.

[0008] There remains a need to prepare ceramic core-shell molds produced using higher resolution methods that are capable of providing fine detail cast features in the end-product of the casting process.

SUMMARY

[0009] In one embodiment, the invention relates to a method for fabricating a ceramic mold, comprising: (a) contacting a cured portion of a workpiece with a liquid ceramic photopolymer; (b) irradiating a portion of the liquid ceramic photopolymer adjacent to the cured portion through a window contacting the liquid ceramic photopolymer; (c) removing the workpiece from the uncured liquid ceramic photopolymer; and (d) repeating steps (a) – (c) until a ceramic mold is formed, the ceramic mold comprising a core portion, a shell portion, and a filter portion with at least one cavity between the core portion and the shell portion, the cavity adapted to define the shape of a cast component upon casting and removal of the ceramic mold and the filter portion oriented in the path of molten metal flowing into the cavity of the mold. The process further includes, after step (d), a step (e) comprising pouring a liquid metal into a casting mold and solidifying the liquid metal to form the cast component. After step (e), a step (f) including removing the mold from the cast component may be performed.

[0010] In another embodiment, the invention also relates to a method of preparing a cast component comprising pouring a liquid metal into a ceramic casting mold and solidifying the liquid metal to form the cast component, the ceramic casting mold comprising a core portion, a shell portion, and a filter portion with at least one cavity between the core portion and the shell portion, the cavity adapted to define the shape of a cast component upon casting and removal of the ceramic mold and the filter portion oriented in the path of molten metal flowing into the cavity of the mold, the ceramic casting mold further comprising a plurality of ceramic filaments joining the core portion and shell portion; and removing the ceramic casting mold from the cast component by leaching at least a portion of the ceramic core through the holes in the cast component provided by the filaments.

[0011] In one aspect, the cast component is a turbine blade or a stator vane. Preferably the turbine blade or stator vane is used in a gas turbine engine in, for example, an aircraft engine or power generation. The turbine blade is preferably a single crystal cast turbine blade having a cooling hole pattern defined by the ceramic filaments mentioned above. Preferably, the filaments join the core portion and shell portion where each filament spans between the core and shell, the filaments having a cross sectional area ranging from 0.01 to 2 mm^2.

[0012] In another embodiment, the invention relates to a ceramic casting mold comprising including a core portion, a shell portion, and a filter portion with at least one cavity between the core portion and the shell portion, the cavity adapted to define the shape of a cast component upon casting and removal of the ceramic mold and the filter portion oriented in the path of molten metal flowing into the cavity of the mold; and a plurality of filaments joining the core portion and shell portion. where each filament spans between the core and shell, the filaments adapted to define a plurality of holes providing fluid communication between a cavity within the cast component defined by the core portion and an outer surface of the cast component upon removal of the mold. Preferably, the cast component is a turbine blade or stator vane and the plurality of filaments joining the core portion and shell portion define a plurality of cooling holes in the turbine blade upon removal of the mold. The plurality of filaments joining the core portion and shell portion have a cross sectional area ranging from 0.01 to 2 mm^2. The ceramic may be a photopolymerized ceramic or a cured photopolymerized ceramic.

BRIEF DESCRIPTION OF THE DRAWINGS

[0013] FIG. 1 is a flow diagram showing the steps for conventional investment casting.

[0014] FIG. 2A is a schematic diagram showing a conventional ceramic mold attached to a wax tree structure for investment casting of a turbine blade.

[0015] FIG. 2B is a schematic diagram showing the conventional ceramic mold of FIG. 2A after the wax has been removed.

[0016] FIG. 2C is a schematic diagram showing the conventional ceramic mold of FIG. 2A after molten metal is poured into the mold.

[0017] FIG. 2D is a conventional ceramic foam filter.

[0018] FIG. 2E is a conventional ceramic flat primary filter.

[0019] FIG. 3 shows a perspective view of a prior art integrated core-shell mold with ties connecting the core and shell portions.

[0020] FIGS. 4, 5, 6 and 7 show schematic lateral sectional views of a device for carrying out successive phases of the method sequence for direct light processing (DLP).

[0021] FIG. 8 shows a schematic sectional view along the line A-A of FIG. 7.

[0022] FIG. 9 shows a side view of a core-shell mold including an integrated ceramic filter.

[0023] FIG. 10 shows the integrated filter of FIG. 9 after molten metal has been added to the filter.

[0024] FIG. 11 shows a turbine blade produced using the integrated filter of FIG. 9.

[0025] FIG. 12 shows a cross-section of a multiple blade ceramic mold tree where multiple blades share a common ceramic filter.

DETAILED DESCRIPTION

[0026] The detailed description set forth below in connection with the appended drawings is intended as a description of various configurations and is not intended to represent the only configurations in which the concepts described herein may be practiced. The detailed description includes specific details for the purpose of providing a thorough understanding of various concepts. However, it will be apparent to those skilled in the art that these concepts may be practiced without these specific details. For example, the present invention provides a preferred method for making cast metal parts, and preferably those cast metal parts used in the manufacture of jet aircraft engines. Specifically, the production of single crystal, nickel-based superalloy cast parts such as turbine blades, vanes, and shroud components can be advantageously produced in accordance with this invention. However, other cast metal components may be prepared using the techniques and integrated ceramic molds of the present invention.

[0027] The present inventors recognized that prior processes known for making integrated core-shell molds lacked the fine resolution capability necessary to print filaments extending between the core and shell portion of the mold of sufficiently small size and quantity to result in effusion cooling holes in the finished turbine blade. In the case of earlier powder bed processes, such as disclosed in U.S. Patent No. 5,387,380 assigned to Massachusetts Institute of Technology, the action of the powder bed recoater arm precludes formation of sufficiently fine filaments extending between the core and shell to provide an effusion cooling hole pattern in the cast part. Other known techniques such as selective laser activation (SLA) such as disclosed in U.S. Patent No. 5,256,340 assigned to 3D Systems, Inc. that employ a top-down irradiation technique may be utilized in producing an integrated core-

shell mold in accordance with the present invention. However, the available printing resolution of these systems significantly limit the ability to make filaments of sufficiently small size to serve as effective cooling holes in the cast final product.

[0028] The present inventors have found that the integrated core-shell mold of the present invention can be manufactured using direct light processing (DLP). DLP differs from the above discussed powder bed and SLA processes in that the light curing of the polymer occurs through a window at the bottom of a resin tank that projects light upon a build platform that is raised as the process is conducted. With DLP an entire layer of cured polymer is produced simultaneously, and the need to scan a pattern using a laser is eliminated. Further, the polymerization occurs between the underlying window and the last cured layer of the object being built. The underlying window provides support allowing thin filaments of material to be produced without the need for a separate support structure. In other words, producing a thin filament of material bridging two portions of the build object is difficult and was typically avoided in the prior art. For example, the '151 patent discussed above in the background section of this application used vertical plate structures connected with short cylinders, the length of which was on the order of their diameter. Staggered vertical cavities are necessitated by the fact that the powder bed and SLA techniques disclosed in the '151 patent require vertically supported ceramic structures and the techniques are incapable of reliably producing filaments. In addition, the available resolution within a powder bed is on the order of 1/8" making the production of traditional cooling holes impracticable. For example, round cooling holes generally have a diameter of less than 2 mm corresponding to a cooling hole area below 3.2 mm^2. Production of a hole of such dimensions requires a resolution far below the size of the actual hole given the need to produce the hole from several voxels. This resolution is simply not available in a powder bed process. Similarly, stereolithography is limited in its ability to produce such filaments due lack of support and resolution problems associated with laser scattering. But the fact that DLP exposes the entire length of the filament and supports it between the window and the build plate enables producing sufficiently thin filaments spanning the entire length between the core and shell to form a ceramic object having the desired cooling hole pattern. Although powder bed and SLA may be used to produce filaments, their ability to produce sufficiently fine filaments as discussed above is limited.

[0029] One suitable DLP process is disclosed in U.S. Patent No. 9,079,357 assigned to Ivoclar Vivadent AG and Technische Universitat Wien, as well as WO 2010/045950 A1 and US 2011310370, each of which are hereby incorporated by reference and discussed below with reference to FIGS. 4-8. The apparatus includes a tank 404 having at least one translucent bottom portion 406 covering at least a portion of the exposure unit 410. The exposure unit 410 comprises a light source and modulator with which the intensity can be adjusted position-selectively under the control of a control unit, in order to produce an exposure field on the tank bottom 406 with the geometry desired for the layer currently to be formed. As an alternative, a laser may be used in the exposure unit, the light beam of which successively scans the exposure field with the desired intensity pattern by means of a mobile mirror, which is controlled by a control unit.

[0030] Opposite the exposure unit 410, a production platform 412 is provided above the tank 404; it is supported by a lifting mechanism (not shown) so that it is held in a height-adjustable way over the tank bottom 406 in the region above the exposure unit 410. The production platform 412 may likewise be transparent or translucent in order that light can be shone in by a further exposure unit above the production platform in such a way that, at least when forming the first layer on the lower side of the production platform 412, it can also be exposed from above so that the layer cured first on the production platform adheres thereto with even greater reliability.

[0031] The tank 404 contains a filling of highly viscous photopolymerizable material 420. The material level of the filling is much higher than the thickness of the layers which are intended to be defined for position-selective exposure. In order to define a layer of photopolymerizable material, the following procedure is adopted. The production platform 412 is lowered by the lifting mechanism in a controlled way so that (before the first exposure step) its lower side is immersed in the filling of photopolymerizable material 420 and approaches the tank bottom 406 to such an extent that precisely the desired layer thickness Δ (see FIG. 5) remains between the lower side of the production platform 412 and the tank bottom 406. During this immersion process, photopolymerizable material is displaced from the gap between the lower side of the production platform 412 and the tank bottom 406. After the layer thickness Δ has been set, the desired position-selective layer exposure is carried out for this layer, in order to cure it in the desired shape. Particularly when forming the first layer,

exposure from above may also take place through the transparent or translucent production platform 412, so that reliable and complete curing takes place particularly in the contact region between the lower side of the production platform 412 and the photopolymerizable material, and therefore good adhesion of the first layer to the production platform 412 is ensured. After the layer has been formed, the production platform is raised again by means of the lifting mechanism.

[0032] These steps are subsequently repeated several times, the distance from the lower side of the layer 422 formed last to the tank bottom 406 respectively being set to the desired layer thickness Δ and the next layer thereupon being cured position-selectively in the desired way.

[0033] After the production platform 412 has been raised following an exposure step, there is a material deficit in the exposed region as indicated in FIG. 6. This is because after curing the layer set with the thickness Δ, the material of this layer is cured and raised with the production platform and the part of the shaped body already formed thereon. The photopolymerizable material therefore missing between the lower side of the already formed shaped body part and the tank bottom 406 must be filled from the filling of photopolymerizable material 420 from the region surrounding the exposed region. Owing to the high viscosity of the material, however, it does not flow by itself back into the exposed region between the lower side of the shaped body part and the tank bottom, so that material depressions or "holes" can remain here.

[0034] In order to replenish the exposure region with photopolymerizable material, an elongate mixing element 432 is moved through the filling of photopolymerizable material 420 in the tank. In the exemplary embodiment represented in FIGS. 4 to 8, the mixing element 432 comprises an elongate wire which is tensioned between two support arms 430 mounted movably on the side walls of the tank 404. The support arms 430 may be mounted movably in guide slots 434 in the side walls of the tank 404, so that the wire 432 tensioned between the support arms 430 can be moved relative to the tank 404, parallel to the tank bottom 406, by moving the support arms 430 in the guide slots 434. The elongate mixing element 432 has dimensions, and its movement is guided relative to the tank bottom, such that the upper edge of the elongate mixing element 432 remains below the material level of the filling of photopolymerizable material 420 in the tank outside the exposed region. As can

be seen in the sectional view of FIG. 8, the mixing element 432 is below the material level in the tank over the entire length of the wire, and only the support arms 430 protrude beyond the material level in the tank. The effect of arranging the elongate mixing element below the material level in the tank 404 is not that the elongate mixing element 432 substantially moves material in front of it during its movement relative to the tank through the exposed region, but rather this material flows over the mixing element 432 while executing a slight upward movement. The movement of the mixing element 432 from the position shown in FIG. 6, to, for example, a new position in the direction indicated by the arrow A, is shown in FIG. 7. It has been found that by this type of action on the photopolymerizable material in the tank, the material is effectively stimulated to flow back into the material-depleted exposed region between the production platform 412 and the exposure unit 410.

[0035] The movement of the elongate mixing element 432 relative to the tank may firstly, with a stationary tank 404, be carried out by a linear drive which moves the support arms 430 along the guide slots 434 in order to achieve the desired movement of the elongate mixing element 432 through the exposed region between the production platform 412 and the exposure unit 410. As shown in FIG. 8, the tank bottom 406 has recesses 406' on both sides. The support arms 430 project with their lower ends into these recesses 406'. This makes it possible for the elongate mixing element 432 to be held at the height of the tank bottom 406, without interfering with the movement of the lower ends of the support arms 430 through the tank bottom 406.

[0036] Other alternative methods of DLP may be used to prepare the integrated core-shell molds of the present invention. For example, the tank may be positioned on a rotatable platform. When the workpiece is withdrawn from the viscous polymer between successive build steps, the tank may be rotated relative to the platform and light source to provide a fresh layer of viscous polymer in which to dip the build platform for building the successive layers.

[0037] FIG. 9 shows a schematic side view of an integrated core-shell mold with filaments 902 connecting the core 900 and shell portions 901 of the integrated mold. By printing the ceramic mold using the above DLP printing process, the mold can be made in a way that allows the point of connections between the core and shell to be provided through filaments 902. Once the core-shell mold is printed, it may be subject to a post-heat treatment step to cure the printed ceramic polymer material. The cured ceramic mold may then be used

similar to the traditional casting process used in the production of superalloy turbine blades and stator vanes.

[0038] The mold also includes a tube 903 and a funnel section 904 for flowing liquid metal into the integrated mold. An integrated filter 905 is provided within the flow-path for liquid metal as shown in FIG. 9.

[0039] A port 909 is provided for cleaning the integrated core-shell mold before heat treatment and/or metal addition. After printing the ceramic mold by DLP there may be uncured resin within the mold portion or filter portion. The port 909 is provided to allow a flowpath for solvent used to remove uncured resin. In the embodiment shown in FIG. 9, the port 909 is placed underneath the tube 903. If desired, several cleaning ports may be provided in the tube portion or core-shell mold portion. The port 909 may include a screw cap which can be directly printed in the DLP process. However, any method of closing the port may be used. For example, in one aspect the cleaning port is merely a hole in the tube or mold portion that can subsequently be patched with ceramic material prior to curing the mold after the solvent cleaning step is performed.

[0040] In accordance with one aspect of the invention filaments are not used to form a cooling hole pattern. Instead, two or more filaments are provided simply to hold the ceramic core 900 in place while metal is poured into the mold.

[0041] The filaments 902 are preferably cylindrical or oval shape, but may be curved or non-linear. Their exact dimensions may be varied according to a desired film cooling scheme for a particular cast metal part. For example cooling holes may have a cross sectional area ranging from 0.01 to 2 mm^2. In a turbine blade, the cross sectional area may range from 0.01 to 0.15 mm^2, more preferably from 0.05 to 0.1 mm^2, and most preferably about 0.07 mm^2. In the case of a vane, the cooling holes may have a cross sectional area ranging from 0.05 to 0.2 mm^2, more preferably 0.1 to 0.18 mm^2, and most preferably about 0.16 mm^2. The spacing of the cooling holes is typically a multiple of the diameter of the cooling holes ranging from 2× to 10× the diameter of the cooling holes, most preferably about 4-7× the diameter of the holes.

[0042] The length of the filament 902 is dictated by the thickness of the cast component, e.g., turbine blade or stator vane wall thickness, and the angle at which the cooling hole is

disposed relative to the surface of the cast component. The typical lengths range from 0.5 to 5 mm, more preferably between 0.7 to 1 mm, and most preferably about 0.9 mm. The angle at which a cooling hole is disposed is approximately 5 to 35° relative to the surface, more preferably between 10 to 20°, and most preferably approximately 12°. It should be appreciated that the methods of casting according to the present invention allow for formation of cooling holes having a lower angle relative to the surface of the cast component than currently available using conventional machining techniques.

[0043] Notably, the core shown in FIG. 9 is a hollow core construction. One advantage of printing a hollow core is that it reduces the extent of leaching necessary to remove the core after metal casting. In one aspect the core is completely solid ceramic material that can subsequently be leached out. In another aspect of the invention, both the core and connecting filaments are hollow allowing rapid leaching of the ceramic mold material after casting.

[0044] The ceramic filter is adapted for filtration of molten metal as it is poured into the mold. The DLP process described above is particularly suited to provide resolution sufficient to provide porosity for a ceramic filter for filtering molten metal. The particular geometry of the filter used with respect to the invention will depend upon the characteristics of the metal to be used and the design requirements of the finished product. The geometry of the conventional ceramic filters shown in FIGS. 2D and 2E may be used. Preferably, the filter has a cylindrical shape where the height of the cylinder is less than the diameter of the filter. The ceramic filter preferably includes an inlet surface and outlet surface and openings providing a pathway for liquid metal to pass from the inlet surface through the filter and then the outlet surface. The openings preferably comprise at least 60% to at least about 90% of a total volume of the ceramic filter. More preferably, the openings comprise at least 70% to at least about 85% of a total volume of the ceramic filter.

[0045] FIG. 10 shows the integrated core-shell mold of FIG. 9 filled with cast metal 1000, such as a nickel based alloy, i.e., Inconel. After formation of the integrated core-shell mold and filter, the ceramic is cleaned by rinsing solvent through the port 909. The port is then closed or plugged. The metal 1000 is filled into cavity 907, while the hollow core cavity 908 is left unfilled. After casting, the ceramic core 900, shell 901 and filaments 902 are removed using a combination of chemical and mechanical processes. The hollow nature of the core 900 allows for removal of the ceramic mold while minimizing the amount of

chemical leaching needed. This saves time and reduces the potential for errors in the manufacturing process. As noted above, a solid core may be used in place of the hollow core if desired. Likewise, hollow filaments may be used in place of solid filaments.

[0046] Upon leaching of the ceramic core-shell, the resulting cast object is a turbine blade having a cooling hole pattern in the surface of the blade. It should be appreciated that although FIGS. 9-10 provide a cross sectional view showing cooling holes at the leading and trailing edge of the turbine blade, that additional cooling holes may be provided where desired including on the sides of the turbine blades or any other location desired. In particular, the present invention may be used to form cooling holes within the casting process in any particular design. In other words, one would be able to produce conventional cooling holes in any pattern where drilling was used previously to form the cooling holes. However, the present invention will allow for cooling hole patterns previously unattainable due to the limitations of conventional technologies for creating cooling holes within cast components, i.e., drilling. As noted above, the filaments may be used to hold the core in place during casting. In that case, the holes in the surface provided by the filaments can be closed using a brazing or equivalent operation. As shown in FIG. 10, the filter 905 includes the metal 1000 poured through the funnel and through the filter. FIG. 11 shows a cast turbine blade 1100 with cooling holes 1101, 1102 connecting the blade surface to the hollow core 1103 of the blade.

[0047] FIG. 12 shows an example where a filter element 1200 is oriented to filter molten metal before it enters a first cavity of a first turbine blade mold 1201 and a second cavity of a second turbine blade mold 1202. Additional turbine blade molds may be provided in a direction coming out of the page (not shown in the cross-sectional view that is provided). A port 1203 is located at the lowest portion of the metal supply tube 1204 for rinsing uncured ceramic polymer from the mold before filling with metal.

[0048] After leaching, the resulting holes in the turbine blade from the core print filaments may be brazed shut if desired. Otherwise the holes left by the core print filaments may be incorporated into the design of the internal cooling passages. Alternatively, cooling hole filaments may be provided to connect the tip plenum core to the shell in a sufficient quantity to hold the tip plenum core in place during the metal casting step.

[0049] After printing the core-shell mold structures in accordance with the invention, the core-shell mold may be cured and/or fired depending upon the requirements of the ceramic core photopolymer material. Molten metal may be poured into the mold to form a cast object in the shape and having the features provided by the integrated core-shell mold. In the case of a turbine blade or stator vane, the molten metal is preferably a superalloy metal that formed into a single crystal superalloy turbine blade or stator vane using techniques known to be used with conventional investment casting molds.

[0050] In an aspect, the present invention relates to the core-shell mold structures of the present invention incorporated or combined with features of other core-shell molds produced in a similar manner. The following patent applications include disclosure of these various aspects and their use:

[0051] U.S. Patent Application No. [ ], titled "INTEGRATED CASTING CORE-SHELL STRUCTURE" with attorney docket number 037216.00036/284976, and filed December 13, 2016;

[0052] U.S. Patent Application No. [ ], titled "INTEGRATED CASTING CORE-SHELL STRUCTURE WITH FLOATING TIP PLENUM" with attorney docket number 037216.00037/284997, and filed December 13, 2016;

[0053] U.S. Patent Application No. [ ], titled "MULTI-PIECE INTEGRATED CORE-SHELL STRUCTURE FOR MAKING CAST COMPONENT" with attorney docket number 037216.00033/284909, and filed December 13, 2016;

[0054] U.S. Patent Application No. [ ], titled "MULTI-PIECE INTEGRATED CORE-SHELL STRUCTURE WITH STANDOFF AND/OR BUMPER FOR MAKING CAST COMPONENT" with attorney docket number 037216.00042/284909A, and filed December 13, 2016;

[0055] U.S. Patent Application No. [ ], titled "INTEGRATED CASTING CORE SHELL STRUCTURE WITH PRINTED TUBES FOR MAKING CAST COMPONENT" with attorney docket number 037216.00032/284917, and filed December 13, 2016;

[0056] U.S. Patent Application No. [ ], titled "INTEGRATED CASTING CORE SHELL STRUCTURE FOR MAKING CAST COMPONENT WITH NON-LINEAR HOLES" with attorney docket number 037216.00041/285064, and filed December 13, 2016;

[0057] U.S. Patent Application No. [ ], titled "INTEGRATED CASTING CORE SHELL STRUCTURE FOR MAKING CAST COMPONENT WITH COOLING HOLES IN INACCESSIBLE LOCATIONS" with attorney docket number 037216.00055/285064A, and filed December 13, 2016;

[0058] U.S. Patent Application No. [ ], titled "INTEGRATED CASTING CORE SHELL STRUCTURE FOR MAKING CAST COMPONENT HAVING THIN ROOT COMPONENTS" with attorney docket number 037216.00053/285064B, and filed December 13, 2016.

[0059] The disclosures of each of these applications are incorporated herein in their entirety to the extent they disclose additional aspects of core-shell molds and methods of making that can be used in conjunction with the core-shell molds disclosed herein.

[0060] This written description uses examples to disclose the invention, including the preferred embodiments, and also to enable any person skilled in the art to practice the invention, including making and using any devices or systems and performing any incorporated methods. The patentable scope of the invention is defined by the claims, and may include other examples that occur to those skilled in the art. Such other examples are intended to be within the scope of the claims if they have structural elements that do not differ from the literal language of the claims, or if they include equivalent structural elements with insubstantial differences from the literal language of the claims. Aspects from the various embodiments described, as well as other known equivalents for each such aspect, can be mixed and matched by one of ordinary skill in the art to construct additional embodiments and techniques in accordance with principles of this application.

CLAIMS

1. A method for fabricating a ceramic mold, comprising:

(a) contacting a cured portion of a workpiece with a liquid ceramic photopolymer;

(b) irradiating a portion of the liquid ceramic photopolymer adjacent to the cured portion through a window contacting the liquid ceramic photopolymer;

(c) removing the workpiece from the uncured liquid ceramic photopolymer; and

(d) repeating steps (a) – (c) until a ceramic mold is formed, the ceramic mold comprising a core portion, a shell portion, and a filter portion with at least one cavity between the core portion and the shell portion, the cavity adapted to define the shape of a cast component upon casting and removal of the ceramic mold and the filter portion oriented in the path of molten metal flowing into the cavity of the mold.

2. The method of claim 1, wherein the process comprises, after step (d), a step (e) comprising pouring a liquid metal into a casting mold and solidifying the liquid metal to form the cast component.

3. The method of claim 2, wherein the process comprises, after step (e), a step (f) comprising removing the mold from the cast component.

4. The method of claim 3, wherein removing the mold from the cast component comprises a combination of mechanical force and chemical leaching.

5. The method of claim 1, wherein the ceramic mold comprises a plurality of filaments joining the core portion and shell portion.

6. The method of claim 1, wherein the ceramic filter is a cylindrical-shaped filter.

7. The method of claim 1, wherein the ceramic filter includes an inlet surface and outlet surface and openings providing a pathway for liquid metal to pass from the inlet surface through the filter and then the outlet surface.

8. The method of claim 7, wherein the openings comprise at least 60% to at least about 90% of a total volume of the ceramic filter.

9. The method of claim 7, wherein the openings comprise at least 70% to at least about 85% of a total volume of the ceramic filter.

10. A method of preparing a cast component comprising:

pouring a liquid metal into a ceramic casting mold and solidifying the liquid metal to form the cast component, the ceramic casting mold comprising a core portion, a shell portion, and a filter portion with at least one cavity between the core portion and the shell portion, the cavity adapted to define the shape of a cast component upon casting and removal of the ceramic mold and the filter portion oriented in the path of molten metal flowing into the cavity of the mold, the ceramic casting mold further comprising a plurality of ceramic filaments joining the core portion and shell portion; and

removing the ceramic casting mold from the cast component by leaching at least a portion of the ceramic core through the holes in the cast component provided by the filaments.

11. The method of claim 10, wherein removing the ceramic casting mold from the cast component comprises a combination of mechanical force and chemical leaching.

12. The method of claim 10, wherein the ceramic filter is a cylindrical-shaped filter.

13. The method of claim 10, wherein the ceramic filter includes an inlet surface and outlet surface and openings providing a pathway for liquid metal to pass from the inlet surface through the filter and then the outlet surface.

14. The method of claim 13, wherein the openings comprise at least 60% to at least about 90% of a total volume of the ceramic filter.

15. The method of claim 13, wherein the openings comprise at least 70% to at least about 85% of a total volume of the ceramic filter.

16. A ceramic casting mold comprising:

a core portion, a shell portion, and a filter portion with at least one cavity between the core portion and the shell portion, the cavity adapted to define the shape of a cast component upon casting and removal of the ceramic mold and the filter portion oriented in the path of molten metal flowing into the cavity of the mold; and

a plurality of filaments joining the core portion and shell portion.

17. The ceramic casting mold of claim 16, wherein the ceramic filter is a cylindrical-shaped filter.

18. The ceramic casting mold of claim 16, wherein the ceramic filter includes an inlet surface and outlet surface and openings providing a pathway for liquid metal to pass from the inlet surface through the filter and then the outlet surface.

19. The ceramic casting mold of claim 18, wherein the openings comprise at least 60% to at least about 90% of a total volume of the ceramic filter.

20. The ceramic casting mold of claim 18, wherein the openings comprise at least 70% to at least about 85% of a total volume of the ceramic filter.

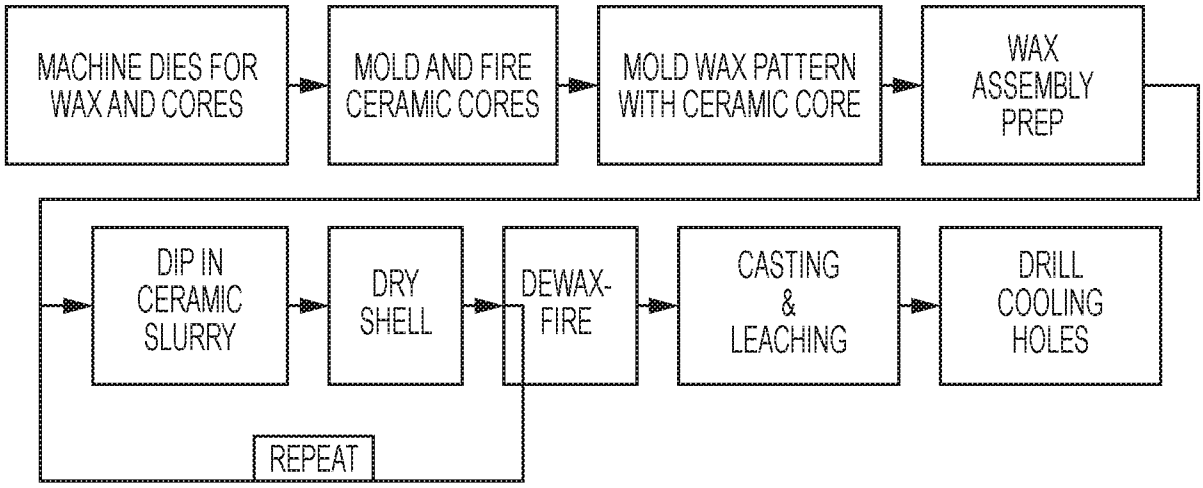

FIG. 1
PRIOR ART

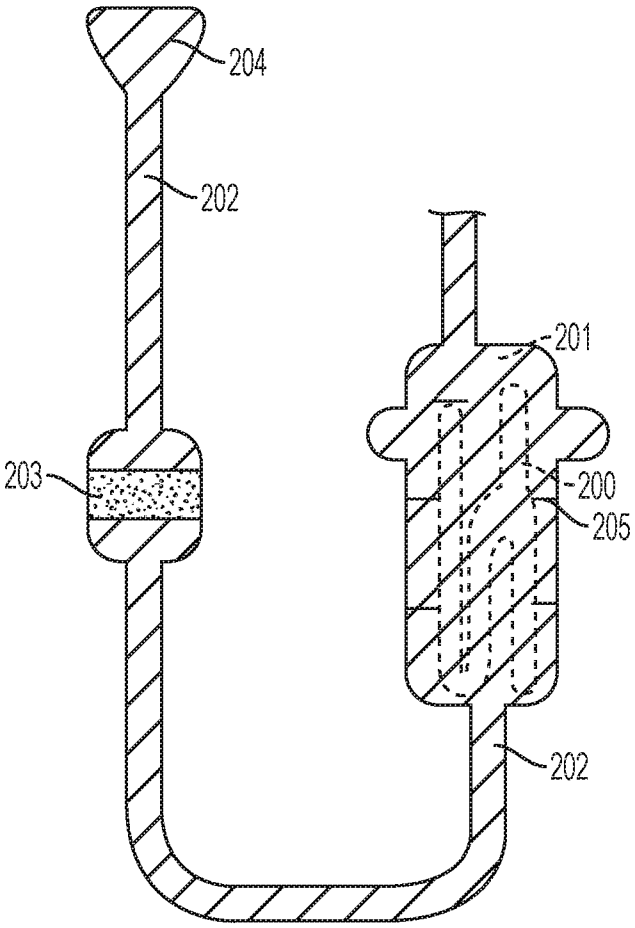

FIG. 2A
PRIOR ART

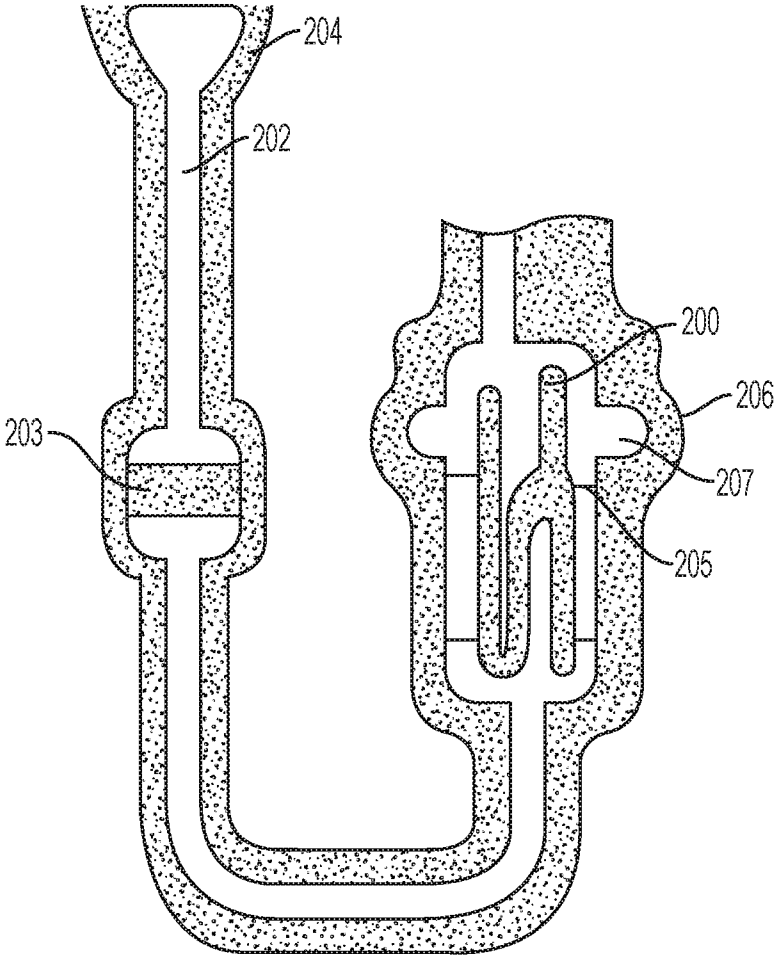

FIG. 2B
PRIOR ART

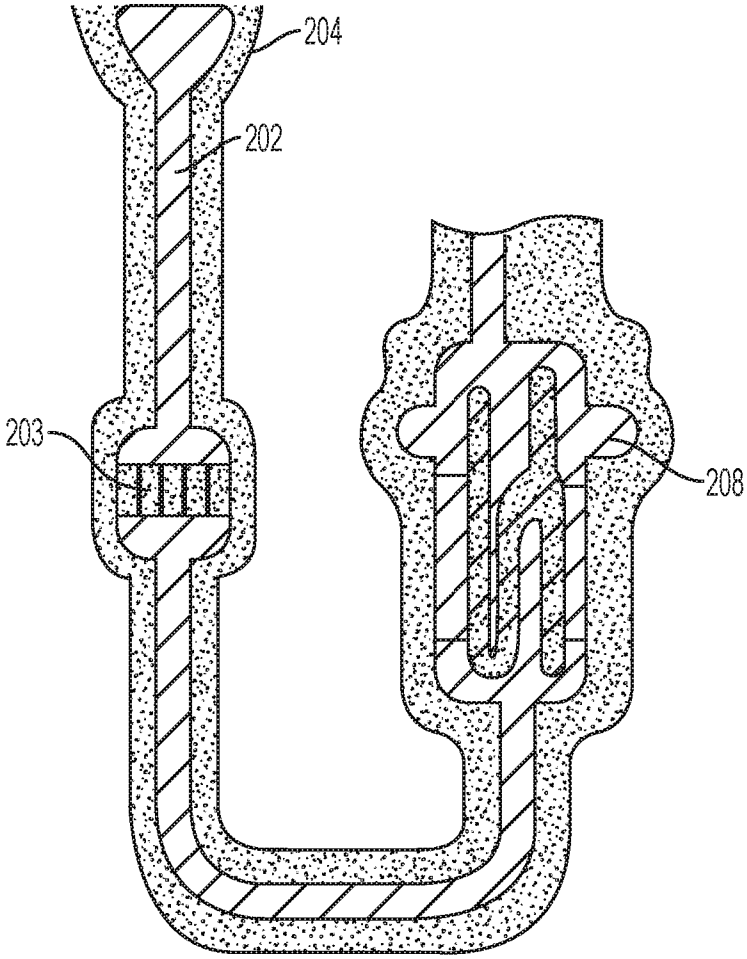

FIG. 2C
PRIOR ART

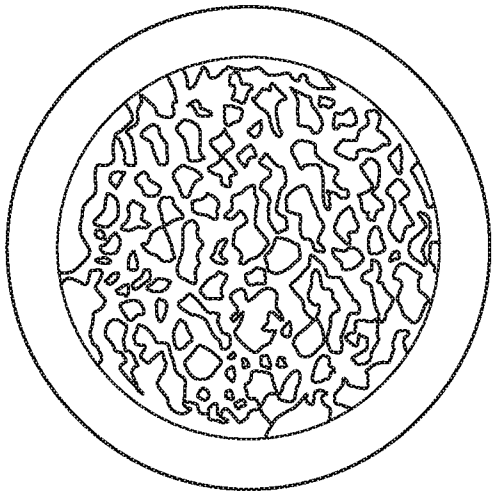

FIG. 2D
PRIOR ART

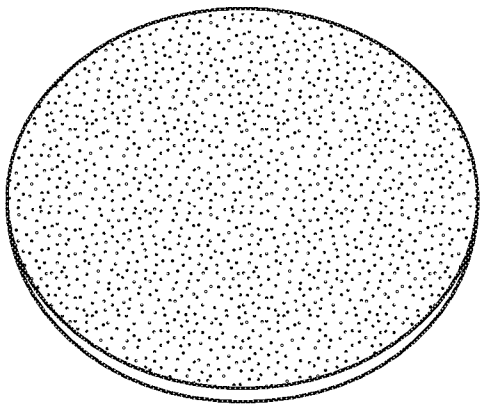

FIG. 2E
PRIOR ART

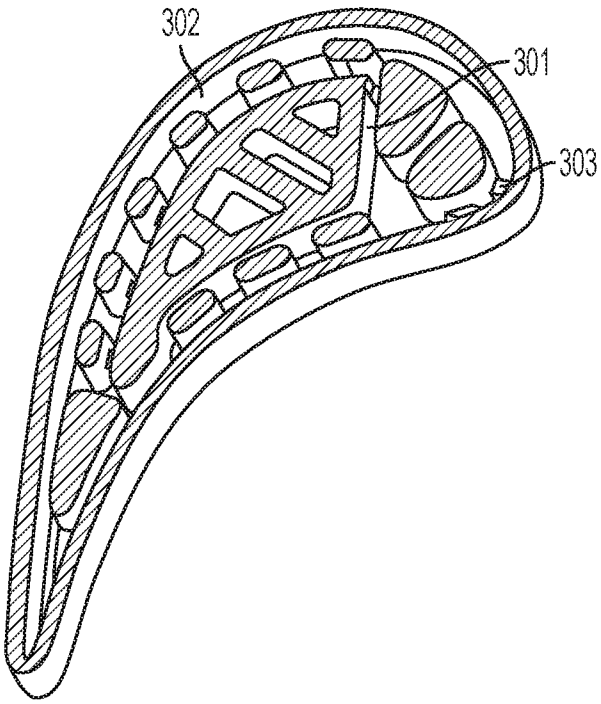

FIG. 3
PRIOR ART

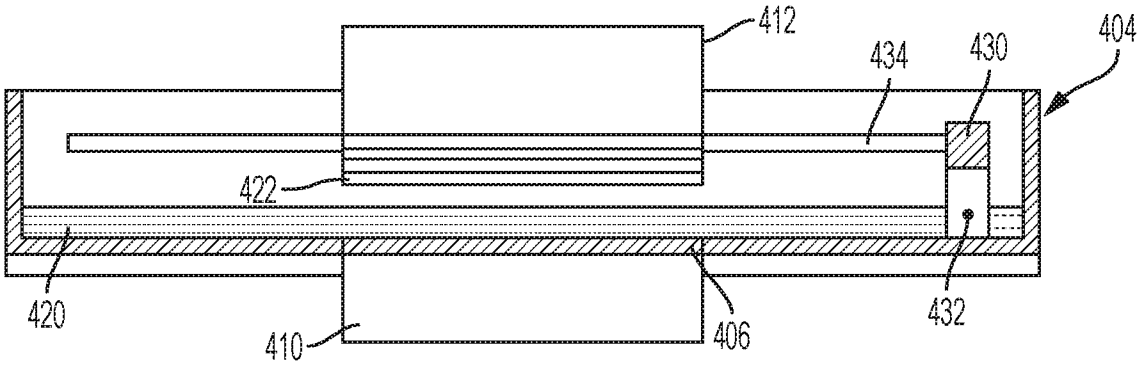
412
434
430
404
422
420
410
406
432

FIG. 4

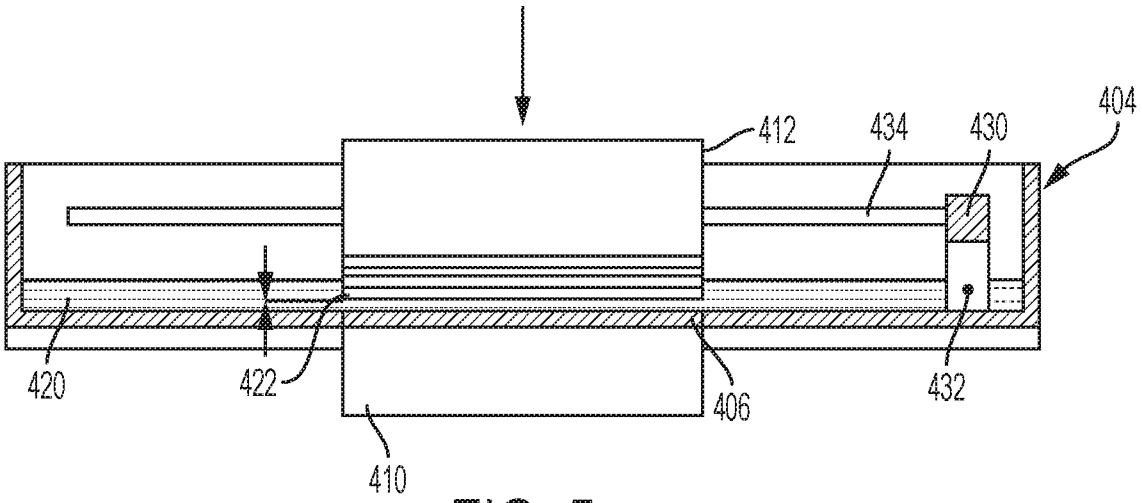
404
412
434
430
420
422
406
432
410

FIG. 5

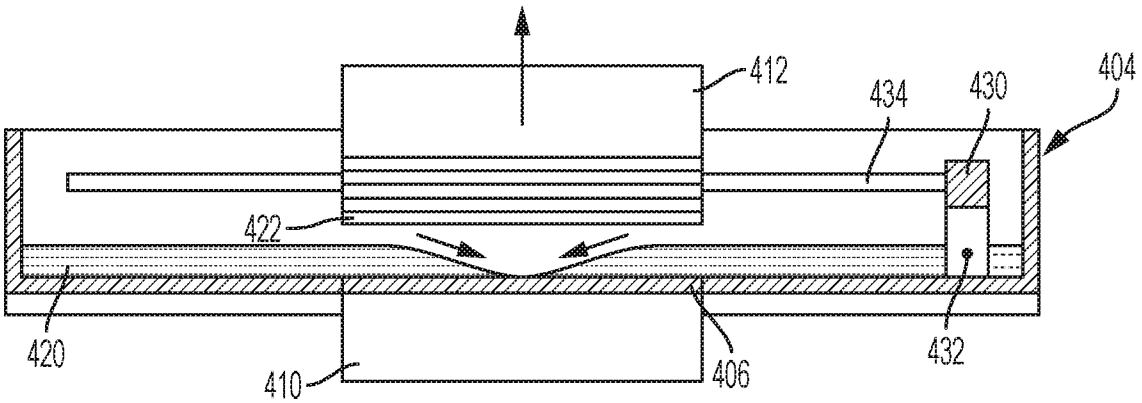
412
434
430
404
422
420
410
406
432

FIG. 6

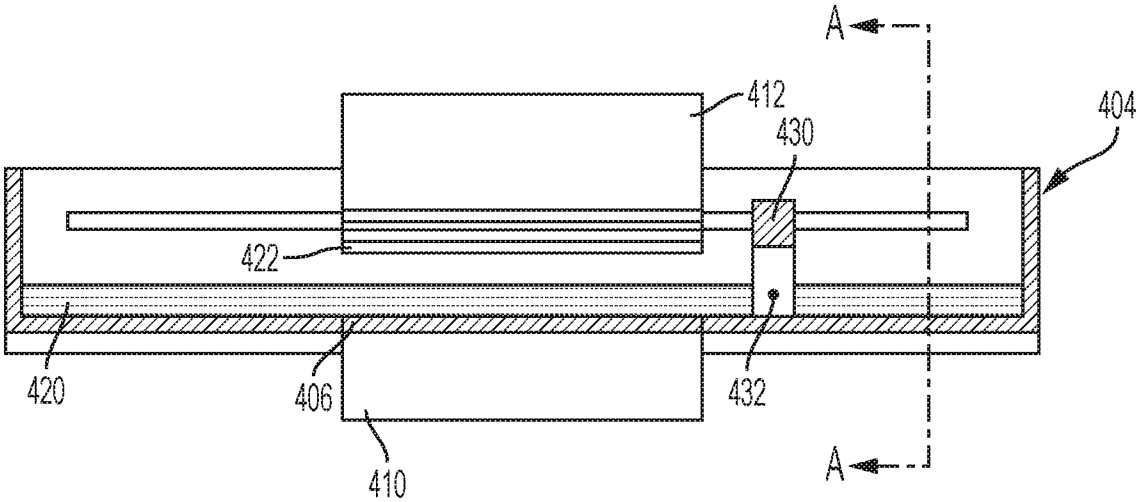
A
412
430
404
422
420
406
432
410
A

FIG. 7

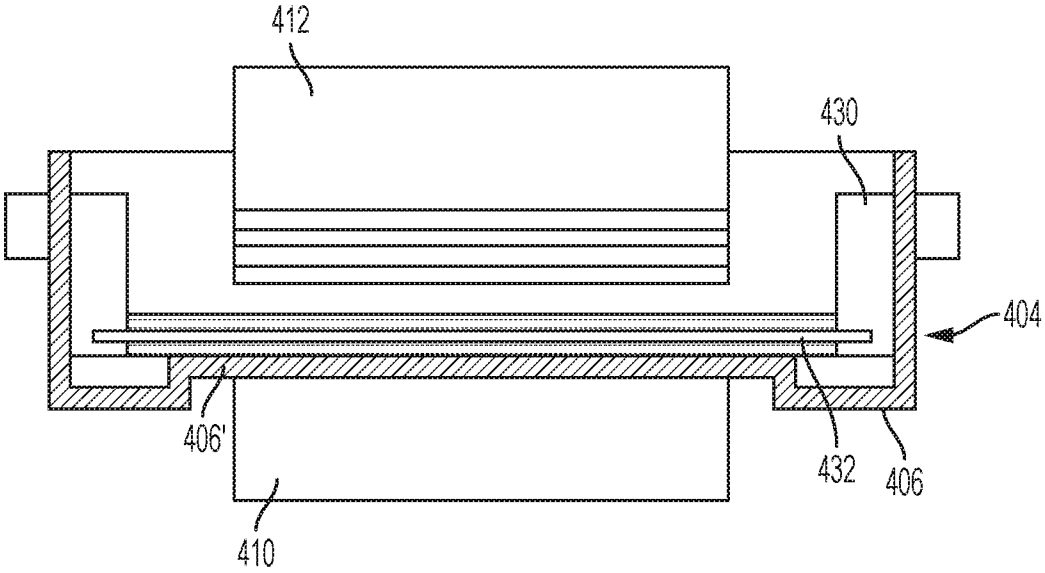

FIG. 8

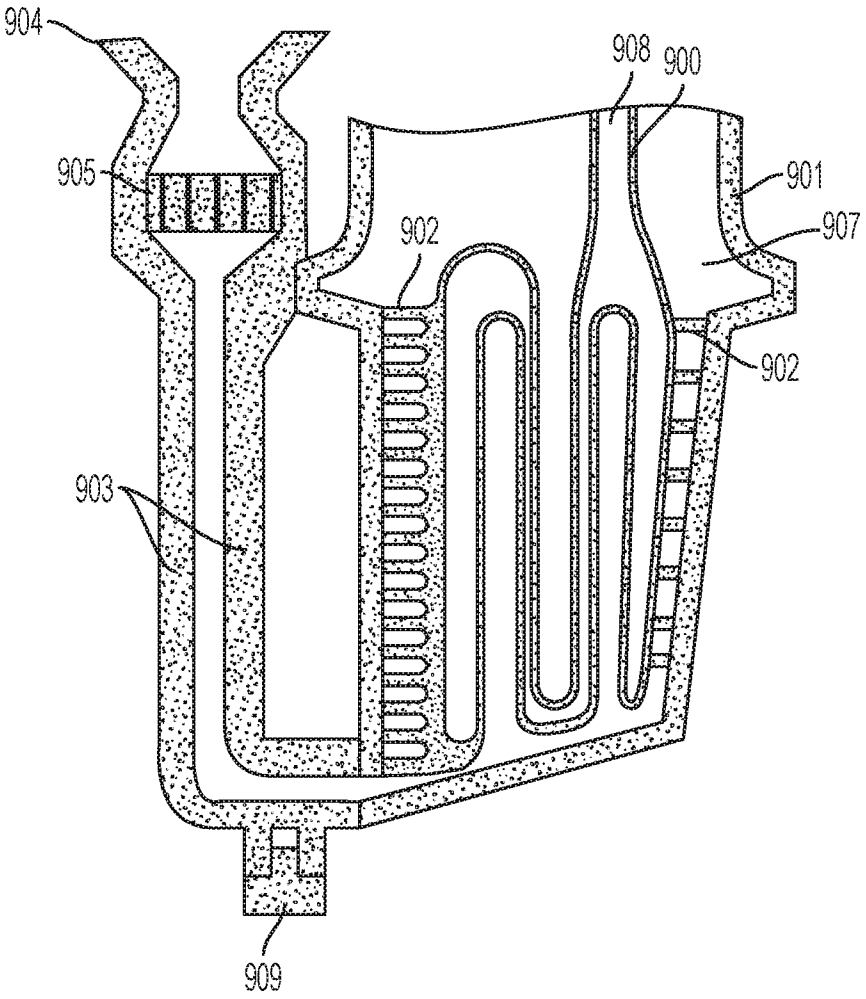

FIG. 9

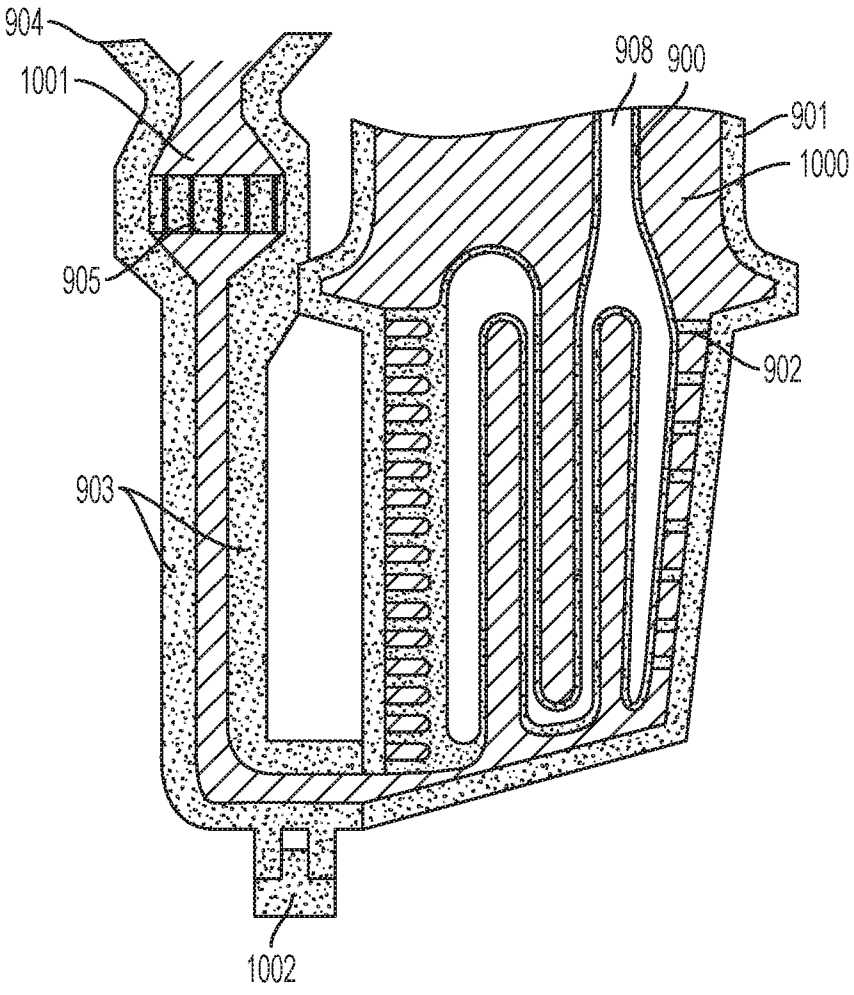

FIG. 10

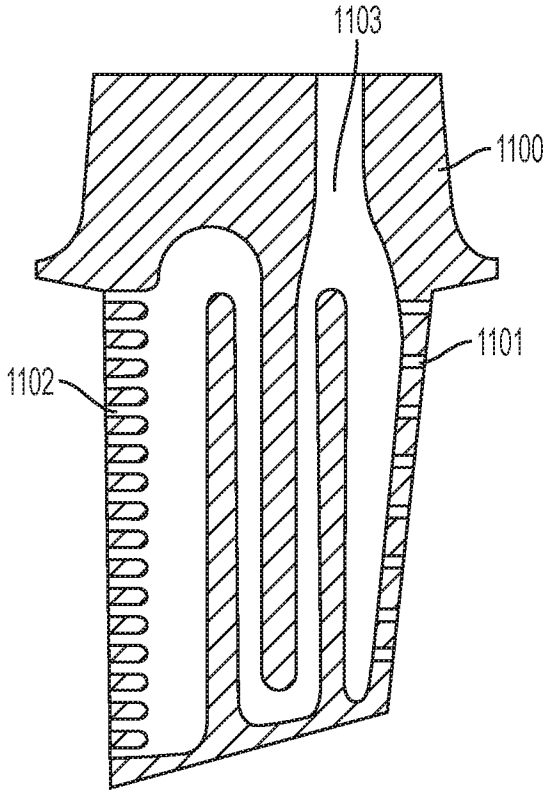

FIG. 11

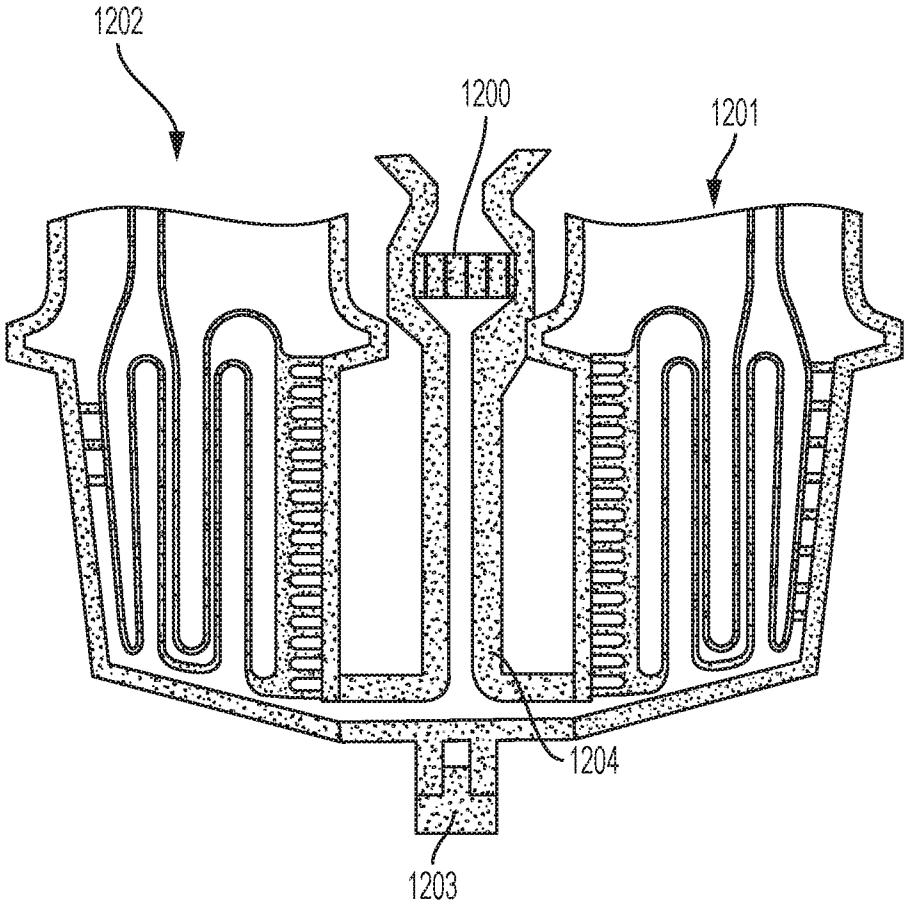

FIG. 12

INTERNATIONAL SEARCH REPORT

International application No.
PCT/US2017/060165

A. CLASSIFICATION OF SUBJECT MATTER

B22C 9/24(2006.01)i, B22C 9/04(2006.01)i, B22C 9/08(2006.01)i

According to International Patent Classification (IPC) or to both national classification and IPC

B. FIELDS SEARCHED

Minimum documentation searched (classification system followed by classification symbols)
B22C 9/24; B29C 33/42; B22C 9/10; F01D 5/18; B22D 21/06; B28B 7/34; B22D 25/02; B29C 35/08; B22C 9/04; B22C 9/08

Documentation searched other than minimum documentation to the extent that such documents are included in the fields searched
Korean utility models and applications for utility models
Japanese utility models and applications for utility models

Electronic data base consulted during the international search (name of data base and, where practicable, search terms used)
eKOMPASS(KIPO internal) & Keywords: ceramic mold, photopolymer, cure, core, shell, filter, cavity, cast

C. DOCUMENTS CONSIDERED TO BE RELEVANT

Category*	Citation of document, with indication, where appropriate, of the relevant passages	Relevant to claim No.
Y	US 2014-0271129 A1 (MUELLER et al.) 18 September 2014 See paragraphs [0001], [0036]-[0037], [0039]; claim 15; and figures 5, 7.	1-20
Y	US 2015-0321249 A1 (UNITED TECHNOLOGIES CORPORATION) 12 November 2015 See paragraphs [0070], [0081]; and figure 4.	1-20
Y	US 2012-0248657 A1 (EBERT et al.) 04 October 2012 See claim 1; and figures 1-5.	1-9
A	US 2001-0024000 A1 (LEE et al.) 27 September 2001 See paragraph [0020]; and figures 2, 4.	1-20
A	WO 00-32331 A1 (HOWMET RESEARCH CORPORATION) 08 June 2000 See page 4 - page 8; and figures 1-5.	1-20

☐ Further documents are listed in the continuation of Box C.

☒ See patent family annex.

* Special categories of cited documents:
"A" document defining the general state of the art which is not considered to be of particular relevance
"E" earlier application or patent but published on or after the international filing date
"L" document which may throw doubts on priority claim(s) or which is cited to establish the publication date of another citation or other special reason (as specified)
"O" document referring to an oral disclosure, use, exhibition or other means
"P" document published prior to the international filing date but later than the priority date claimed
"T" later document published after the international filing date or priority date and not in conflict with the application but cited to understand the principle or theory underlying the invention
"X" document of particular relevance; the claimed invention cannot be considered novel or cannot be considered to involve an inventive step when the document is taken alone
"Y" document of particular relevance; the claimed invention cannot be considered to involve an inventive step when the document is combined with one or more other such documents,such combination being obvious to a person skilled in the art
"&" document member of the same patent family

Date of the actual completion of the international search	Date of mailing of the international search report
18 January 2018 (18.01.2018)	**19 January 2018 (19.01.2018)**

Name and mailing address of the ISA/KR
International Application Division
Korean Intellectual Property Office
189 Cheongsa-ro, Seo-gu, Daejeon, 35208, Republic of Korea
Facsimile No. +82-42-481-8578

Authorized officer
BAE, Geun Tae
Telephone No. +82-42-481-3547

INTERNATIONAL SEARCH REPORT

Information on patent family members

International application No.
PCT/US2017/060165

Patent document cited in search report	Publication date	Patent family member(s)	Publication date
US 2014-0271129 A1	18/09/2014	EP 2777842 A1	17/09/2014
		EP 2777842 B1	20/01/2016
		ES 2564407 T3	22/03/2016
		HK 1196331 A1	22/07/2016
		JP 2014-208373 A	06/11/2014
		US 9835035 B2	05/12/2017
US 2015-0321249 A1	12/11/2015	EP 2931458 A2	21/10/2015
		EP 2931459 A2	21/10/2015
		EP 2931459 A4	13/07/2016
		SG 11201503276P A	29/06/2015
		US 2014-0363305 A1	11/12/2014
		US 2015-0328681 A1	19/11/2015
		US 9687910 B2	27/06/2017
		WO 2014-093826 A2	19/06/2014
		WO 2014-093826 A3	13/11/2014
		WO 2014-133635 A2	04/09/2014
		WO 2014-133635 A3	20/11/2014
US 2012-0248657 A1	04/10/2012	EP 2505341 A1	03/10/2012
		EP 2505341 B1	08/05/2013
		ES 2424738 T3	08/10/2013
		JP 2012-206513 A	25/10/2012
		JP 6174842 B2	02/08/2017
		US 9079357 B2	14/07/2015
US 2001-0024000 A1	27/09/2001	US 6331267 B1	18/12/2001
		US 6502801 B2	07/01/2003
WO 00-32331 A1	08/06/2000	DE 69927606 T2	06/07/2006
		EP 1144141 A1	17/10/2001
		EP 1144141 A4	11/08/2004
		EP 1144141 B1	05/10/2005
		EP 1227905 A1	07/08/2002
		EP 1227905 B1	28/03/2007
		JP 2002-531267 A	24/09/2002
		JP 2003-502159 A	21/01/2003
		JP 4369622 B2	25/11/2009
		JP 4878713 B2	15/02/2012
		US 6186217 B1	13/02/2001
		US 6347660 B1	19/02/2002
		WO 00-78480 A1	28/12/2000