Oct. 18, 1927. 1,645,607

A. L. MATTE

SYSTEM OF SYNCHRONIZING SIGNALING APPARATUS

Original Filed Feb. 26, 1925 4 Sheets-Sheet 1

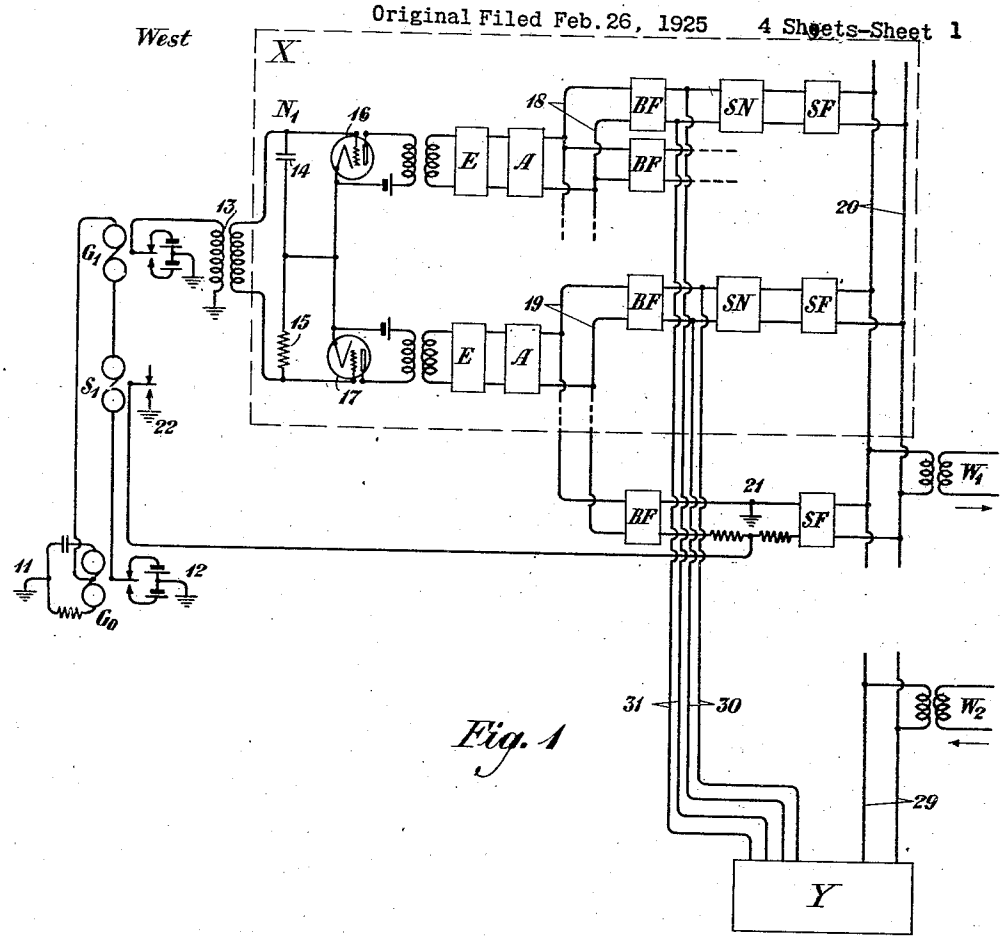

Fig. 1

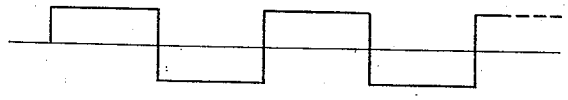

Fig. 3

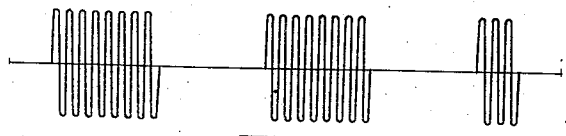

Fig. 4

INVENTOR
A. L. Matte
BY
ATTORNEY

Oct. 18, 1927. 1,645,607

A. L. MATTE

SYSTEM OF SYNCHRONIZING SIGNALING APPARATUS

Original Filed Feb. 26, 1925 4 Sheets-Sheet 2

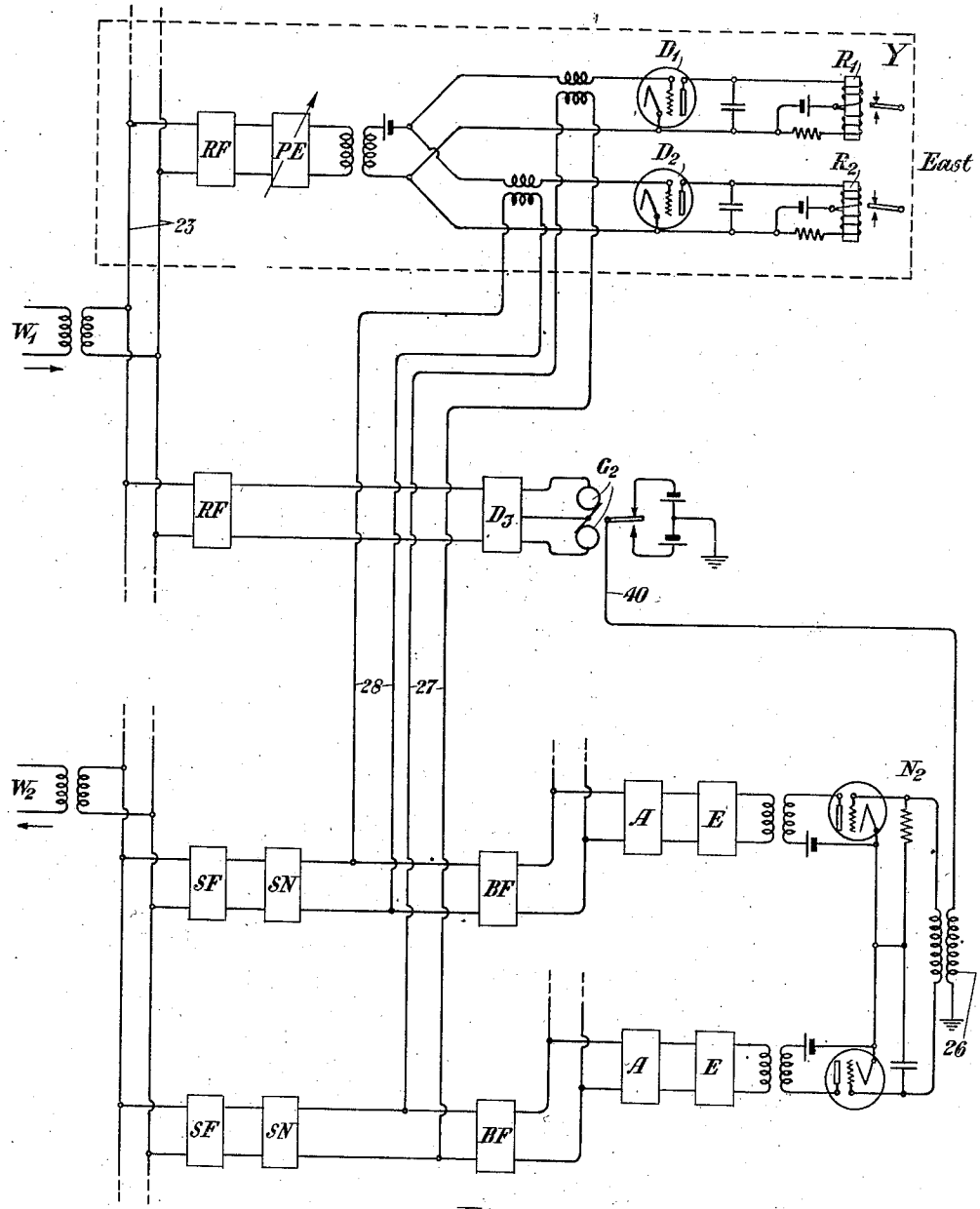

Fig. 2

INVENTOR
A. L. Matte
BY
ATTORNEY

Oct. 18, 1927. 1,645,607

A. L. MATTE

SYSTEM OF SYNCHRONIZING SIGNALING APPARATUS

Original Filed Feb. 26, 1925 4 Sheets-Sheet 3

Fig. 5

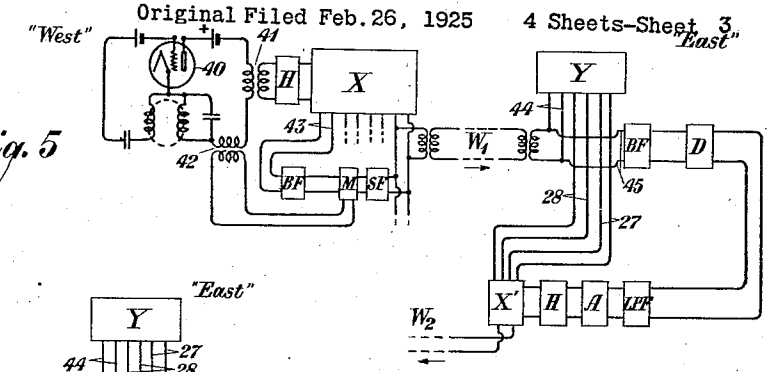

Fig. 6

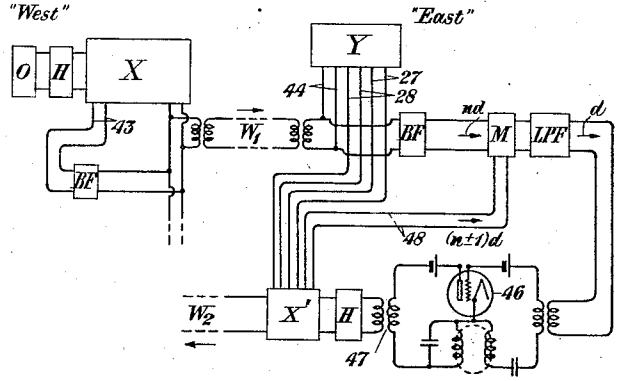

Fig. 7

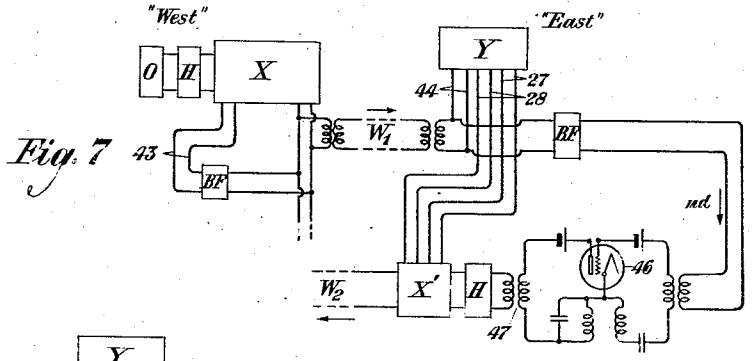

Fig. 8

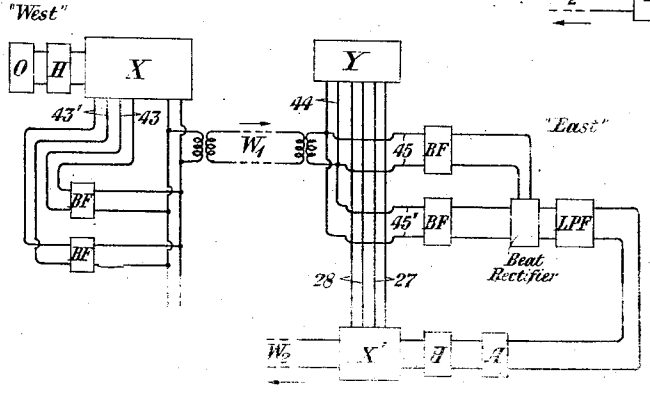

INVENTOR
A. L. Matte
BY
ATTORNEY

Oct. 18, 1927. 1,645,607

A. L. MATTE

SYSTEM OF SYNCHRONIZING SIGNALING APPARATUS

Original Filed Feb. 26, 1925 4 Sheets-Sheet 4

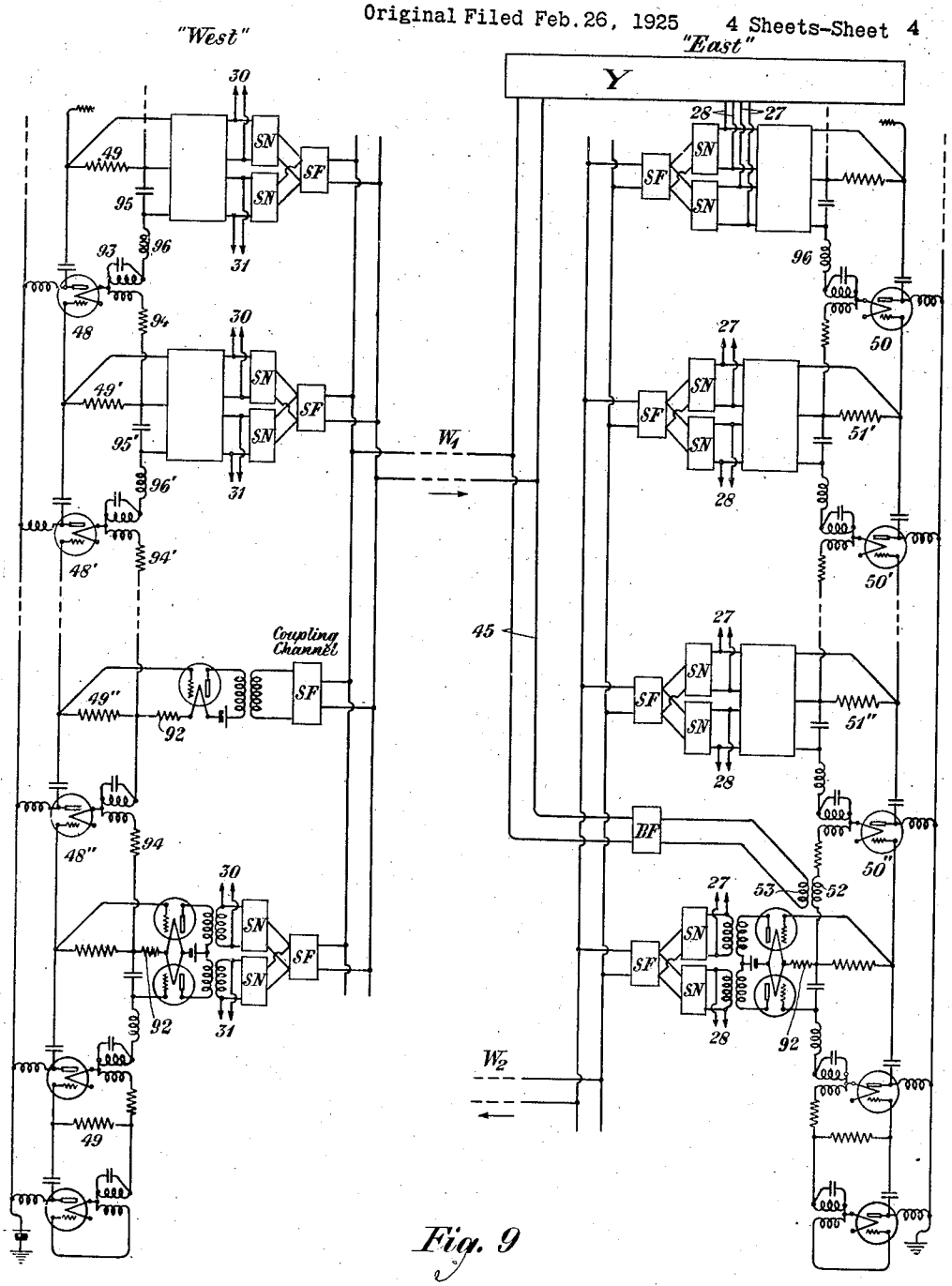

Fig. 9

INVENTOR
A. L. Matte
BY
ATTORNEY

Patented Oct. 18, 1927.

1,645,607

UNITED STATES PATENT OFFICE.

ANDREW L. MATTE, OF BROOKLYN, NEW YORK, ASSIGNOR TO AMERICAN TELEPHONE AND TELEGRAPH COMPANY, A CORPORATION OF NEW YORK.

SYSTEM OF SYNCHRONIZING SIGNALING APPARATUS.

Application filed February 26, 1925, Serial No. 11,801. Renewed May 20, 1927.

An object of my invention is to provide a new and improved system of synchronizing apparatus at points between which an electrical transmission is effected. Another object of my invention is to provide for proper synchronous relation of the currents in the various parts of an electric signaling system. Another object is to provide for synchronizing by currents of suitable frequency, more particularly to synchronize relatively low frequency apparatus by transmission of higher frequency currents. Still another object is to govern the frequency of a vacuum tube oscillator by impressing a current of harmonic frequency thereon. These and various other objects of my invention will become apparent on consideration of several particular embodiments of the invention which I have chosen for illustration and which I now present by way of example in the following specification taken with the accompanying drawings. It will be understood that the invention is defined in the appended claims and that the following description relates more particularly to the examples shown in the drawings.

Referring to the drawings, Figure 1 is a diagram illustrating a transmitting and receiving station which may be called "West"; Fig. 2 is a diagram illustrating the corresponding cooperating station which may be called "East"; Figs. 3 and 4 are wave train diagrams that will be referred to in explaining the mode of operation of the system of Figs. 1 and 2; and Figs. 5 to 9 are diagrams illustrating modifications

In Fig. 1 a local circuit may be readily traced from ground 11, through the condenser and resistance in parallel and through the windings of the relays G_0, G_1 and S_1, armature and contact of relay G_0 to the battery and ground 12. This circuit, with its condenser and resistance in parallel, causes periodic vibration of the armature of the relay G_0 with accompanying alternating current through the circuit, and accordingly the armatures of the other two relays G_1 and S_1 will vibrate at the same frequency.

The vibration of the armature of relay G_1 sends an alternating current through the primary of the transformer 13 and induces a corresponding current in its secondary. This current will have approximately the wave form shown in Fig. 3, composed of a simple sinusoidal fundamental of the same frequency and odd harmonics.

The phase splitter N_1 comprising the condenser 14 and resistance 15 splits each of these simple components into two phases 90° apart, impressing the corresponding electromotive forces across the filament and grid of the respective vacuum tubes 16 and 17. Since these tubes draw substantially no current from the input circuits, there will be substantially no reaction on the phase splitter, and the output currents from the vacuum tubes 16 and 17 will be in the proper 90° relation for the two components of each of the component frequencies, the fundamental and the odd harmonics.

The output currents from the vacuum tubes 16 and 17 go to respective attenuation equalizers E which bring the different frequency components to a desired intensity relation. From there the currents go to respective amplifiers A and are put on the respective conductor pairs 18 and 19 to which band filters BF are connected in multiple. Each band filter BF passes only one of the harmonic frequencies.

Each harmonic component passed by a respective band filter goes to a respective sending network SN controlled by a key or equivalent device. The signal wave trains from each sending network SN go through a respective band filter SF and thence in multiple to the common conductor pair 20 and to the line W.

It will be seen that the various carrier currents on the line W_1 differ not only in frequency, being all harmonics of a single fundamental, but that for each frequency there are two components 90° apart in phase, one component put on through the conductors 18 and the other through the conductors 19. All these component currents are modified to form signals by means of the sending networks SN except that one component in one phase is appropriated for securing synchronism at the station "East"; the other phase of the same frequency is suppressed. The sending network for the synchronizing channel is controlled, not by a regular signaling network but by the relay S_1, so that the carrier current wave train in this channel is interrupted regularly at the frequency of the fundamental, and a fixed phase relation is obtained between

modulating and modulated waves. Accordingly in this channel regular interrupted wave trains are sent, as shown in Fig. 4.

At the station "East" the currents received from the line W_1 go through the conductors 23 to respective band filters RF which pass the respective frequencies. These currents then go through suitable phase adjusters PE to the respective detectors D_1 and D_2 whose output currents control the receiving polar relays R_1 and R_2. The detectors D_1 and D_2 also receive currents of the same frequency but a quarter phase apart over the conductors 27 and 28 from a source that will be pointed out presently. One of these locally generated currents corresponds in phase with one phase of signal current, and the other locally generated current corresponds in phase with the other phase of signal current, and therefore, one phase of signal current is detected in one detector D_1 and the other in detector D_2. For these detectors D_1 and D_2 local currents of the same frequency as the respective carrier currents and in proper phase relation are required. These are supplied over the respective circuits 27 and 28, and their generation in the proper phase relation will now be described.

One of the receiving filters RF connected with the conductors 23 passes the regularly interrupted wave trains controlled at the sending end by the relay S_1 and pictured in Fig. 4. These wave trains go to the detector D_3, whose output controls the relay G_2, whose armature accordingly vibrates regularly and puts a current on the circuit 40 corresponding to the diagram of Fig. 3. This current passing through the primary of the transformer 26 generates a current in its secondary which goes to the phase splitter N_2, from which point the operation is the same as for the phase splitter N_1 at station "West."

Accordingly the various band filters BF at station "East" deliver currents corresponding in frequency to the various harmonics described as generated at station "West" and in two phases 90° apart for each such harmonic. These currents go on through suitable sending networks and sending filters to the line W_2 from "East" to "West," as already described for the line W_1, from "West" to "East." Also before going through the sending networks, branch circuits such as 27 and 28, are taken off leading to the respective detectors D_1 and D_2 and furnishing the locally generated currents suitable to the method of reception here employed.

At station "West" the currents received over the line W_2 go to receiving apparatus similar to that at station "East", as indicated by the box Y which corresponds to the apparatus within the dotted enclosing line marked "Y" at station "East". The locally generated currents for Y at "West" are obtained by conductor pairs 30 and 31 from the outputs of the band filters BF.

In connection with many transmission lines, it is not practicable to transmit a low frequency; in other words, the line will cut off frequencies below a certain limit, and if it were attempted to transmit the unmodulated fundamental frequency in a system such as that shown in Figs. 1 and 2, the transmission would be so poor for this frequency that it would not get through to the receiving end. As will be seen, this difficulty is obviated by transmitting a harmonic for synchronizing purposes, and in the case shown in Figs. 1 and 2, this harmonic is modulated by the fundamental frequency, and then at the receiving end it is demodulated to obtain the fundamental frequency. Also it will be noticed that the operation of the apparatus involves a definite relation in phase and frequency between the fundamental and the various harmonics. Whatever the fundamental frequency at the station "West", it will be exactly the same at the station "East", and, moreover, the various harmonics at both stations will be precisely harmonic to that fundamental frequency and in definite phase relation with the fundamental. A four-wire carrier telegraph system using phase discrimination requires that rather precise phase relations be maintained among the currents at various points of the system. Accordingly my invention finds useful application in such a system, and I have disclosed such a system in Figs. 1 and 2.

Referring to Fig. 5, this shows a modification as compared with Figs. 1 and 2. The apparatus enclosed within the dotted rectangle X of Fig. 1 is represented by the simple box X in Fig. 5, and similarly the apparatus Y of Fig. 2 is represented by the box Y in Fig. 5.

The vacuum tube oscillator 40 of Fig. 5 transmits its output through the transformer 41 to the harmonic generator or distorter H. The device H is well known as an element which will distort the wave form of a simple alternating current of a certain basic frequency so as to make it rich in harmonics, which may then be separated to various channels as already explained for the apparatus X in Fig. 1.

One of the harmonic frequencies from the apparatus X is taken off over the conductors 43 through the band filter BF to the modulator M where it is modulated by the fundamental frequency taken from the oscillator 40 through the transformer 42. The modulated output goes through the sending filter SF and over the line W_1 to the station "East". There the various frequencies are separated by band filters in the apparatus Y except that the same frequency as in the

conductors 43 at the sending station goes through the conductors 45 to an appropriate band filter BF and to the detector D where the fundamental frequency is detected and passed through the low pass filter LPF and amplifier A to the distorter H and apparatus X′ similar to X in Fig. 1. From X′ the various harmonics go over separate pairs of conductors like 27 and 28 to the receiving apparatus Y for reception, and currents of the same harmonic frequencies are modulated in the apparatus X′ for sending messages and transmitted from "East" to "West" over the line W_2.

In Fig. 6 the particular harmonic frequency appropriated for synchronizing is put on the line W_1 without being modulated and is transmitted as a pure unmodulated current of the harmonic frequency. At the receiving end this current goes through the appropriate band filter BF to a modulator M. Its frequency is nd where d is the fundamental frequency and n is a positive integer.

The modulator M also receives from a local source, as will be explained presently, a current of frequency $(n\pm1)d$, and therefore in the output from the modulator M there is a component of frequency d. This component only is passed by the low pass filter LPF whose output is connected to the input of the vaccum tube oscillator 46.

This oscillator 46 is adjusted so that its natural frequency is as nearly as practicable equal to the frequency d. Therefore when the frequency d is impressed on its input, the oscillator 46 will be forced to exactly that frequency.

The output from the oscillator 46 goes through the transformer 47 and the distorter H to the apparatus X′ from which the line W_2 leads from "West" to "East". Also from X′ in separate circuits, such as 27 and 28, the locally generated harmonic frequencies are taken to apparatus Y for reception. Furthermore, by means of the conductors 48, one such locally generated harmonic current of frequency $(n\pm1)d$ goes to the modulator M where its effect has already been explained.

In Fig. 7 the pure harmonic frequency current for synchronizing is put on the line at station "West", the same as in Fig. 6, but at station "East" the received current of this frequency is not put through a modulator but is applied directly to the input of the vacuum tube oscillator 46. The natural frequency of this oscillator 46 is as nearly as practicable adjusted to be equal to d, whereas the input frequency is nd. The application of the harmonic frequency nd to the input of this oscillator adjusted rather closely to the natural frequency d forces the said oscillator to operate at precisely the frequency d.

The output from the oscillator 46 goes through the distorter H and the apparatus X′ which operate in the manner already described for those elements in earlier figures of the drawings.

In Fig. 8 at station "West" two different harmonic frequency components are taken off through the conductor pairs 43 and 43′ and are superposed on the line W_1. At station "East" these two harmonic frequencies are passed through the conductor pairs 45 and 45′ and appropriate band filters BF, and then these harmonics are combined in a beat rectifier whose component of lowest frequency will be the difference of frequency between the two harmonics already referred to. This difference is equal to the fundamental frequency of the system and is passed by the low pass filter LPF to the amplifier A whose output goes through the distorter H to the apparatus X′ where its effect and utilization are as already described for similar apparatus X and X′ in other figures of the drawings.

At station "West" in Fig. 9 a plurality of vacuum tube oscillators such as 48, 48′ and 48″ are coupled successively through the resistances such as 49′ and 49″. These oscillators are adjusted as nearly as practicable so that the natural frequency of one of them is a certain comparatively low frequency fundamental, and the others are harmonics thereof. By virtue of the couplings through the resistances such as 49′ and 49″ the battery of oscillators are forced so that they operate precisely at the harmonic frequencies just mentioned and which would be realized only approximately if the oscillators had no connection with one another.

The various voltages from the various oscillators are taken off across the resistances such as 49, 49′ and 49″ and the condensers 95, etc. These are respectively in quarter phase relation, and each pair of quarter phase voltages are impressed upon the grids of two push-pull vacuum tubes which, presenting a substantially infinite impedance to these voltages, draw no current and, therefore, do not disturb the phase relation. The output currents of these respective phases are led to sending networks through separate independent transformers where they are modulated in the manner described earlier and then transmitted through sending filters which are common to both phases and thence superposed in the common line W_1. The output currents in quarter phase relation are also available over branch circuits 30 and 31 as a supply for reception of the incoming signals received over line W_2. Inductances 96, etc., each in series with a resistance 49 and a condenser 95 above referred to, are adjusted to neutralize the negative reactance of the plate filament circuit. The resistances such as 92, 94 are very large. They serve to maintain a high

voltage across the oscillating circuits such as 93.

One harmonic voltage, as from the oscillator 48″, is taken off across the resistance 49″, and after passing through the filter SF is put on the line without having any message signals impressed thereon.

At the station "East" this last mentioned particular harmonic frequency goes over the conductor pair 45 through an appropriate band filter BF to the transformer primary 53.

The battery of oscillators such as 50, 50′ and 50″ are adjusted as nearly as practicable to have the same natural frequencies as the respective oscillators at the station "West" such as 48, 48′ and 48″. One of these oscillators 50″ is adjusted to have as nearly practicable the same frequency as the oscillator 48″ from which the pilot frequency for synchronizing purposes was drawn. The input circuit of the oscillator 50″ comprises a coil 52 which is made the secondary to the primary winding 53 already mentioned. Thus the synchronizing frequency transmitted over the line W_1 is applied to the oscillator 50″ and forces it to operate precisely at that frequency. Then by virtue of the resistance couplings between successive oscillators such as 51′ and 51″, the whole battery of oscillators at station "East" is forced to operate at the same respective frequencies as for the oscillators at station "West".

The output circuits from the respective oscillators 50, 50′, etc., go through filters and sending networks for transmitting over the line W_2, and also by branch circuits such as 27 and 28 these frequencies go to the apparatus Y where they are employed for reception.

I claim:

1. In combination, a transmission line incapable of transmitting currents of relatively low frequency, apparatus at two places to be synchronized at a relatively low frequency, means for generating a harmonic current at one of those places and transmitting it over said line and applying it at the other place to synchronize the apparatus thereat with the apparatus where the said harmonic current was generated, means for generating other harmonic currents at one of those places and transmitting them over said line, and means for phase-splitting each of said other harmonic currents and transmitting and receiving respective messages on the resultant components.

2. In a multiplex carrier current system, a line, means to generate a composite alternating current of a certain fundamental frequency and to separate the component currents of other frequencies to respective channels associated with said line, means at the sending end to modulate one of the higher frequency component currents at the rate of the fundamental, means at the receiving end governed by the said currents so modulated to control the generation of a current corresponding to the composite current generated at the other end of the line, and means to separate the component currents of other frequencies to respective channels at said other end of the line and transmit them in the reverse direction.

3. In a multiplex carrier current system, a line, means at one station on the line to generate alternating currents of various frequencies and to separate them into respective channels and modulate them respectively for signaling and to modulate specially one such component current at the rate of the lowest frequency and to put all the modulated currents on said line, and means at another station on the line governed by said specially modulated current to generate a set of currents for sending in the reverse direction and for homodyne reception.

4. In a multiplex carrier current system, a line, means at one station on the line to generate a composite alternating current of a certain fundamental frequency, means to separate its components to various conductors and to modulate them for signaling and specially to modulate one such component regularly at the rate of the fundamental alternating current and to put all the components so modulated on the line, and means at another station controlled by said specially modulated component current to generate an alternating current like that generated at the first mentioned station, and in definite phase relation therewith whereby its components will also be in definite phase relation with the said components of the current generated at the first mentioned station.

5. In a multiplex carrier current system, a line, means at one station on the line to generate a composite alternating current of a certain fundamental frequency, means to separate its components to various conductors and to modulate them for signaling and specially to modulate one such component regularly at the rate of the fundamental alternating current and to put all the components so modulated on the line, and means at another station controlled by said specially modulated component current to generate an alternating current like that generated at the first mentioned station, and means to utilize said alternating current generated at said other station for multiplex sending in the opposite direction.

6. In a multiplex carrier current system, a line, means at one station on the line to generate a composite alternating current of a certain fundamental frequency, means to separate its components to various conduc-

tors and to split each such component according to phase and to modulate the final components for signaling and specially to modulate one such component regularly at the rate of the fundamental alternating current and to put all the components so modulated on the line, and means at another station controlled by said specially modulated component current to generate an alternating current like that generated at the first-mentioned station, and means to utilize the components of said alternating current generated at said other station for homodyne reception thereat.

7. In a multiplex carrier current system, a line, means at one station on the line to generate a composite alternating current of a certain fundamental frequency, means to separate its components to various conductors and to modulate them for signaling and specially to modulate one such component regularly at the rate of the fundamental alternating current and to put all the components so modulated on the line, and means at another station controlled by said specially modulated component current to generate an alternating current like that generated at the first-mentioned station, and means to utilize the components of said alternating current generated at said other station for homodyne reception thereat and for multiplex sending in the opposite direction.

8. In a multiplex carrier current system, a line, means at one station to generate a composite alternating current of a certain fundamental frequency, means to separate its components to various conductors both according to frequency and according to phase and to modulate them for signaling and specially to modulate one such component regularly at the rate of the fundamental alternating current and to put all the components so modulated on the line, and means at another station controlled by said specially modulated component current to generate an alternating current like that generated at the first-mentioned station.

In testimony whereof, I have signed my name to this specification this 25th day of February, 1925.

ANDREW L. MATTE.