Jan. 20, 1925. 1,523,454

D. N. SHEPHERD

MEANS FOR IONIZING AND VOLATILIZING THE EXPLOSIVE MIXTURE WITHIN THE COMBUSTION CHAMBER OF AN INTERNAL COMBUSTION ENGINE

Filed Oct. 30, 1922

Fig. 1.

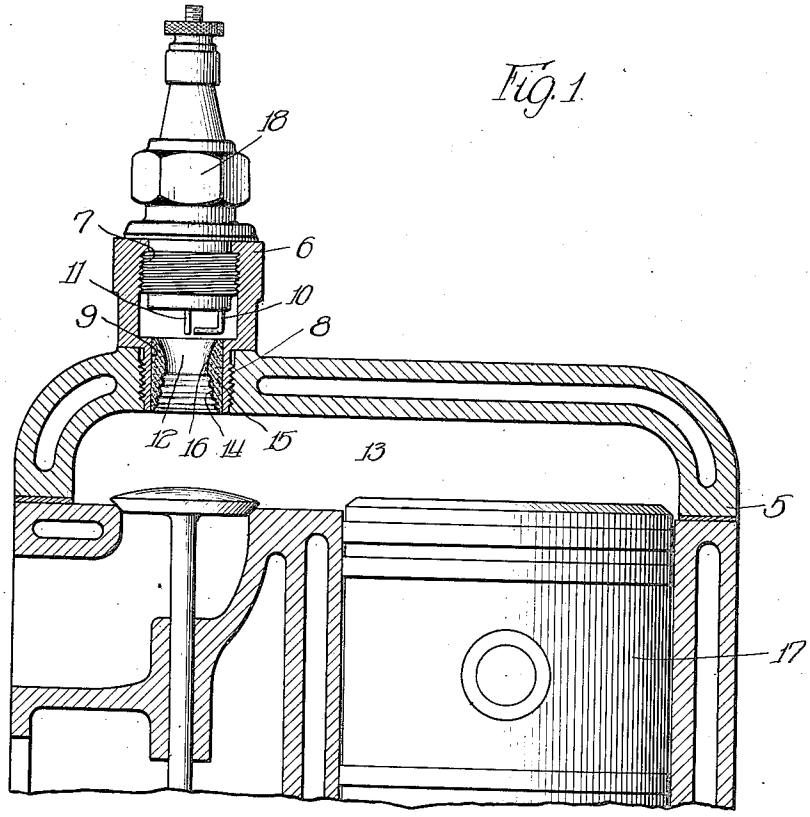

Fig. 4

Fig. 2

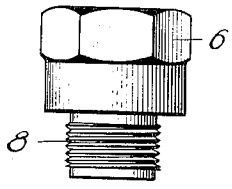

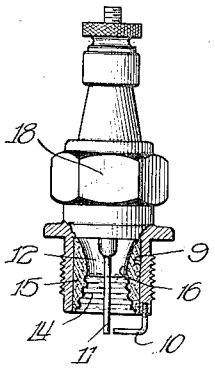

Fig. 3

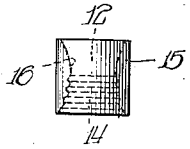

Inventor:

Donald N. Shepherd

Patented Jan. 20, 1925. 1,523,454

UNITED STATES PATENT OFFICE.

DONALD N. SHEPHERD, OF CHICAGO, ILLINOIS.

MEANS FOR IONIZING AND VOLATILIZING THE EXPLOSIVE MIXTURE WITHIN THE COMBUSTION CHAMBER OF AN INTERNAL-COMBUSTION ENGINE.

Application filed October 30, 1922. Serial No. 597,982.

To all whom it may concern:

Be it known that I, DONALD N. SHEPHERD, a citizen of the United States, residing at Chicago, in the county of Cook, State of Illinois, have invented new and useful Improvements in Means for Ionizing and Volatilizing the Explosive Mixture Within the Combustion Chamber of an Internal-Combustion Engine.

My invention, which I have termed the radion, has for an object to prevent oil or fuel of any kind from coming in direct contact with the spark plugs of an internal combustion engine, in a liquid or semi liquid state.

A further object of my invention is to introduce heat into the explosive mixture in the combustion chamber before this mixture is fired, by means of radioactive elements and also heat retaining elements.

Further objects are to enhance the propagation of flame within the combustion chamber by means of radioactive elements; to expand the explosive mixture within the combustion chamber before this charge is ignited, thus effecting a higher compression in the cylinder head; to place within the combustion chamber a heat retaining element in conjunction with radioactive elements, thus making both elements more effective; to eliminate carbon deposits from the sparking device within the combustion chamber; to reduce the electrical resistance of the gases within the combustion chamber by means of alpha rays emanating from radioactive elements, thus making the sparking device more effective; to charge the gases within the combustion chamber with electrons or alpha and beta rays; and to vaporize, volatilize, and ionize the explosive charge therein, thus increasing the efficiency of the engine.

Further objects and advantages will be apparent when reference is had to the accompanying drawings, which show only two embodiments of my invention, and wherein—

Figure 1 is a vertical sectional view of the invention when used in combination with a spark plug.

Figure 2 is a full elevation of Figure 1.

Figure 3 is a view of the Venturi tube.

Figure 4 shows the invention incorporated in a spark plug.

Referring specifically to the drawings, wherein like numbers indicate like parts, the invention consists of a device which is adapted to be screwed into the usual spark plug aperture of an internal combustion engine cylinder, a portion of which is shown at 5. The device comprises a body portion 6 of hexagonal or other suitable contour, having an internally threaded portion 7, the threads of which match those of a spark plug so that the spark plug may be screwed thereinto, and an externally threaded end portion 8 matching the threads of the spark plug aperture in the cylinder and adaptable to be screwed thereinto. The device is chambered at 9 to accomodate the spark plug electrodes 10 and 11 and also to accomodate the Venturi tube 12. The Venturi tube 12 is composed of stone, clay, or any heat retaining element 15, sufficiently porous to accomodate a surface of radioactive elements 16. The venturi 12 is corrugated in one end 14 to form a greater radiating surface and to trap and distil off or vaporize any liquid oil or carbohydrates in liquid or semi liquid form which may be present in the explosive charge.

It is known that radioactive elements such as platinized tripoli, thorium, uranium, and pitchblende maintain high temperatures when heated and produce flameless combustion when subjected to a flow of combustible gases, and that they give electrical conductivity to gases. It is known also that these elements increase the volume and reduce the density of combustible gases, and that they emit spontaneously rays consisting, at least in part, of material particles traveling at high velocity. These particles are known to be electrons, the alpha rays giving off positive electrons, and the beta rays projecting negatively charged electrons traveling at much higher velocity. Obviously then the gases passing through this device will become charged with electrons traveling at high velocity resulting in enhancing the propagation of flame after the charge is ignited. The gases will also become ionized or a conductor of electricity, thus causing the sparking device to become more effective, and allowing for a wider gap between the electrodes of the sparking device. The volume of the gases will be increased by the radiant heat from the ra-

dioactive elements and also from the heat retaining element, which will result in a higher compression in the cylinder head.

It is a known fact that heat when applied to combustible gases, such as are used in internal combustion engines, will expand these gases. Heat has been applied in various forms to the explosive mixture in internal combustion engines, but for the most part it has been applied to the charge before entering the combustion chamber, thus expanding the charge previous to its entrance in the combustion chamber, with a consequent loss of volumetric efficiency and power.

It is obvious now that when my invention is interposed between the spark plug 18 and the combustion chamber 13, part of the explosive charge in the combustion chamber will be compelled to pass through the Venturi tube 12 on the compression stroke of the piston 17, and will be charged with electrons, alpha and beta rays, and heat emanating from the the radioactive elements 16 and the element 15, and will become ionized, increased in volume, more volatile, less dense, and consequently more combustible.

It is known that a Venturi tube, while presenting more inner surface, also presents less restriction to the flow of gases than a tube of the same size of any other shape. My invention does not deflect any of the charge from the sparking device but allows the same free passage that exists without its use. In my invention there is no baffle wall, and no auxiliary combustion chamber other than that formed by the Venturi tube; consequently there is no restriction to the flow of gases and no tendency for burned gases to remain near the sparking device, thus preventing the spark from igniting the combustible charge.

I have tested this device and found that a properly calculated mixture of radioactive elements and heat retaining elements, used in the manner described greatly increases the efficiency of the engine in fuel economy, power, and freedom from carbon deposits, and does not result in preignition.

This invention is an improvement on a previous invention of mine. I refer to application for Letters Patent 582684, filed August 18, 1922.

Having fully described my invention what I claim is:

1. An internal combustion engine comprising a cylinder, a piston, a combustion chamber, and a device comprising a fitting adapted to be screwed into the usual spark plug aperture in the cylinder and in communication with the combustion chamber, said device consisting of a body portion threaded on its outer end to accommodate a spark plug, and threaded on its inner end to match the usual spark plug aperture in the cylinder, and forming a chamber designed to accommodate a Venturi tube, and a Venturi tube located in said chamber, said Venturi tube comprising a heat resisting and heat retaining element surfaced on its inner surface with radioactive elements and corrugated on one end of its inner surface.

2. An internal combustion engine comprising a cylinder, a piston, a combustion chamber, and a device comprising a fitting adapted to be screwed into the usual spark plug aperture in the cylinder and in communication with the combustion chamber, said device consisting of a body portion threaded on its outer end to accommodate a spark plug and threaded on its inner end to match the usual spark plug aperture in the cylinder, and forming a chamber designed to accommodate a Venturi tube, and a Venturi tube located in said chamber, said Venturi tube comprising a heat resisting and heat retaining element surfaced on its inner surface with radioactive elements.

In witness whereof I have hereunto set my hand and seal.

DONALD N. SHEPHERD. [L. S.]