United States Patent

[11] 3,614,069

[72] Inventor Edward J. Murry
Palos Park, Ill.

[21] Appl. No. 859,731
[22] Filed Sept. 22, 1969
[45] Patented Oct. 19, 1971

[73] Assignee Fibra-Sonics, Inc.
Chicago, Ill.

[54] MULTIPLE FREQUENCY ULTRASONIC METHOD AND APPARATUS FOR IMPROVED CAVITATION, EMULSIFICATION AND MIXING

21 Claims, 12 Drawing Figs.

[52] U.S. Cl. 259/1, 259/DIG. 44
[51] Int. Cl. B01f 11/02
[50] Field of Search ..... 259/1, DIG. 43, 72, 99, DIG. 44; 68/355; 134/1

[56] References Cited

UNITED STATES PATENTS

2,714,186	7/1955	Henrich	259/1
3,176,964	4/1965	Cottell	259/1
3,169,013	2/1965	Jones	259/1
3,301,535	1/1967	Brown	259/99

Primary Examiner—Robert W. Jenkins
Attorney—Hill, Sherman, Meroni, Gross & Simpson

ABSTRACT: Method and apparatus for obtaining a state of cavitation, emulsification and mixing wherein materials are subjected to a band of ultrasonic frequencies which are gradually shifted downwardly to cause bubbles in the material to grow and then applying a second set of ultrasonic frequencies but of a much lower frequency and of a higher intensity than the first ultrasonic frequencies for causing the bubbles to expand to a size such that catastrophic collapse takes place. The low-frequency ultrasound is also varied in frequency so as to cause the bubbles to collapse and implode. In this case, the lower frequency is caused to increase in frequency by periodically sweeping the lower frequency upward. The method and apparatus provide improved cavitation, emulsification and mixing of substances as, for example, water-in-oil.

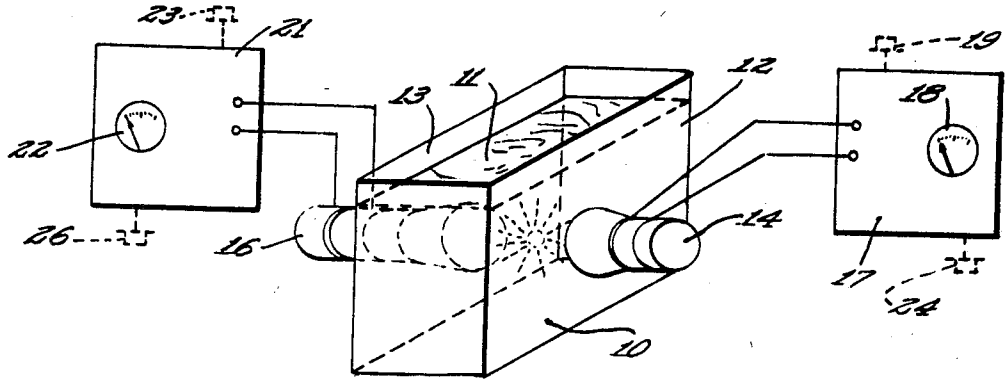

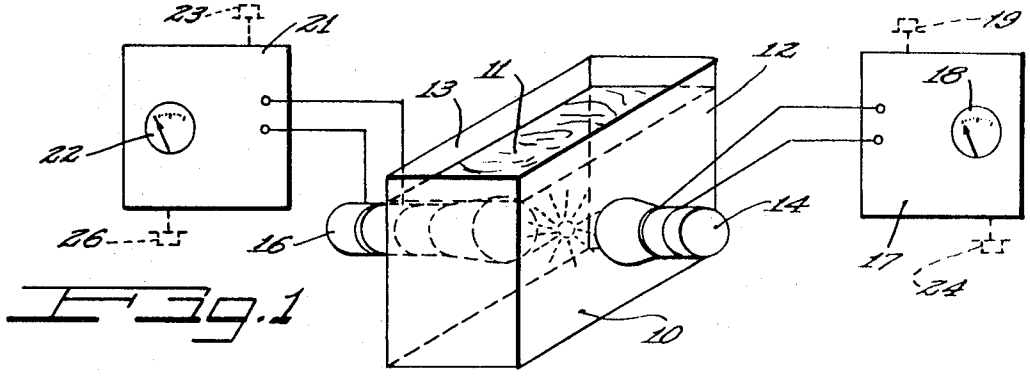

Fig. 1

Fig. 2

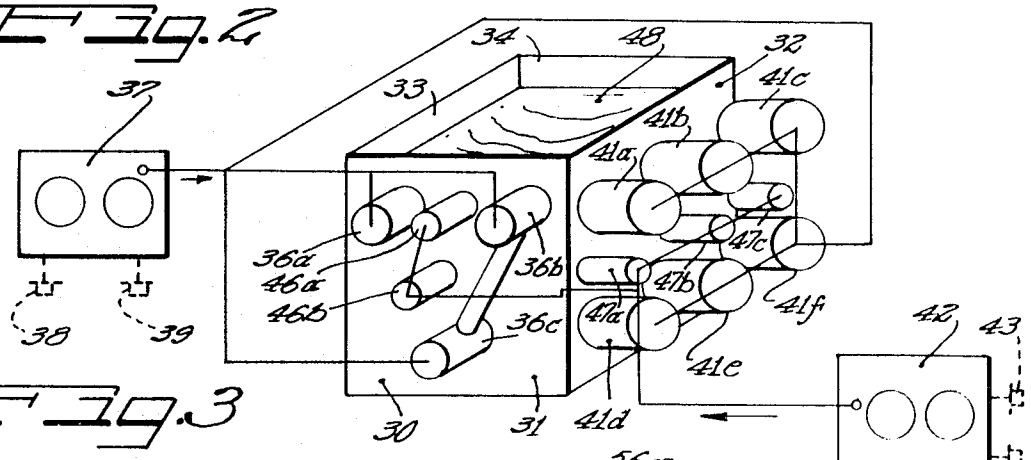

Fig. 3

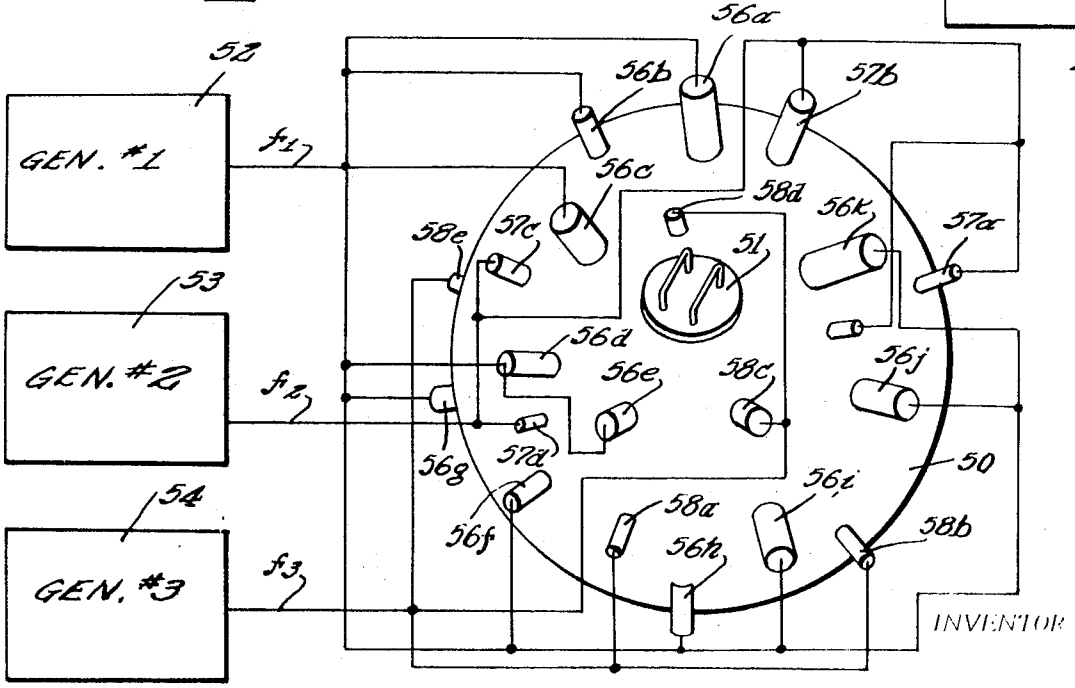

Edward J. Murry

BY Hill, Sherman, Meroni, Gross & Simpson ATTORNEYS

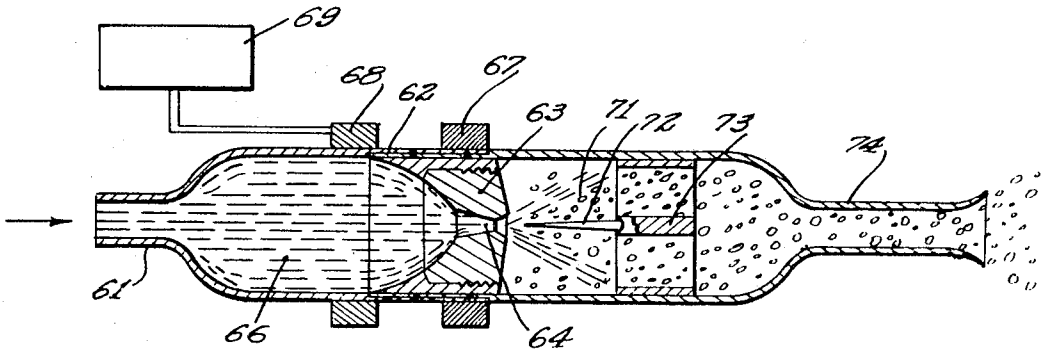

Fig. 4

Fig. 5

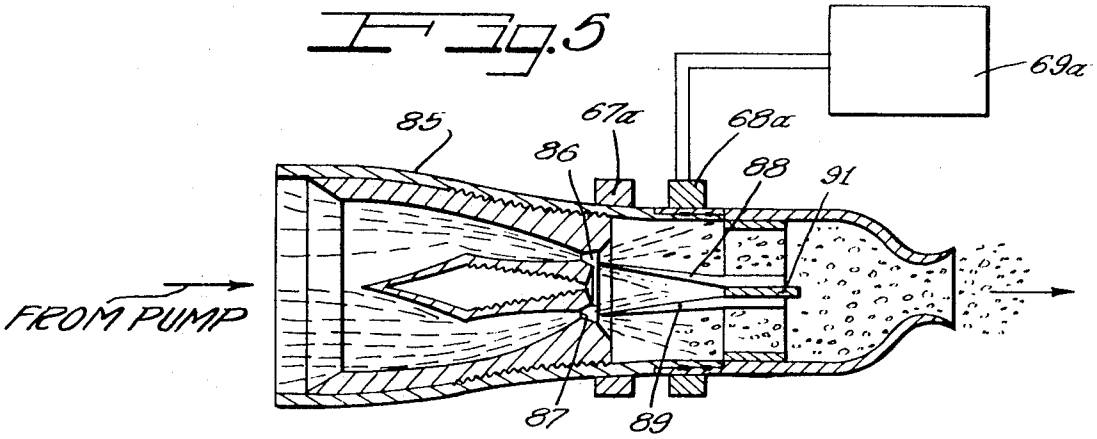

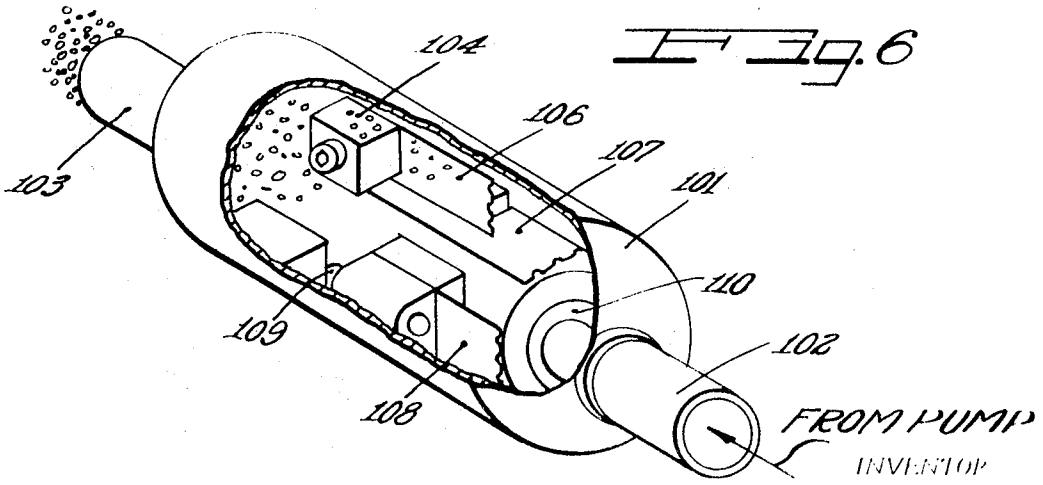

Fig. 6

INVENTOR
Edward J. Murry
BY Hill, Sherman, Meroni, Gross & Simpson ATTORNEYS

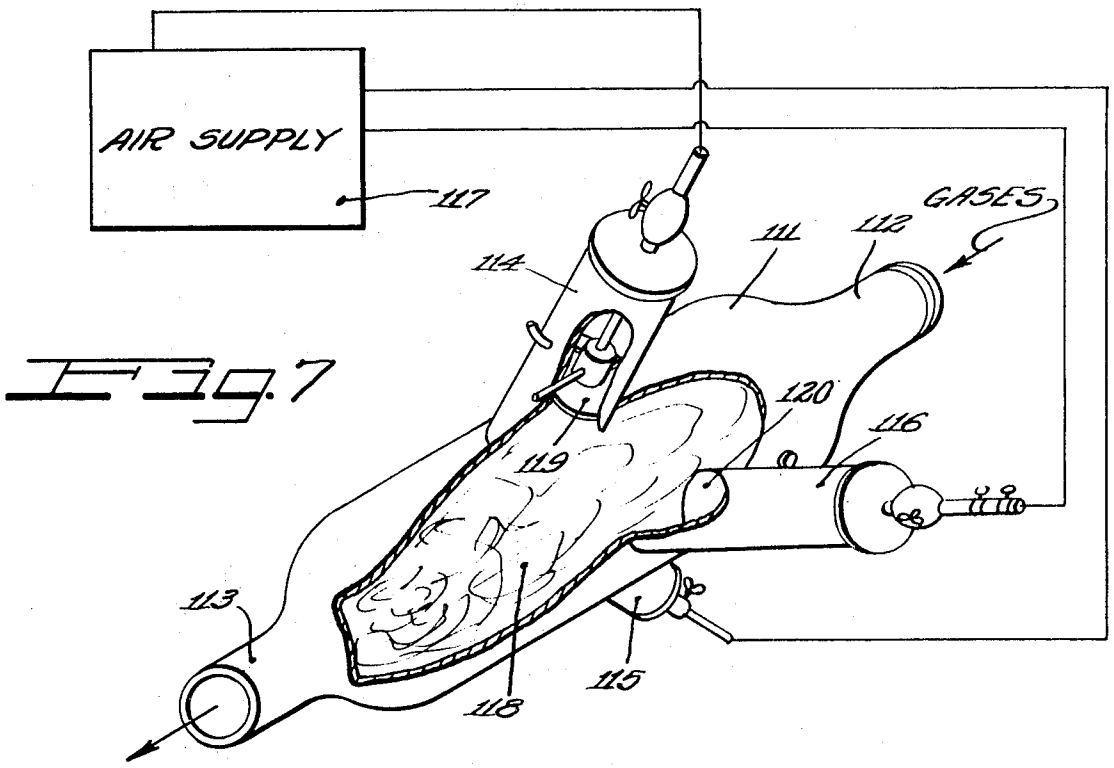

Fig. 7

Fig. 8

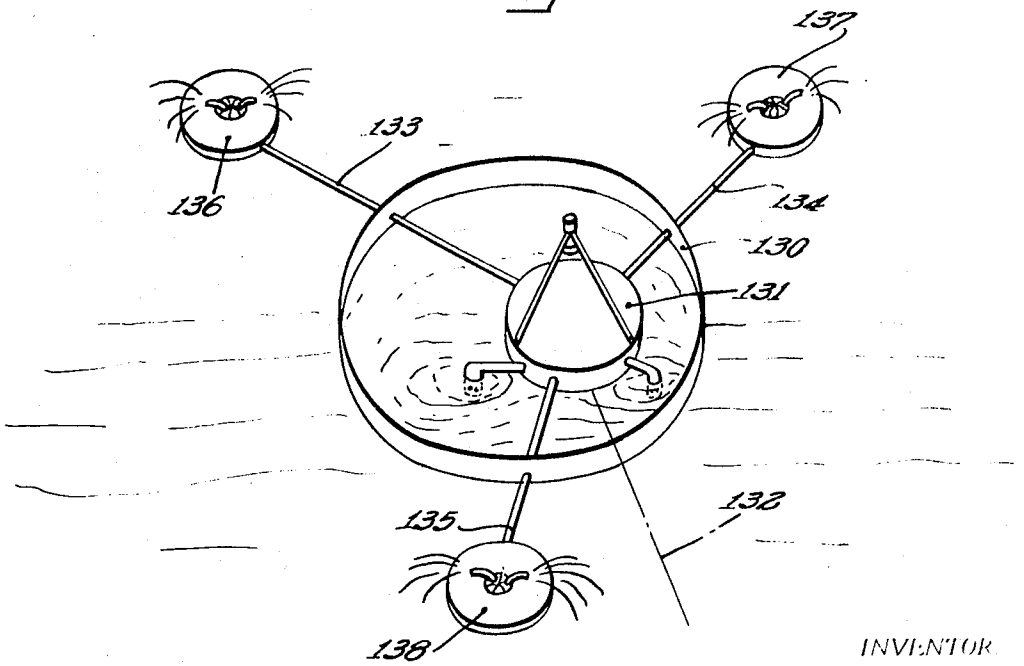

INVENTOR

Edward J. Murry

BY Hill, Sherman, Meroni, Gross & Simpson ATTORNEYS

Fig. 9

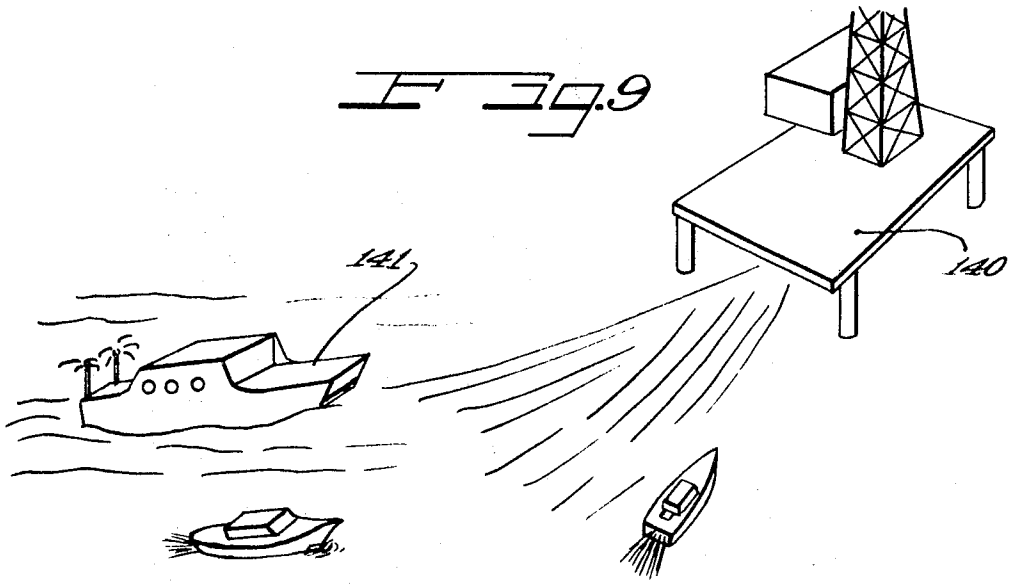

Fig. 10

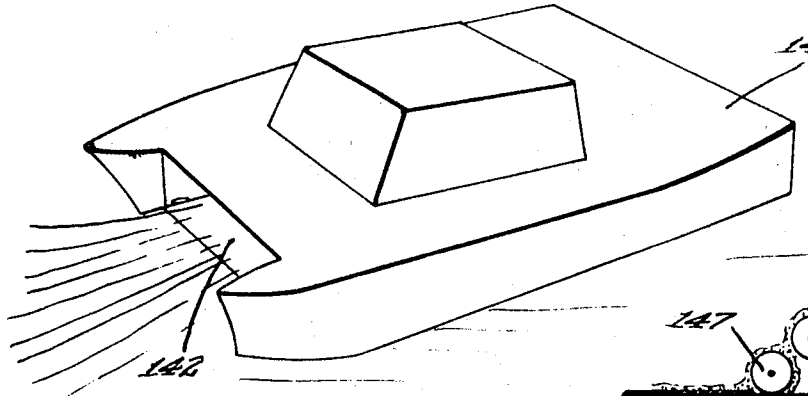

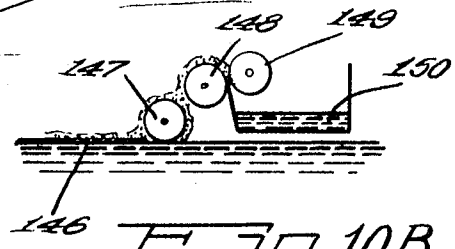

Fig. 10B

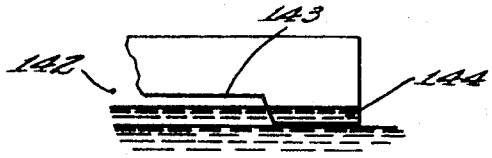

Fig. 10A

INVENTOR
Edward J. Murry

BY Hill, Sherman, Meroni, Gross & Simpson ATTORNEYS

MULTIPLE FREQUENCY ULTRASONIC METHOD AND APPARATUS FOR IMPROVED CAVITATION, EMULSIFICATION AND MIXING

BACKGROUND OF THE INVENTION

1. Field of the Invention

This invention relates, in general, to cavitation, emulsification and mixing apparatus and method.

2. Description of the Prior Art

A great deal of work has been done on cavitation and emulsification theory and many successful machines have been built but the exact reasons for emulsification have not been discovered. The literature simply attributes the phenomena to a cavitation of high intensity induced by the insertion of ultrasonic energy. Certain research has tended to show that the simultaneous application of several ultrasonic frequencies leads to superior cavitation and two-frequency cavitation units have been built. Certain of these prior experiences have shown that certain operations such as emulsification and biological alteration could not be carried out successfully without the simultaneous use of at least two ultrasonic frequencies being inserted into the same volume of fluid and then being "beamed" into each other; i.e., injected onto the same axis and into the same volume of fluid. These prior units which merely injected two different frequencies into a fluid were unpredictable and did not produce the much improved results of the present invention.

SUMMARY OF THE INVENTION

In the present invention the method and apparatus for improved cavitation, emulsification and mixing is accomplished by subjecting the material to a primary high frequency source of ultrasonic energy which is gradually changed in frequency downwardly to cause bubbles inherent in the material to grow and to change. As each group of bubbles grows they are selectively captured and enlarged by the next cycles of ultrasound which are of a slightly longer period; in other words, have a longer wavelength; i.e., lower frequency. This is accomplished in a first phase, or initial stage of cavitation (and of emulsification), during which time the various sized microbubbles available are captured, held in place and are made to grow in size. They do not move around to any great extent in the fluid or liquid since they are held in place by the continuously applied ultrasonic waves. Instead, they vibrate in place until they reach a size which is in exact balance with the cohesive forces of the surrounding medium, at which time the vibration of the bubbles decreases or ceases its growth action.

If the high frequency ultrasound alone was all that was available, some bubbles (as is well known) would still experience catastrophic collapse, since some true ultrasonic vapor, and void cavitation, could occur. However, such small growth can do little, if any, toward the generation of the severe shock waves which are needed to clean surfaces or to fracture molecules apart. In the present invention, by using a second set of ultrasonic frequencies, but of a much lower frequency and of a higher intensity, (from 40 kilohertz to 50 kilohertz, for example) it is possible in a single cycle to pick up, capture and expand the newly available bubbles (which were generated by the high frequency ultrasonic generator) to a size such that catastrophic collapse must immediately take place. The growth will occur in approximately one-quarter of a cycle of the applied signal and during the the next half cycle (from 90° to 270°) the bubbles will collapse (implode). Since the bubbles which were produced earlier have varying sizes, increasing the frequency upward (in the opposite direction to the high frequency sweep) results in improved cavitation, emulsification and mixing, since we now produce a myriad of large diameter, collapsing shock wave generators; i.e., imploding bubbles.

For forming an emulsion the apparatus and equipment becomes more complex since two distinct fluids (or one fluid and small particles of solids; such as dirt, lamp black, etc.) which require different high and low frequency ranges to: (1) cause microbubble growth and/or in-place resonance; and (2) the capture and then rapid high energy growth to an intermediate catastrophic destruction and thereby finally to the generation of strong shock waves (needed to effect molecular ionization and/or fracture) which are required to accomplish emulsification.

Highly effective emulsification can be readily accomplished by the use of four varied ultrasonic frequencies (in pairs of two). Further, it has been discovered that large increases in efficiency can be achieved by using three or four staggered variable frequencies (each operating over a small range) of ultrasonic waves so as to completely cover all possible sizes of bubbles or particles in the liquids from small bubbles of perhaps one or two microns in size up to perhaps those of 0.033 inches in diameter. The very small bubbles might require a "-startup" frequency as high as 500 megahertz while the second phase larger bubbles could require a final "breakup" frequency of about 5 kilohertz.

It is an object of the present invention therefor to provide a cavitation and emulsification apparatus capable of obtaining precise, exact and economical cavitation and emulsification of any selected materials as, for example, crude oil and sea water, crude oil with other materials and all forms of petroleum and other materials.

Another object of the invention is to provide a mechanism and apparatus for giving emulsifications by enhanced and precise operations far superior to previous emulsification devices.

A further object of the invention is to provide superior cavitation in liquids or in a mixture of liquids under the influence of ultrasound or in gases.

A still further object of the invention is to provide superior mixtures of gaseous substance; either with or without contained solid particulate.

Other objects, features and advantages of the invention will be readily apparent from the following description of certain preferred embodiments thereof, taken in conjunction with the accompanying drawings, although variations and modifications may be effected without departing from the spirit and scope of the novel concepts of the disclosure and in which:

BRIEF DESCRIPTION OF THE DRAWINGS

FIG. 1 is a block diagram of the improved apparatus of the invention in its simplest form; using piezoelectric or magnetostrict sonic-motors;

FIG. 2 illustrates a more complex modification of the invention;

FIG. 3 illustrates a further modification of the invention for extreme intensities;

FIG. 4 illustrates a liquid jet apparatus with the invention added, driven by a high-pressure pump;

FIG. 5 illustrates a modification of the invention using dual jet-edges;

FIG. 6 is a partially cutaway view of the apparatus illustrating a modification of the invention wherein four jet-edges are used with the invention (two not shown);

FIG. 7 is a partially cutaway illustration of a further modification of the invention using the principle on a gas mixer;

FIG. 8 is a perspective view of the invention applied to an inplace sea water/oil emulsifier;

FIG. 9 is a view of mobile apparatus for the emulsification of sea water/oil;

FIG. 10 is a detail view of the heavy-duty emulsifier of FIG. 9 with a large capacity;

FIG. 10A is a detail view illustrating how a skimmer-scoop of the heavy-duty emulsifier could operate; and

FIG. 10B is a further detail of the apparatus of the heavy-duty emulsifier using a reticulated steel-foam sponge roller as an oil collector and transfer device.

DETAILED DESCRIPTION OF THE PREFERRED EMBODIMENTS

As populations have become greater and greater and the use of machines has increased, the earth's atmosphere, surface and water resources have become more and more contaminated. For example, spillage and leakage of oil in the seas and lakes has been a major problem in that the oil does serious damage to marine life and beaches. It is very difficult to remove oil from the sea and such techniques as burning the oil, or picking it up with simple skimmers and then separating it, has proved impractical. The present invention, including method and apparatus for improved cavitation, emulsification and mixing, may be applied to decontaminating large bodies of water containing oil, for example, wherein the oil and water mixture is effectively emulsified and stabilized. The oil particles by this method are broken into particles so small that they disperse infinitely and no longer stick together behaving like water, and are no longer injurious. The present invention allows emulsification and/or mixing of liquids, fluids, gases, vapors and particulate so cheaply as to permit efficient removal of oil and other contaminants.

As sound waves pass through a given fluid, regions of rarification and compression are established in a regular sequence. In a rarification region, a negative pressure will exist, depending on the cohesive forces and the local pressures holding the fluid together. These forces vary with the materials. Air, vapor or void cavities will exist and will be effected by the ultrasonic waves present. These cavities will be caused by local discontinuities of one sort or another; such as microbubbles, particles of impurities, or of structural weaknesses of the molecules present.

It is important to note that for any given fluid at a given pressure and temperature and of equal impurity; in other words containing the same and similar particles and dissolved amount of gases, that there will be a range of possible bubble sizes which is governed by the viscosity and cohesive forces present. For any given ultrasonic frequency, there is an upper limit to the size of bubbles that will be formed; however, there is approximately no lower limit. It is also known that some viscous fluids cavitate at a much lower acoustic pressure than do others, but occasionally fluids of higher viscosity will cavitate easier than will those of lower viscosity which appears to be an anomaly. For example: castor oil (of poise units 6.3) starts to cavitate at an acoustic pressure amplitude of only 3.9 atmospheres, while whale oil of a much lower viscosity (poise rating of but 2.5) requires a very high pressure of ultrasound to create the start of cavitation; somewhere around 8.9 atmospheres. This data is at variance with the hypothesis that viscous forces determine the bubble growth potential and eventually the cavitation threshold.

Another factor of interest is that whale oil has very few local weaknesses (when pure); holds few microparticles; and will not retain much dissolved gas. For these reasons, few microbubbles are available for commencing cavitation; i.e., the first stage of in-place, rectification diffusion, via the in-place resonance/pumping-up mechanism. However, by increasing the ultrasound frequency to a high value (then normal) advantage was taken of the only voids available; those which were very tiny in cross sectional diameter. Then, by varying the frequency downward at a rapid shift rate (some thousand times per second) bubbles were induced to appear which could then be captured selectively by the low frequency high energy source. It has been discovered that it is only necessary to know the cross sectional diameter of the available cavities (under the conditions that prevail) in the fluid that one wishes to cavitate to obtain highly effective cavitation in that fluid by a selective choice of frequencies.

Prior art has stated that as frequency increases the production of cavitation in liquids becomes more difficult, ceasing altogether at a very high frequency. The reason for this was that since the period of the wavelength was very short, the time duration during which the sound waves could act, also was short and hence the period of energy input was insufficient to take the available voids to a final growth-collapse state. I have discovered that bubbles under high frequency excitation grow to a size corresponding to the resonance of the available wavelength, but then cease to grow and merely vibrate in place with no further growth to disruption being possible. If the fluid has sufficiently low viscosity the frequency at which cavitation ceases is, of course, higher. However, these high frequency induced cavitations are weak since bubbles cannot grow to any great size before rupture. If, on the contrary, a lower frequency of ultrasonic energy is also present, cavitation starts, becomes quite strong and continues vigorously; however, without the presence of the proper high frequency ultrasonic energy at the same time, the cavitation becomes much less severe and four to eight times the amount of energy is required to cause cavitation than with the two frequency method. In fact, some fluids will not cavitate at all unless two frequencies are present.

The major mechanism of cavitation onset is therefor caused by resonating bubbles of a wavelength of ultrasound which is close to or somewhat less than that of the cross sectional diameter of the available voids or bubbles at the startup time—which, in turn, is specific to the fluid used, and its condition at the time of ultrasonic radiation. Once cavitation is started, it is then carried to a stage where it can be effectively collapsed by the lower ultrasonic frequency of higher energy. It has been discovered that all fluids can be cavitated somewhat by very low frequencies such as 10 kilohertz; but this is true only if there are some higher harmonics and large impurities present. As fluids become more "pure" and the waveform used has fewer harmonics, cavitation ceases. I have discovered that it is not "one" frequency which the "best" for causing cavitation, emulsification and mixing of any one fluid, but a small band of frequencies of narrow wavelength distribution having periods correlative to the cross sectional capture ratio of the small cavities available for growth in the fluid that is being cavitated. For example: a distribution in size of the voids present in a media of from 5 microns to 20 microns (very small for most fluids) requires a theoretical frequency spectrum at the high end of 400 megahertz, varying downward to at least ten megahertz, to cause capture and subsequent secondary growth of the bubbles. By then subjecting the fluid to a lower ultrasonic energy of about one megahertz, bubbles would grow to about 100 microns in size (assuming that the one megahertz frequency contains many harmonics to enable smooth capture of the new bubbles which will continue to grow even further and finally collapse).

I have found that the use of ultrasonic frequencies, rich in harmonics, allows the entire spectrum to be covered for the capture/transfer frequencies for all sizes of donated bubbles. It should be noted that while some cavitation exists at the higher frequencies, (since some bubbles will almost always be in the media which are able to resonated at those frequencies) the generation of high ultrasonic energy is difficult and costly; and therefore it should be used only to start the growth of bubbles and then subject the bubbles to a lower ultrasonic energy which may be produced far cheaper and more readily cause it to grow and rupture. A one megacycle excited void, for example, can grow to only 0.02 cms. while a bubble excited by 100 kilohertz signal can grow to a size of 0.2 cms. in size. However, bubbles will usually collapse before they ever reach this latter size and if a high enough energy of the lower frequency ultrasonic signal is used the bubble will disrupt in one single cycle. In general, the larger the bubble at the exact time of collapse, the greater the resulting shock wave that is produced and the more energy converted into work in the fluid, or at its final impact area.

The discovery of the complete mechanism of cavitational onset, transfer and one-cycle catastrophic disruption allows an easy choice of frequencies to obtain cavitation in all fluids, including viscous oils, and the heretofore economically non-cavitatable fluids. Fluids may now be cavitated very efficiently and precisely at a minimum cost. A complete understanding of

cavitation in turn allows the more complex operation of homogenization (emulsification via ultrasound) for several fluids (two or more) to be readily effected. Also, by utilizing these specific techniques, complex intermixing of nonalloyable materials and of metals with nonmetals such as oil in brass, or lead in stainless steel, can be accomplished.

By the use of the multifrequency techniques disclosed herein, emulsions previously believed impossible, may be accomplished. Thus, with the present invention, mercury may be emulsified in water, or oil-in-water or even water-in-oil.

The accomplishment of stable, complex emulsions by ultrasonic homogenization is facilitated, in some instances, by the use of a third material in addition to the two materials being "joined." However, some materials can be homogenized and will remain stable even without the third stabilizing material. The third material may be a simple surfactant, which is compatible with the two other materials in such a way as to permit them to remain bonded together for long periods of time. The application of strong collapsing ultrasonic energy causes the two primary materials to be divided into extremely fine particles so that their surfaces become very large relative to their diameters and it is to be noted that the idea of frequency capture is again of great importance. Any particles in the fluid may also be resonated, once they have been divided and made very small by the strong shock waves of the cavitation program. The finely divided particles will, of course, all have the same charge because of the way in which they were formed. The particles may be made to float in either of several liquids and by the use of the proper surfactants the process may actually be reversed. For example, crude oil may be emulsified in water (up to 75 percent of the total mixture being crude oil and still feel watery and not oily), or water may be dissolved in oil such as in mayonnaise (where 75 percent of the final product is a water-in-oil mixture). The finished emulsion will comprise a material (liquid or solid) coated by a charged-covering, in a media of the same charge and the resulting combination will be stable. The like charges will cause the particles to remain separated from each other and if small enough the particles will remain suspended due to the small gravitational forces present and being counteracted by several minute forces in the fluids; such as Brownian impact.

The method and apparatus of this invention may also be utilized to form mixtures of gases, vapors and fine metallic and other types of particles and the energies required to do this are related to the mass of the particles and the velocity of the movements imparted. If the particles are large, energy of lower frequency and greater energy must be utilized.

FIG. 1 illustrates the simplest apparatus for mixing substances according to this invention and a tank **10** contains two substances which are to be intermixed. A first ultrasonic transducer **14** is mounted to the wall **12** of tank **10** and is energized by an ultrasonic generator **17** which has a meter **18** for indicating the output frequencies and has a tuning knob **19** for controlling the output frequency of the generator. The output of the generator **17** may be swept in frequency and the frequency excursion is determined by the setting of a knob **24**. A second ultrasonic transducer **16** is connected to the wall **13** of the tank **10** and is driven by an ultrasonic generator **21** which has a knob **23** for controlling its output frequency and has a meter **22** for indicating its output frequency range. The output frequency of generator **21** may also be swept and a knob **26** controls the frequency variation of the generator **21**. It is to be noted that transducers **14** and **16** are mounted so that their energy is beamed toward each other so that the liquids within the tank **10** are excited causing cavitation and intermixing.

In use, the generators **17** and **21** may be set to produce a single frequency and a single liquid may be placed in the tank **11** to determine the best usable frequencies for that single fluid for bubble growth and disruption. The upper frequency which may be produced by the generator **17**, for example, may be determined independently the lower frequency and then homogenized generator **21** may be set to determine the best frequency for effective cross-sectional capture and catastrophic breakup. Once these frequencies have been determined for a pair of liquids the generators **17** and **21** may be set to two variable frequencies which are frequency-modulated with the generator **17** used for high frequency pump-up and the generator **21** used for low frequency capture/transfer and disruption. The frequency of generator **17** is frequency-modulated such that the high ultrasonic frequency is swept downwardly on a periodic basis and the low frequency ultrasonic generator **21** is swept upwardly on a periodic basis. By converting the generators **17** and **21** from fixed frequencies to warbled frequencies an increase in the efficiency of cavitation is achieved in the order of four to five times. It is is to be noted that the transducers **14** and **16** are broadband transducers which are required to sweep through the band of frequencies.

Thus, fluids may be caused to intermix with the apparatus of FIG. **1** in a very effective and efficient manner.

FIG. **2** illustrates a tank **30** which assures maximum cavitation with the use of multifrequency in an open tank. The tank **30** has walls **31**, **32**, **33** and **34** and a plurality of ultrasonic transducers **36***a*, **36***b* and **36***c* are mounted on wall **31** and are energized by low frequency-modulated generator **37** that has a control knob **38** for establishing its frequency range and a knob **39** for establishing its FM excursion. The output of generator **37** is also connected to a plurality of ultrasonic transducers **41***a* through **41***f* which are mounted on wall **32** of the tank **30**. A high frequency-modulated generator **42** has a pair of control knobs **43** and **44** for respectively setting the frequency range and the FM excursion and as its output connected to first high frequency ultrasonic transducers **46***a* and **46***b* mounted on wall **31** and ultrasonic transducers **47***a*, **47***b* and **47***c* mounted on wall **32**. It is to be realized, of course, that additional ultrasonic transducers may be mounted on the walls **33** and **34** if desired. The utilization of the plurality of transducers causes maximum cavitation in the tank **30** and the liquids **48** within the tank will be rapidly and efficiently cavitated (or emulsified).

FIG. **3** illustrates a further modification of the invention comprising a spherical-shaped tank **50** in which fluids to be cavitated and emulsified are placed through a loading plug **51**. Frequency-modulated generators **52**, **53** and **54** produce FM modulated outputs. Generator **52** is connected to transducer **56***a* through **56***k*. The generator **53** is connected to transducers **57***a* through **57***d* and generator **54** is connected to transducers **58***a* through **58***e*. It is to be realized that the transducers **56**, **57** and **58** are symmetrically arranged about the surface of the tank **50** so that maximum cavitation and emulsification occurs within the chamber. The generators **52**, **53** and **54** may respectively cover low frequency, midfrequency and high frequency ranges and are frequency-modulated in accordance with the invention so as to obtain the maximum efficiency of the process.

FIG. **4** illustrates apparatus modified according to this invention for mixing and emulsifying by the use of liquid jets. An input conduit **61** receives high pressure fluids to be mixed and connects to an enlarged preliminary mixing chamber **62**. A partition **63** is formed with an orifice **64** through which the liquids **66** flow. A fixed magnet **67** is mounted about the member **62** and an electromagnet **68** is connected to an energizing source **69** which applies a varying electrical current to the electromagnet **68** to modulate the magnet field within it. The orifice **64** has a resonant frequency designated as F_o A final mixing emulsification chamber **71** is formed behind the partition **63** and a blade **72** is supported so that it intercepts the fluid flowing through the orifice **64**. The blade **72** is supported from the walls of the tank **62** by mechanical supports **73** and the blade has a resonant frequency F_b and the edge of the blade has a resonant frequency of F_e (edge tones). An outlet conduit **74** is connected to the final mixing chamber **71** and the materials after emulsification pass therethrough. The magnet **68** causes the portions of the chamber to move relative to each other to vary the resonant frequency.

The liquids are subjected to the following frequencies as they pass through the final mixing chamber **71**; the frequency of the energizing pump supplying the fluids to the chamber **62**; the natural frequency of the orifice F_o; the frequency of the edge tone F_e; the resonant frequency of the blade F_b; and the frequency of the final chamber (**71**) F_c. In addition, harmonics of these frequencies are present.

FIG. **5** illustrates a modification of apparatus according to this invention which comprises a pair of jet-edged blades. A chamber **85** receives pressurized fluid from the left relative to FIG. **5** and is formed with a pair of orifices **86** and **87** which are of different sizes so that they have different resonant frequencies designated as F_{o1} and F_{o2}, respectively. A pair of blades **88** and **89** are supported by supporting means **91** so that they intercept the jets from the orifices **86** and **87**, respectively. An electromagnet **68***a* is connected to a driving generator **69***a* and a permanent magnet **67***a* is mounted about the chamber **85**. It is to be noted that in FIG. **4** that higher frequencies can be obtained by simply notching the edge of the vibrating blade **72** or the blades **88** and **89** in FIG. **5** to obtain edge tones in a manner similar to those obtained in pipe organs. Also, by making the mixing chambers twice the natural resonant frequency of the blade, additional higher frequencies may be readily obtained. The magnetic activation by the coils **68** and **68***a*, shown in FIGS. **4** and **5**, effectively change the spacing between the orifice and the blade edges so that complete groups of warbled frequencies at the lower end without a great loss of stability may be obtained. This may be done at the 60 hertz power line frequency if desired.

The twin orifice jet-edge design of FIG. **5** which uses two vibrating blades, each of different frequencies, will result in superior emulsification and by varying the distance between the jet edges and the orifices the main and the chamber frequencies may be varied. This is accomplished with the electromagnetic means **67***a* and **68***a* but could be done by any other means including mechanical cams. This causes variations in the main frequency and gives the warbled effect which is required to optimize cavitation and emulsification.

FIG. **6** illustrates a multifrequency, nonshifted design which has so many natural frequencies excited in it that it can cover almost **6**, of inherent bubble sizes available in most fluids due simply to the **6**, of the harmonics present. The chamber **101** has an inlet conduit **102** and an outlet conduit **103** at the opposite end of the apparatus. Four jet-edge blades **106**, **107**, **108** and **109** are mounted in the chamber **101** with suitable supporting structure and have notched edges to produce the high frequency edge tones. Materials to be emulsified such as water-in-oil are supplied to the inlet conduit **102** under suitable pressure and water-in-oil is readily emulsified due to the many natural frequencies in the chamber **101** caused by the four jet-edge blades which have, respectively, resonant frequencies of F_5, F_6, F_7 and $F_8$the high frequencies caused by the notches in the edges of the blades which might be designated F_{x1}, F_{y2} and F_{z3}. In addition, the chamber has a resonant frequency of F_c. In addition, a baffle **110** may be connected to the input conduit **102** and be formed with a plurality of elliptical orifices such as four elliptical orifices of different sizes and which have resonant frequencies of F_1, F_2, F_3 and F_4, respectively. The fluids passing through the chamber are subjected to the frequency of the chamber F_c, the frequency of the orifices F_1 through F_4, the frequencies of the jet-edge blades F_5 through F_8, the high frequency edge frequencies F_{x1}, F_{y2} and F_{z3}, as well as the pump frequency F_p. This causes the liquids to be emulsified in an efficient manner. It is interesting to note that in the emulsifiers of FIGS. **4**, **5** and **6** the energy is supplied entirely by the pump supplying the water-in-oil to the chamber **101** and that power is not supplied to the mixing chamber by other sources. If desired, the spacing between the blades and the orifices may also be varied in design No. 6, by magnetic means. It has been discovered that the emulsifier, according to FIG. **6**, is very efficient and emulsifies large percentages of oils up to 75 percent without this last variation parameter.

FIG. **7** is a further modification of the invention which may utilize various types of variable air whistles for sonic mixing. A chamber **111** has input orifice **112** and an output orifice **113** and has air whistles **114**, **115** and **116** mounted thereon. The air whistles are connected to a suitable air supply **117** which drives them at their resonant frequency determined by their respective physical sizes and actuates transfer diaphragms **118**, **119** and **120** in each of the air whistles **114**, **115** and **116** to induce sound waves into the various material within the chamber **111**. The materials within the chamber may be gas, for example, and by the choice of correct sound frequencies the gas molecules will oscillate thus causing certain gases to be processed into liquids, semisolid or solids with high efficiency.

It is to be noted that all of the apparatuses illustrated in FIGS. **1** through **7** utilize the principle of multifrequency energization and of variable frequency shifts. It is to be realized that the techniques disclosed herein may be used to modify present cavitation, mixing and emulsifying devices to greatly increase their efficiency and, in fact, the present method is the only method which will work with many materials formerly considered much too difficult to emulsify economically die to the exceedingly high power levels required to effect the emulsification. By way of example, sea water contaminated with crude oil may be emulsified by utilizing boats which collect oil from the sea and thence pass it through the highly efficient jet-edge liquid emulsifier according to my invention as, for example, illustrated in FIGS. **4** through **6**. A suitable surfactant stabilizer may be added to the emulsified mixture at the proper time and the mixture may then be returned to the seas where it will no longer constitute a pollutant. Thus, material which was once a pollutant and very difficult and costly to remove, may be processed to an assimile biodegradable condition very cheaply and on a large commercial basis.

FIG. **8**, as but one method, illustrates a floating cylinder **130** which contains entrapped oil and sea water coming from a source beneath it, for example. An emulsifying apparatus buoy **131**, made according to my invention, and supplied with suitable power source as, for example, a cable **132**, draws in the oil in sea water and processes it in the emulsifier contained in the buoy **131** and ejects it through floating conduits **133**, **134** and **135** to suitable distant floating discharge points **136**, **137** and **138**, respectively. FIG. **9** illustrates an offshore drill rig **140** which may be mounted at sea and which is leaking oil contaminating the sea water. A heavy-duty emulsifier **141** has a front scoop as shown in greater detail in FIG. **10** which may be of the form illustrated in FIG. **10A** comprising an input orifice **142** with a substantially horizontal plate **143** which skims the oil from the sea water and passes it into a tank **144**. Alternatively, the scoop may comprise a plate **146** which skims the oil as the boat **141** moves forward and transfers it by the use of porous rotating transfer rollers **147** and **148** whereas it is squeezed off by roller **149** into a concentrating oil tank **150**. The boat **141** may be turbine driven and the collected oil/water may be passed through the pump/turbine which provides the motive power for the boat and which can supply sufficient power to drive a multifrequency emulsifier such as illustrated in FIGS. **4** through **7**, for example. After the emulsified oil/water has passed through the emulsifier, culture-type surfactant (such as sodium alginate, agar, etc.) must be added and then the material passed overboard to the rear back into the sea. Due to the method used, a large amount of inherent aeration occurs which is excellent for sea life. In extremely fine emulsified form as made by my invention (1 to 5 microns in diameter), the material is infinitely dispersible and will instantly disperse throughout the entire volume of sea and due to the currents, wind nd waves will rapidly disappear. The same method may also be used on materials other than crude oil as, fir example, for seeding the sea with desired chemicals such as vitamin B_1 enriched oil for growing stable proteins in the sea.

The method may also be used to form tight emulsions with polluting liquid or solid material and thereby give them a highly charged coated surface all of the same polarity. The

material can then readily be cleaned up at a slightly later time using static electrical forces. Thus, with the present method and apparatus, a very efficient and highly effective method of putting any materials into seas, lakes or rivers is disclosed which may be utilized to form protective layers around impurities and then remove the pollutant somewhat later and elsewhere with considerable ease such as downstream.

For example, organic wastes such as obtained in sewage, may be treated with the apparatus and method of this invention so as to reduce it to small micron sizes and with the addition of sanitizing coating additives may be converted into a collectively and readily disposable form.

It is to be realized that in the utilization of a high ultrasonic frequency, which is swept downwardly, in combination with a low frequency ultrasonic generator, which is swept upwardly, these results are produced which, in turn, result in efficient and economical cavitation. The utilization of four frequencies operated in this manner results in very efficient emulsification as described in detail above and makes the operations described possible.

I claim as my invention:

1. The method of causing cavitation in a substance comprising exciting said substance with energy at a high frequency, decreasing the frequency of said high frequency energy, exciting said substance simultaneously with energy at a lower frequency and increasing the frequency of said lower frequency energy.

2. The method of claim 1 wherein said high frequency energy and said lower frequency energy are at ultrasonic or sonic frequencies.

3. The method of claim 1 comprising applying said high frequency energy and said lower frequency energy simultaneously to said substance.

4. The method of claim 1 wherein said high frequency energy and said lower frequency energy are respectively changed in frequency in a repetitive manner.

5. The method of claim 1 wherein said high frequency energy has a frequency which causes bubbles in the substance to grow by resonating them and the bubbles become progressively larger as the high frequency energy is decreased in frequency.

6. The method of claim 5 wherein said lower frequency energy has a frequency which causes said bubbles to be captured, expand and collapse.

7. The method of clam 6 wherein the frequency of said lower frequency energy is periodically increased to cause the collapse of a substantial portion of the bubbles in said substance.

8. The method of emulsification comprising subjecting a mixture of at least two different substances to at least two high frequency energies, periodically sweeping the frequencies of said high frequency energies to lower frequencies to cause the capture and growth of the inherent bubbles in said substances, and subjecting said mixture to at least two lower frequency energies and periodically sweeping said lower frequency energies to higher frequencies to capture bubbles and cause them to grow to a catastrophic destruction size resulting in emulsification of the mixture from the strong, generated shock waves.

9. The method of emulsification comprising subjecting a mixture of at least two different substances to at least two simultaneous high frequency energies to cause the capture and growth of any bubbles in said substances, and subjecting said mixture to lower frequency energy to capture the bubbles and cause them to collapse and emulsify said mixture.

10. The method of claim 9 comprising periodically sweeping said high frequency energies to a lower frequency.

11. Means for causing cavitation of a substance comprising a variable size container for said substance, means for varying the size of said container such that the variation in size of said container varies the resonant frequency of said container, means for exciting said substance at a first, high frequency, downwardly changing so as to cause small bubbles in said substance to grow large, and means for exciting said substance at a second lower frequency and sliding it upwardly and downwardly to cause said grown bubbles to be captured and further grown to a stage of final collapse and implosion thereby releasing reverse shock waves.

12. Apparatus according to claim 11 wherein said means for exciting said substance at a first high downwardly changing frequency includes a frequency modulated ultrasonic generator of a continuously varying frequency over a finite spectral band width and a first plurality of sonic transducers mounted in said container and capable of responding to said generator's variations.

13. Apparatus according to claim 11 wherein said means for exciting said substance at a second lower sliding downward frequency comprises a frequency modulated ultrasonic generator having a finite spectral band width, and a second plurality of sonic transducers mounted on said containers and connected to said second generator.

14. Apparatus according to claim 11 comprising at least three varying band width frequency modulated generators and a plurality of transducers mounted in said container and respectively connected to said three frequency modulated generators.

15. Means for mixing substances comprising a chamber of continuously varying dimensions and having an inlet and outlet through which said substances pass and means for inherently exciting said substances at a plurality of frequencies as they pass through said chamber of varying size.

16. Means for mixing substances according to claim 15 including means for generating comprising notched vibrating blades in said chamber.

17. Means for mixing substances according to claim 15 and which said means for exciting said substances at a plurality of frequencies includes a plurality of vibrating blades of varying dimensions and resonant at different frequencies so as to produce said plurality of frequencies.

18. Means for mixing according to claim 15 wherein said excitation means includes means for applying a varying magnetic field to said chamber so as to cause it to vary its dimensions in response to the variations of the applied magnetic field.

19. Means for mixing according to claim 15 wherein said means for varying the dimensions of the variable mixing chamber includes mechanical means such as rotating cams.

20. Means for mixing substances comprising a chamber and an inlet and outlet through which said substances pass and means for exciting said substances at a plurality of frequencies as they pass through said chamber and said means for exciting includes a variable air whistle mounted in said chamber.

21. Means for mixing substances comprising a chamber and an inlet and outlet through which said substances pass and means for exciting said substances at a plurality of frequencies as they pass through said chamber and said means for exciting includes a plurality of variable air whistles mounted on said chamber.

UNITED STATES PATENT OFFICE

CERTIFICATE OF CORRECTION

Patent No. 3,614,069 Dated October 19, 1971

Inventor(s) EDWARD J. MURRY

It is certified that error appears in the above-identified patent and that said Letters Patent are hereby corrected as shown below:

Column 3, line 60, the word "high" should be --higher--.

Column 4, line 33, after the word "which" insert --is--.

Column 4, line 55, after the word "to" insert --be--.

Column 5, line 75, change the word "homogenized" to --the--.

Column 7, line 42, change the number "6,"to --all ranges--.

Column 7, line 43, change the number "6," to --richness--.

Column 7, line 74, after "75%" insert the word --even--.

Column 8, line 2, the word "A" should begin a new paragraph.

Column 8, line 22, the word "die" should be --due--.

Column 8, line 70, the word "fir" should be --for--.

Column 9, line 12, the word "collectively" should be --collectible--.

Column 9, claim 7, line 46, the word "clam" should be --claim--.

Signed and sealed this 10th day of April 1973.

(SEAL)
Attest:

EDWARD M.FLETCHER,JR.
Attesting Officer

ROBERT GOTTSCHALK
Commissioner of Patents

ORM PO-1050 (10-69)

USCOMM-DC 60376-P69
* U.S. GOVERNMENT PRINTING OFFICE