United States Patent [19]

Benton

[11] **3,795,128**

[45] **Mar. 5, 1974**

[54] **BENDING**

[76] Inventor: **Ronald Edward Benton,** 61, St. Alban's Rd., Cheam, England

[22] Filed: **Dec. 22, 1971**

[21] Appl. No.: **210,927**

[30] **Foreign Application Priority Data**

Dec. 23, 1970 Great Britain 61297/70

[52] **U.S. Cl.** **72/306,** 72/369, 72/404

[51] **Int. Cl.** **B21d 7/04**

[58] **Field of Search** 72/298, 305, 404, 217, 405, 72/306, 311, 369

[56] **References Cited**

UNITED STATES PATENTS

2,596,848	5/1952	Green	72/306
3,606,786	9/1971	Taylor	72/217
2,565,717	8/1951	Brogren	72/306
3,438,237	4/1969	Sisler	72/217
3,362,209	1/1968	Sassak	72/306
1,546,147	7/1925	Skinner	72/217
2,557,346	6/1951	Green	72/306
3,222,909	12/1965	Goettl et al.	72/306
2,724,890	11/1955	Holmboe	72/369

Primary Examiner—Charles W. Lanham
Assistant Examiner—M. J. Keenan
Attorney, Agent, or Firm—Eric H. Waters

[57] **ABSTRACT**

In bending a workpiece, the workpiece is located in a first position and bent with two inner bends by movement of respective bending members, then relative movement is effected between the workpiece and the members to a second position of the workpiece relative to the members and the workpiece is bent again with two outer bends by respective movements of the same two members.

14 Claims, 3 Drawing Figures

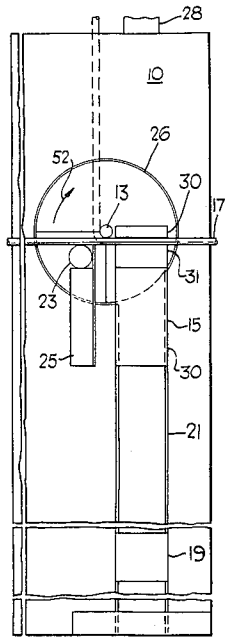

FIG.1.

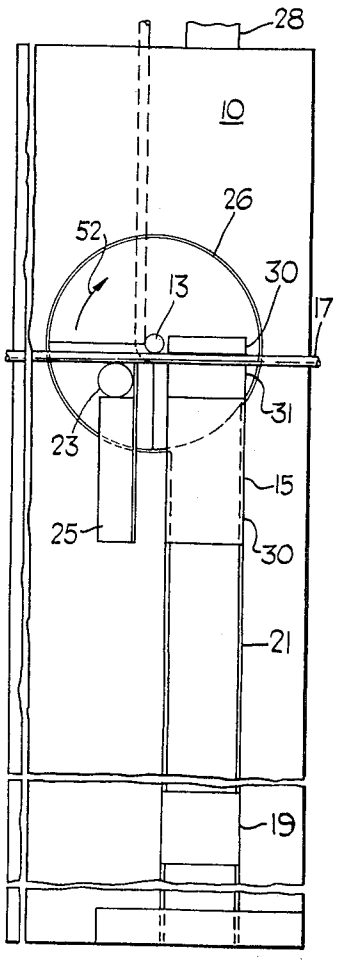

FIG.2.

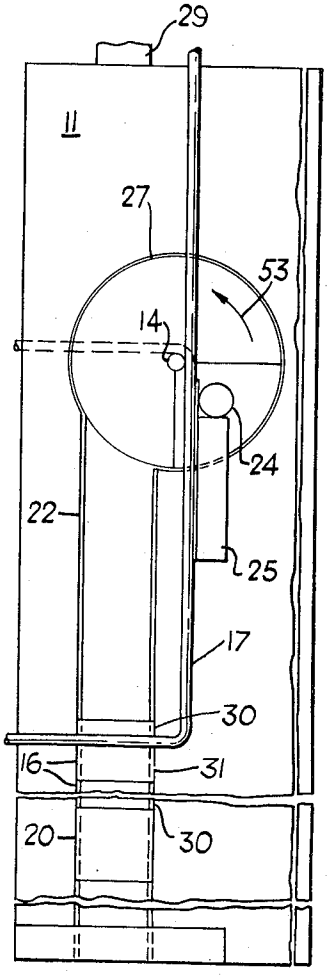

FIG.3.

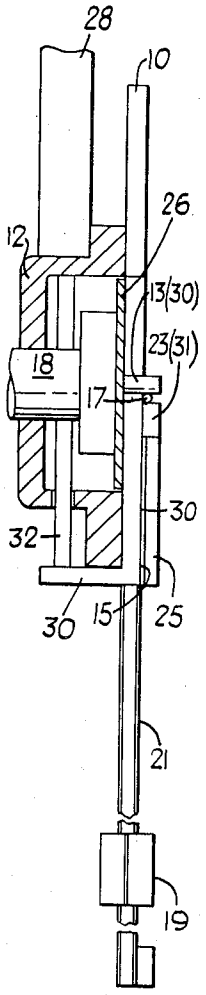

BENDING

The present invention relates to bending.

One aspect of the invention consists in bending apparatus comprising two bending members, driving means coupled to them to drive them to effect bending, and means to locate a workpiece in a first operative position for two inner bends in it to be effected by movement of the respective bending members, to effect relative movement between the bent workpiece and the respective bending members to a second operative position of the workpiece relative to the members and to locate the workpiece in the second operative position for two outer bends in it to be effected by movement of the same two members.

Another aspect of the invention consists in a process of bending using a bending arrangement having two members moved to effect bending, where the workpiece is located in a first position and bent with two inner bends by movement of the respective members, then relative movement is effected between the workpiece and the members to a second position of the workpiece relative to the members and the workpiece is bent with two outer bends by respective movements of the same two members. It will be understood that "inner" and "outer" have reference to the order in which the bends would be encountered in going along the workpiece.

The invention is particularly, but not exclusively, applicable to the manufacture of square or rectangular frames, which may be of tube or solid rod, in various metals, one example being mild steel. However, the machine will be described as though it were producing rectangular shapes in wire of between 1mm. diameter and 1cm. diameter.

In order that the invention may be more clearly understood and readily carried into effect, reference will now be made by way of example to the accompanying drawings in which:

FIG. 1 is a plan view of a left hand rotary bending head of an embodiment of the invention showing a workpiece of wire located prior to bending. Also, in this view, there is shown a chain dotted view of the wire after a first bending operation;

FIG. 2 is a plan view of a right hand rotary head (corresponding to the head of FIG. 1) of the same embodiment showing the wire in position for a second bending operation, with a chain dotted view of the wire after bending; and

FIG. 3 is a cross sectional view of the left hand bending head.

Referring to the drawings, a bending machine embodying the invention comprises a left hand bending head and a right hand bending head which is a mirror image of the left hand one. Each bending head comprises a centre shaft **18** which is rotatable in a framework cup **12** fixed in a bed **10, 11.** Mounted on and fixed to this shaft **18** there is a drive plate **26, 27.** In the centre of the drive plate **26, 27** there is a centre former **13, 14** about which a workpiece of wire **17** is bent. Also on the workpiece-supporting surface of a raised quarter of the drive plate **26, 27** there is a bending former **23, 24** so that, when the drive plate **26, 27** is rotated, it carries the bending former **23, 24** which thus bends the wire **17** about the centre former **13, 14.** These formers constitute the above-mentioned bending members. There is also a location block **15, 16** which locates the wire and is movable in a slideway **21, 22.** Location block **15, 16** comprises an S-shaped member **30** carrying an adjustable locating or clamping block **31.** There is an adjustable stop **19, 20** which limits the amount of travel of the sliding location block **15, 16.** The sliding location block **15, 16** is power operated by a piston **32** extending through cup **12** and powered by a pneumatic cylinder **28, 29.** The power might be provided by any other suitable means, e.g. hydraulic or manual. By suitable shaping (upwards extension) of block **15, 16** and members **13, 14** and **23, 24,** several wires can be accommodated for simultaneous bending.

In the bending process, one or more wires are placed in the pair of location blocks **15** and **16** adjusted to, and held or locked in, the same position in the slideways **21, 22** (the position shown in FIG. 1), to be operatively engaged simultaneously by both heads. The machine is operated and a 90° bend takes place on both the left hand and the right hand head, forming a 'U'. In this first bending operation, the wires bear against blocks **31.** Both drive plates **26, 27** return to their start position and then both sliding location blocks **15, 16** move away from the centre formers **13, 14,** along the slideways **21, 22** until they meet adjustable stops **19, 20** where they are held or locked, carrying with them the wire or wires to a second position (seen in FIG. 2). The bending heads are again actuated, thus causing the drive plates **26, 27** and bending formers **23, 24** to travel, this time through 180°, thus forming a complete rectangle. In this second bending operation, the wires bear against auxiliary members **25** mostly of L-shaped cross-section. The location blocks **15, 16** are then returned to their original position. To effect a 90° bend, the heads rotate through a little over 90°, e.g. between 92° and 100°, depending upon the nature of the workpiece. For the second bending operation, they travel through a little more than 180°.

To allow adjustment of the bending machine for rectangles of different length (the width being adjustable by means of stops **19, 20**) the bending heads are mounted on transverse rails (not shown) by means of heads **10** and **11,** one head being fixed on the rails and the other being movable to and from it along the rails, being fixed at any required position.

The seqeunce of operations can be controlled manually or by any known means. If power is provided by a pneumatic circuit, it is convenient to effect control of the sequence automatically by means of a pneumatic circuit arranged to cause each stage of operation (after the first) to be automatically initiated by limit switches indicating that the previous stage of operation is completed. Any suitable means could be provided to effect two different extents of rotation of the driving heads. Using an existing pneumatic circuit, this can be effected by arranging two separate limit switches on opposite ends of a rocking arm so that before the first bending operation one of the switches is in the path of an actuating member carried on a pneumatically power operated rack driving a pinion on shaft **18** to effect rotation of the latter, this switch effecting reversal of a pneumatic valve controlling the power operation of the rack after bending through 90° and a limit switch causing the rocking arm to rotate after the bending head has returned to its initial position after the first bending operation so as to interpose the second limit switch in the path of the actuating member, to cause reversal of the rack at the ensuing second bending

operation after bending through 180°. After completion of the second bending operation, the rocking arm could conveniently be returned to its first position after the second bending operation, when the bending head has returned to its initial position. Safety devices would ensure that the operations of both bending heads are completed at each stage before the next stage of operation is started.

In the embodiment illustrated, blocks **30** are shown moving in a guideway. In order to have dissimilar metals rubbing together, one of the metals could be phosphor bronze and the other steel. In a modification, the blocks could be mounted on linear bearings, e.g. with a ball bearing bush on a shaft. Again, there might be used a lead screw with a low pitch and high speed. Furthermore, it is possible to have a guide of any of the above kinds which is common to both heads, provided with a single block **30** co-operating with both heads or provided with a tie bar tying together respective blocks **30.**

The two heads might be operated independently but simultaneously or they might be operated from a common power circuit, or again there might be a mechanical or power medium link between them.

Where the plates **26, 27** are driven by a power medium there will be movements which do not cause bending and thus do not require drive by the power medium. For example, between the first and second bending operations, the drive plates may be returned to their initial positions and then rotated in the same direction as before through 90° before bending formers **23, 24** are brought into contact with the bent workpiece for the second bending operation. There will also be a 180° return to the initial positions after the second bending operation. One or more of these unpowered movements can be effected by linking plates **26, 27** to blocks **30,** e.g. by a rack and pinion or a ratchet or lost motion device. A ratchet device may also be used to simplify the provision of drive for the second bending operation if plates **26, 27** are not returned to their initial positions between the first and second bending operations but remain in the 90° position.

Where the two heads can be adjustably spaced apart, e.g. one or both of them being adjustably fixable on a transverse rail (not shown), any mechanical connection between blocks **30** must be adjustable also. Any problem of adjustability is simplified if there is a power medium link, by the use of flexible power medium conduits.

In order to adjust the arrangement to receive different thicknesses of workpiece it is appropriate to make bending formers **23, 24** adjustable in radial position on drive plates **26, 27.** The spacing of bending formers **23, 24** from centre formers **13, 14** must be close enough to obtain adequate sharpness of bend but not so close as would cause scoring of the workpiece.

Instead of having two different degrees of rotation in the same direction for each of the drive plates **26, 27,** it would be possible to provide a duplicate of each of formers **23, 24** which duplicates would be located 90° in advance of formers **23, 24** and would be normally retracted in plates **26, 27** and extended and used only for the second bending operation.

It would be possible to employ linear movement instead of rotary movement of formers **23, 24.** For certain shapes of workpiece, it would be appropriate to use curved guides for blocks **30.**

The upstanding part of blocks **30,** shown in FIG. **1** level with centre former **13,** could itself be used as the inner bending former, being curved for this purpose and being extended, upwards in FIG. **1,** to serve as the bending former for the second also of the bending operations. The extension might be of adjustable length. Again, the block **30** could be monolithic, adapted to locate the workpiece on two sides simultaneously and to serve for bending and transporting it. A fixed block, or an edge of slideway **21,** could be used at the right hand side of block **30** as seen in FIG. **1** to take the pressure when block **30** is used as a centre bending former.

It is conceivable that the workpiece could be held stationary and the bending heads moved past it simultaneously. It would be possible to effect the second bending to any other position. A suitable modification of the apparatus could allow this second bending operation to be outwards. The first bending operation might be carried out using complementary angles of bend, obtuse at one head and acute at the other head, so as to produce a non-rectangular parallelogram. In this case, the slide-ways could be angled, or the location blocks could be staggered with their clamping jaws aligned with one another. In any case, it might be convenient for the two bending heads to operate successively and not simultaneously.

In a process of bending as described above, setting up of the bending machine can be done quite quickly since only two settings are required, namely spacing apart of the heads for length of a rectangular frame and positioning of stops **19, 20** for the breadth of the frame. Adjustable stops could be placed to the left of the left hand head and to the right of the right hand head so that an unbent workpiece can easily be correctly located in the two heads for bending. In determining the requisite length of a workpiece, a calculation is made of the requisite length using the length and breadth of the rectangle, with or without the radius of curvature and/or the thickness of the workpiece, and a workpiece which is a predetermined length too short is bent at the appropriate settings and any necessary corrections compared with the predetermined length of gap by which the workpiece was made too short is measured, this correction being applied to obtain a correct length workpiece.

Since there are only two bending operations with a movement of the workpiece in between, the whole operation of loading, bending and unloading can be carried out very quickly, in a time of the order of one second. Thus, the apparatus is very suitable for use in an automatic system.

I claim:

1. Bending apparatus comprising two bending members, driving means coupled to the bending members to effect bending, locating means for locating a workpiece in a first operative position for two inner bends in it to be effected by movement of the respective bending members so that the workpiece then has a middle portion extending in the same direction as it did originally and two outer portions which extend in a direction which is transverse to said original direction, means to guide relative movement between the bent workpiece and the respective bending members in said transverse direction so that the parts of the workpiece previously in contact with the bending members come out of contact with them and the workpiece occupies a sec-

ond operative position relative to the members in which parts of the said outer portions which are spaced from said middle portion are in contact with the members, and means to locate the workpiece in the second operative position for two outer bends in it to be effected by movement of the same two members.

2. Apparatus as claimed in claim 1, in which the bending members are mounted for rotary movement to effect bending as aforesaid.

3. Apparatus as claimed in claim 1, in which the driving means are arranged to drive the two bending members one in one direction and the other in the opposite direction both in the first operative position and in the second operative position.

4. Apparatus as claimed in claim 1, in which each of the two bending members is coupled to be driven to perform its second bend in the same direction as its first bend and the two bending members are coupled to be driven to perform their bending movements in opposite directions so that four bends will be produced all of the same hand in going from one end of the workpiece to the other.

5. Apparatus as claimed in claim 1, in which there are means comprising the bending members and the driving means to cause all four of said bends to be 90° so as to bend the workpiece rectangularly.

6. Apparatus as claimed in claim 1, in which there are provided respective stop means for each of the members to define at least two predetermined stop positions for its movement in one direction when it is driven to effect bending.

7. Apparatus as claimed in claim 1, in which there are adjusting means for adjusting the spacing apart of the bending members.

8. Apparatus as claimed in claim 1, and further comprising means for adjustably predetermining the extent of the relative movement between the bent workpiece and said bending members in said direction.

9. Apparatus as claimed in claim 1, in which the driving means are coupled to the bending members to drive them simultaneously to effect bending as aforesaid both in the first operative position and in the second operative position.

10. Apparatus as claimed in claim 1, in which there are two bending heads, each comprising a support surface rotatable about an axis on which axis there is mounted a former, the surface carrying one of the said two bending members spaced from said axis, the driving means being coupled to the bending heads to drive the bending member in one of the heads clockwise and the other bending member in the other head anticlockwise, simultaneously, to effect the respective bends in the workpiece when the workpiece is located between each bending member and its associated former, the said locating means comprising at least one holding means to hold the workpiece at a point between the two heads and movable in a linear guideway to effect said relative movement.

11. A process of bending using a bending arrangement having two members moved to effect bending, where the workpiece is located in a first position and bent with two inner bends by movement of the respective two members so that the workpiece then has a middle portion extending in the same direction as it did originally and two outer portions which extend in a direction which is transverse to said original direction, then relative movement is effected between the workpiece and the members in said transverse direction, so that the parts of the workpiece previously in contact with the bending members come out of contact with them and the workpiece occupies a second position of the workpiece relative to the members in which parts of the said outer portions which are spaced from said middle portion are in contact with the members, and the workpiece is bent with two outer bends by respective movements of the same two members.

12. Apparatus as claimed in claim 1, including further drive means coupled to the apparatus for effecting said relative movement between the bent workpiece and the respective bending members.

13. Bending apparatus comprising two bending members each of which is for bending an elongate workpiece so that it has a portion bent transversly to its original direction, means for supporting the bending members in spaced relationship, means for adjusting the spacing apart of the bending members, driving means coupled to the bending members to effect bending, and locating means for locating a workpiece in a first operative position for two inner bends in it to be effected by movement of the respective bending members so that the workpiece then has a middle portion extending in the same direction as it did originally and two outer portions which extend in a direction which is transverse to said original direction, means to guide relative movement between the bent workpiece and the respective bending members in said transverse direction, so that the parts of the workpiece previously in contact with the bending members come out of contact with them and the workpiece occupies a second operative position relative to the members which is selectable and in which parts of the said outer portions which are spaced from said middle portion are in contact with the members, and means to locate the workpiece in the second operative position for two outer bends in it to be effected by movement of the same two members.

14. A machine for forming two inner bends and two outer bends in an elongate workpiece of selectable cross-sectional dimension so as to form the workpiece into a closed figure of selectable size, said machine comprising two similar support beds mounted in adjustable spaced relationship, each support bed having a linear slideway formed therein; two workpiece support members mounted in respective ones of said linear slideways and slidable therein, each support member comprising an adjustable portion which bounds a workpiece receiving space of adjustable size in which said workpiece is located and held; two stop members fixable at selectable positions for defining one limit of movement of said support members in the slideways; two bending heads each comprising a plate mounted for rotation in a respective one of said beds near one end of a respective one of said two slideways and each comprising a pair of bending members one of which projects from said plate at the axis of rotation thereof and the other of which projects from said plate at a position in adjustable spaced relation to said axis, each pair of bending members being positioned at that side of the associated support member which is remote from the other support member, whereby said workpiece can be located and held in both said workpiece receiving spaces with two portions of the workpiece at which said two inner bends are to be made in contact with the bending members of respective pairs thereof; first driving means coupled to said plates for rotating them in

opposite directions to cause the bending members to effect said two inner bends, whereby the workpiece is bent so that it then has a middle portion extending between said workpiece receiving spaces in the same direction as it did originally and two outer portions which extend in a direction transverse to said original direction; second drive means coupled to said workpiece support members for moving them in the same direction in said slideways to positions defined by said stop members so as to effect relative movement between the bent workpiece and said bending heads so that the said portions of the workpiece previously in contact with the bending members come out of contact with them and the workpiece becomes located in a second operative position relative to the bending members, in which position parts of the said outer portions which are spaced from said middle portion are in contact with the bending members, whereby said first driving means can actuate the same two bending heads to form said two outer bends in said workpiece.

* * * * *