March 17, 1931. A. AHLBERG 1,796,354

OPTICAL APPARATUS

Original Filed Sept. 20, 1927

Fig. 1.

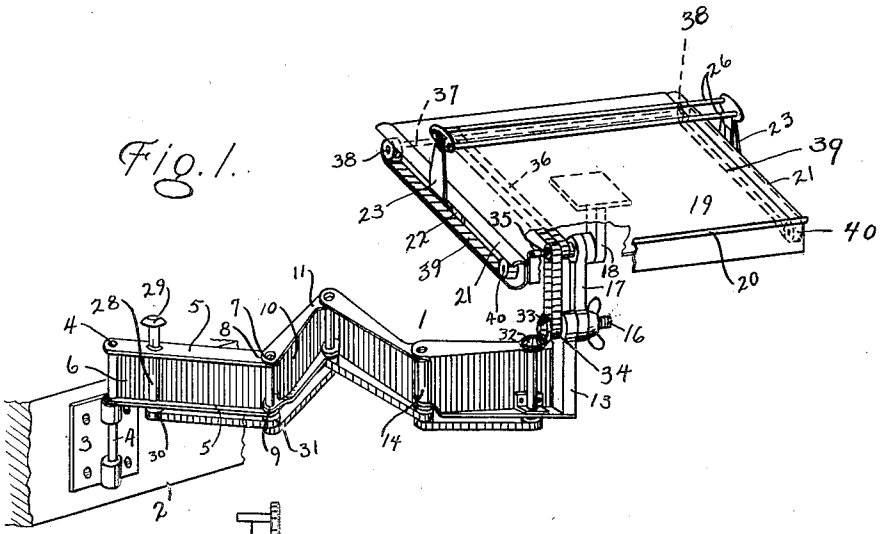

Fig. 2.

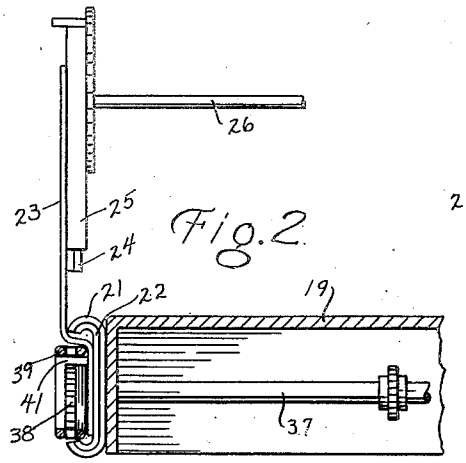

Fig. 3.

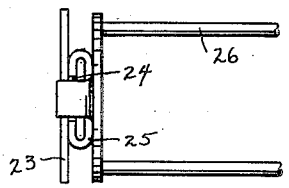

Inventor.
Alfred Ahlberg.
By Minturn & Minturn
Attorneys.

Patented Mar. 17, 1931

1,796,354

UNITED STATES PATENT OFFICE

ALFRED AHLBERG, OF INDIANAPOLIS, INDIANA

OPTICAL APPARATUS

Original application filed September 20, 1927, Serial No. 220,688. Divided and this application filed September 18, 1929. Serial No. 393,386.

This invention relates to a support for books and papers, which, in turn, is supported by a jointed and adjustable arm, from a table, chair, or other support, and is a division out of my application for patent filed September 20, 1927, Serial No. 220,688 which has resulted in Patent No. 1,733,107, issued Oct. 29, 1929.

The object of this invention is to provide a travelling carrier for a magnifying glass, adjustable in height above the printed page on said support, to focus the lines of the book or paper, and which is also movable up and down the printed page, to follow the lines in reading, by means manipulated close to the reader and relatively remote from the printed page as by an invalid in bed or in a chair, who is unequal physically to the exertion of reaching to the support for the printed page to practically manipulate the carrier.

I accomplish the foregoing objects by the mechanism illustrated in the accompanying drawing, in which like characters of reference indicate like parts in the several views, comprising,—

Fig. 1, a perspective view of my complete assembly;

Fig. 2, a fragment in vertical section of the table for supporting a book or paper and showing in particular the construction of the magnifying glass support; and

Fig. 3, a detail in plan view of the glass support shown in Fig. 2.

The table supporting arm 1, is formed out of a plurality of sections or members which are hinged together to form an adjustably jointed structure which is connected by a hinge joint to a support 2, which may be a table, chair, bed, wall or anything suitable. A plate 3 has knuckles which receive a pin 4 which also passes through flanges 5 of the first arm member 6. This member 6 rests on and swings horizontally above the top knuckle. Ears 8 and 9, on a second member 10, receive a hinge-pin 7 which hinges the arm members 6 and 10 together, and in like manner the remaining sections of the arms are hinged together. The last section has a fixed vertical post 13, to which an arm 17 is pivotally attached by a bolt 16.

The arm 17 is hinged by a pin to an arm 18, which is rigidly attached to the bottom of a table 19. By adjusting the angle of the arm 17, the table may be raised and lowered within the range of the arm. A flange 20 at the bottom of the table holds a book or paper from sliding off when the table is tilted.

Fastened to each of the two side edges of the table are metal channels 21, each comprising a strap with edges bent out and then down, and inserted from their ends are plates 22, with correspondingly turned edges which fit slidingly in the channels 21. Riveted to plates 22, are standards 23, that extend a suitable distance above the table. The standards on their inner sides each has a vertical channeled rib 24, embraced by a correspondingly shaped standard extension 25, having lateral ears in which the ends of a pair of parallel rods 26 are seated. The rods are the supports for a magnifying glass of any suitable form (not shown). By adjusting the standard-extension 25 on the standards by the means shown, the glass supported by the rods may be raised or lowered to enable the reader to get the desired focus on the reading matter on the table below.

The movement of the magnifying glass up and down the page, of a book or paper on the table, is accomplished by sliding the two standards 23, 23, one on each side of the table, in their channels 21. To this end I mount a vertical shaft 28 in the flanges of member 6, and on its upper end provide a hand knob 29, and on its lower end a sprocket-wheel 30. The latter is connected by a link-belt with a sprocket-wheel 31 on the next joint-pin 7.

Fixed to wheel 31 is a second sprocket wheel which is connected by a link belt with a sprocket wheel on the pin at the next joint pin further out, and so on to the end of the last arm member where the last link belt drives a sprocket wheel on the lower end of a vertical shaft on the upper end of which a bevel gear wheel 32 is mounted. The bevel 32 meshes with a bevel gear wheel 33, on the

shaft 16, which is the hinge-pin at the joint connecting post 13 with the arm 17. A sprocket wheel 34 on the shaft 16 is belted with a like wheel 35 on the joint-pin connecting the arms 17 and 18. A second sprocket wheel on the last joint-pin is connected by belt 36 with a wheel on a shaft 37, extending across the upper end of the table and journaled in the side flanges of the table. On each end of shaft 37, outside of the table, is a sprocket wheel 38, which drives a belt 39, one at each end of the table, passing around respective wheels 40. The two belts 39 are fastened at 41, (see Fig. 2), to their respective standards 23.

From the foregoing—by reference to the drawing—it will be seen that when the knob 29 is turned by hand the standards 23, and therefore the magnifying glass, may be appropriately moved as the person uses it desires, regardless of the angle of the table and positions of the members of its supporting arm.

While I have shown and described my invention with more or less minuteness as regards details of construction and arrangement and as being embodied in certain precise forms, I do not desire to be limited to the arrangement and form here shown, unduly, or any more than is pointed out in the claims. On the contrary, I contemplate all proper changes in form and arrangement, the omission of immaterial elements and the substitution of equivalents, as circumstances may suggest or as necessity may render expedient. It is also obvious that the arm support can be used as a support for a telephone, an electric light, or other lamps and for various devices, which I desire to include in the use to which my invention is applied.

I claim:

1. In an optical device, a table, a pair of channel-bars secured one on each side edge of the table, a plate slidingly mounted in each channel-bar, a standard fixed to each plate, lens supporting means secured to the standards and manually operated means for sliding the plates simultaneously in the channel-bars.

2. In an optical device, a table, a jointed bracket for adjustably supporting the table, a pair of channel-bars secured one on each side of the table, a plate slidingly mounted in each channel-bar, a standard fixed to each plate, lens supporting bars secured to the standards, a manuallly operated shaft in the bracket member most remote from the table, and means operated by the rotation of the shaft for sliding the plates simultaneously in the channel-bars.

3. In an optical device, a table, a bracket in a plurality of jointed sections for adjustably supporting the table, a pair of channels one on each side of the table, a plate slidingly mounted in each channel, a standard fixed to each plate having channeled ribs, lens supporting bars, standard extensions sliding on the ribs for supporting the bars with a vertical adjustment by the standards, a manually operated shaft mounted on the bracket section most remote from the table and belt means connecting the shaft with the standards to slide the plates simultaneously in the channels.

4. In an optical device, a table, a bracket in a plurality of jointed sections adjustably supporting the table, a pair of channels one on each side of the table, a plate slidingly mounted in each channel, a standard fixed to each plate, lens supporting bars, means for supporting the bars with a vertical adjustment by the standards, a manually operated shaft on the bracket section most remote from the table, a shaft on the nearest section, a belt drive between the two shafts, a counter shaft driven from the second shaft, and means connecting the counter shaft with the standards to slide the plates simultaneously in the channels.

In testimony whereof I affix my signature.

ALFRED AHLBERG.