US 20060013703A1

(19) United States

(12) Patent Application Publication (10) Pub. No.: US 2006/0013703 A1

Yokozawa et al. (43) Pub. Date: Jan. 19, 2006

(54) MULTI-CHANNEL PUMP AND ITS CONTROL METHOD

(76) Inventors: **Mitsuo Yokozawa**, Nagano (JP); **Kenji Muramatsu**, Nagano (JP)

Correspondence Address:
CANTOR COLBURN, LLP
55 GRIFFIN ROAD SOUTH
BLOOMFIELD, CT 06002

(21) Appl. No.: **11/176,504**

(22) Filed: **Jul. 7, 2005**

(30) **Foreign Application Priority Data**

Jul. 15, 2004 (JP) 2004-208551

Publication Classification

(51) **Int. Cl.**
F04B 41/00 (2006.01)
F04B 49/00 (2006.01)

(52) **U.S. Cl.** **417/274**; 417/502

(57) **ABSTRACT**

A multi-channel pump includes a pump chamber, an inflow passage connected to the pump chamber, two or more outflow passages connected to the pump chamber, outflow side active valves provided so as to correspond to the outflow passages, and a movable body reciprocated to change a volumetric capacity of the pump chamber. The movable body may be a piston reciprocated within a cylinder that is connected to the pump chamber. A control method for a multi-channel pump includes an initial discharge step between a suction step and a discharge step.

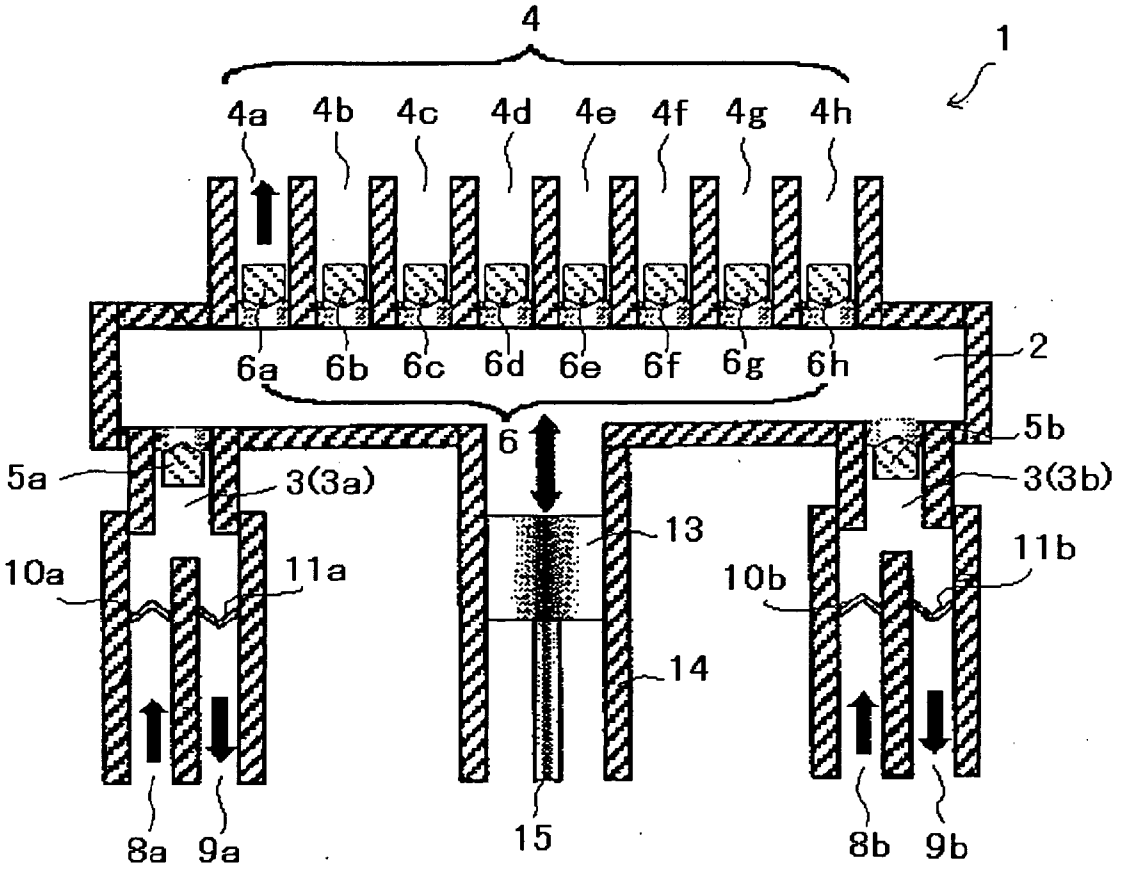

Fig.1

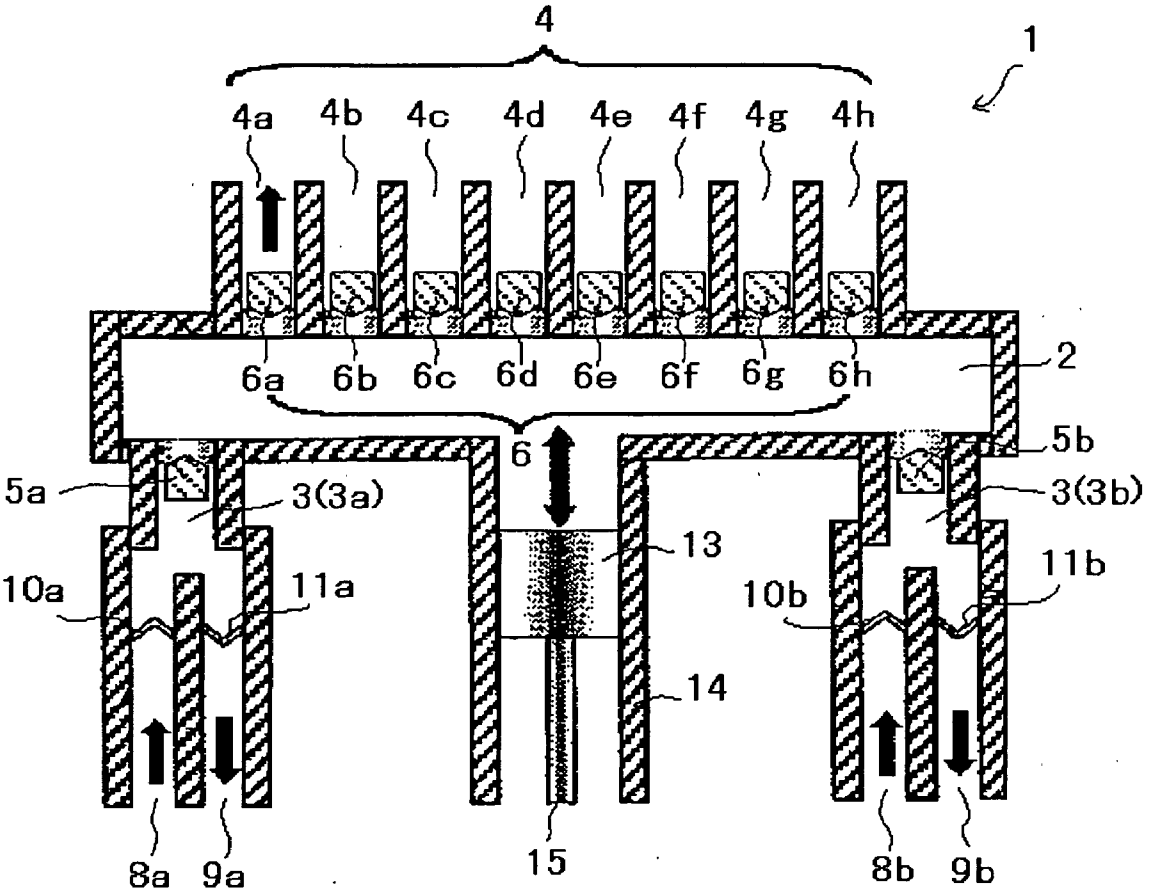
4
1
4a
4b
4c
4d
4e
4f
4g
4h
6a
6b
6c
6d
6e
6f
6g
6h
2
6
5b
5a
3(3a)
3(3b)
13
11b
10a
11a
10b
14
8a
9a
15
8b
9b

Fig.2

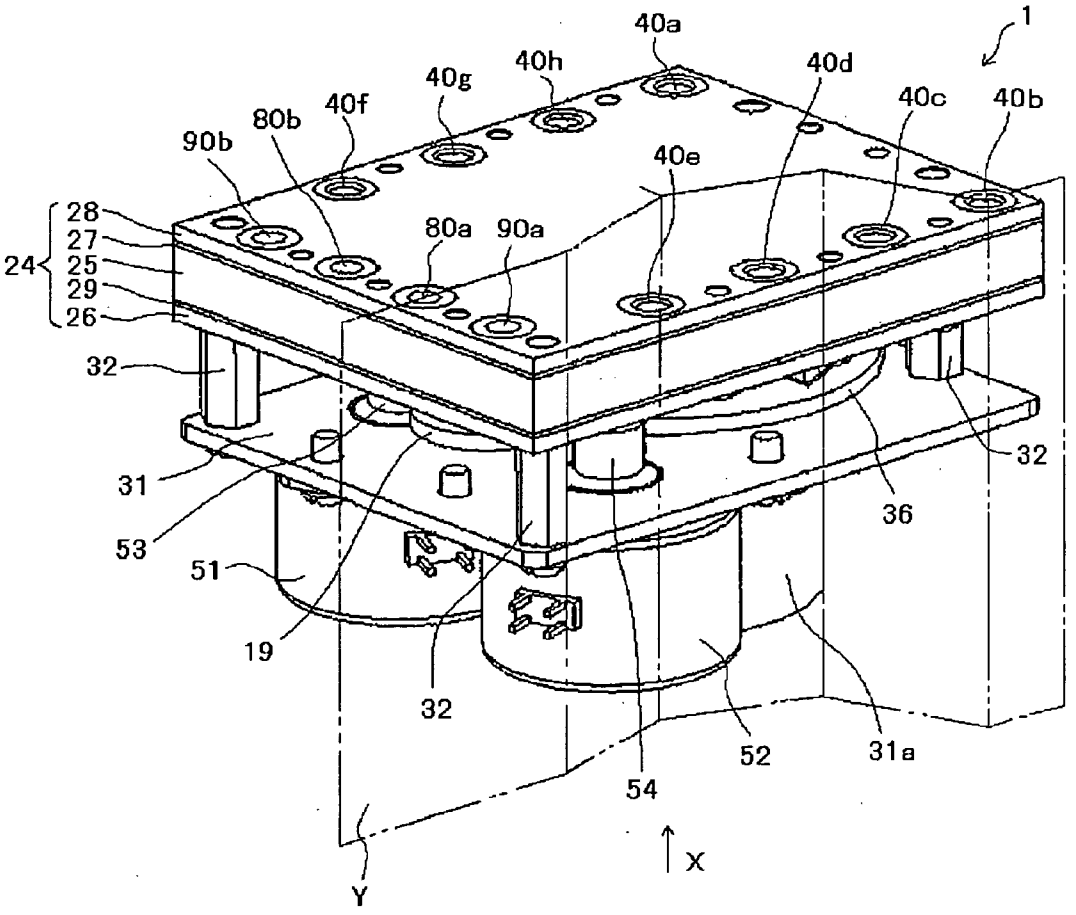
1
40a
40h
40d
40g
40f
80b
90b
40c
40b
40e
28
27
24
25
29
26
80a
90a
32
31
53
51
19
32
36
32
52
31a
54
X
Y

Fig.3

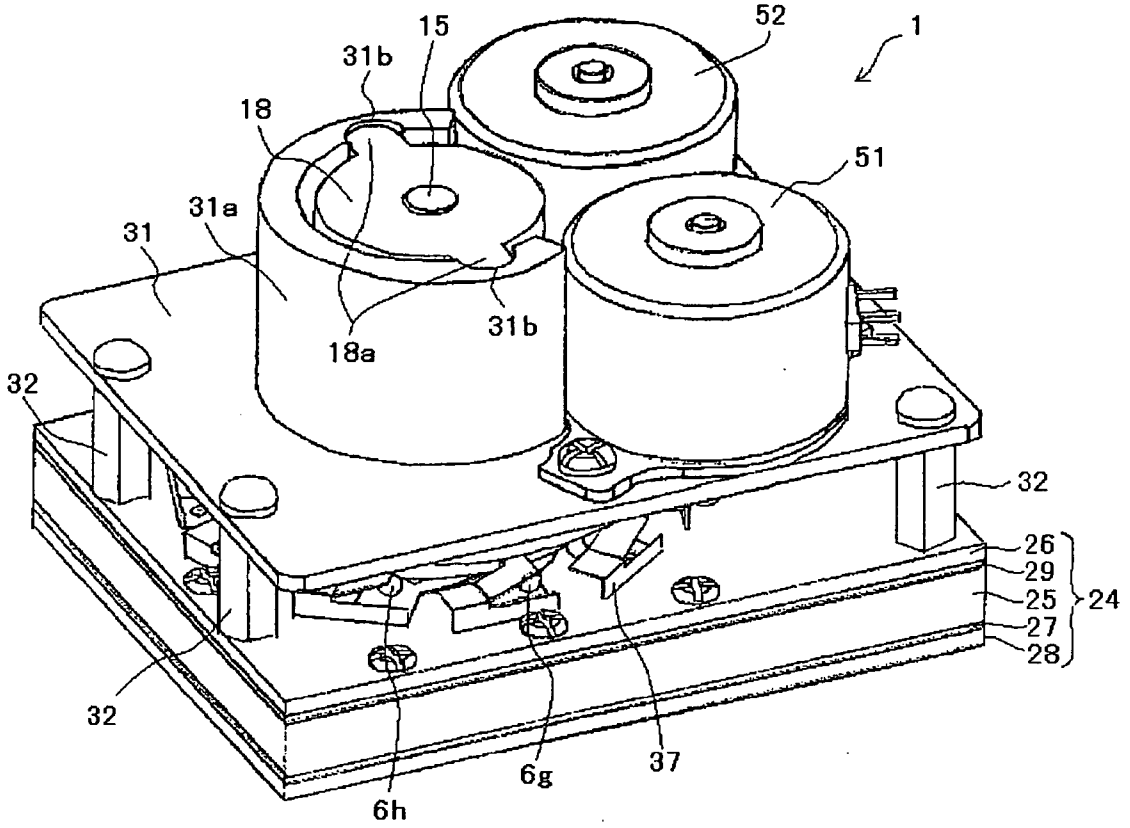

Fig.4

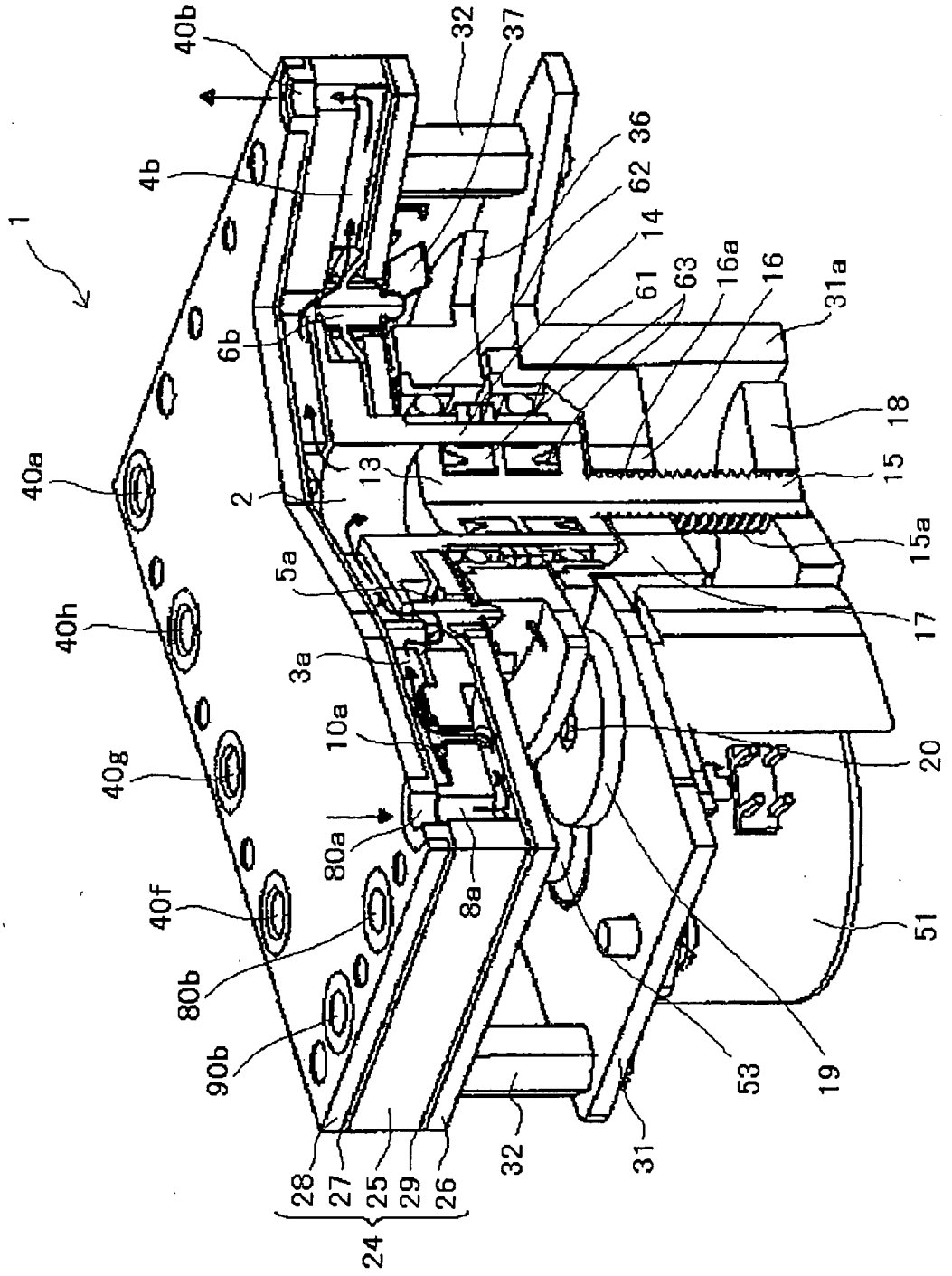
1
2
3a
4b
5a
6b
8a
10a
13
14
15
15a
16
16a
17
18
19
20
24
25
26
27
28
29
31
31a
32
32
36
37
40a
40b
40f
40g
40h
51
53
61
62
63
80a
80b
90b

Fig.5

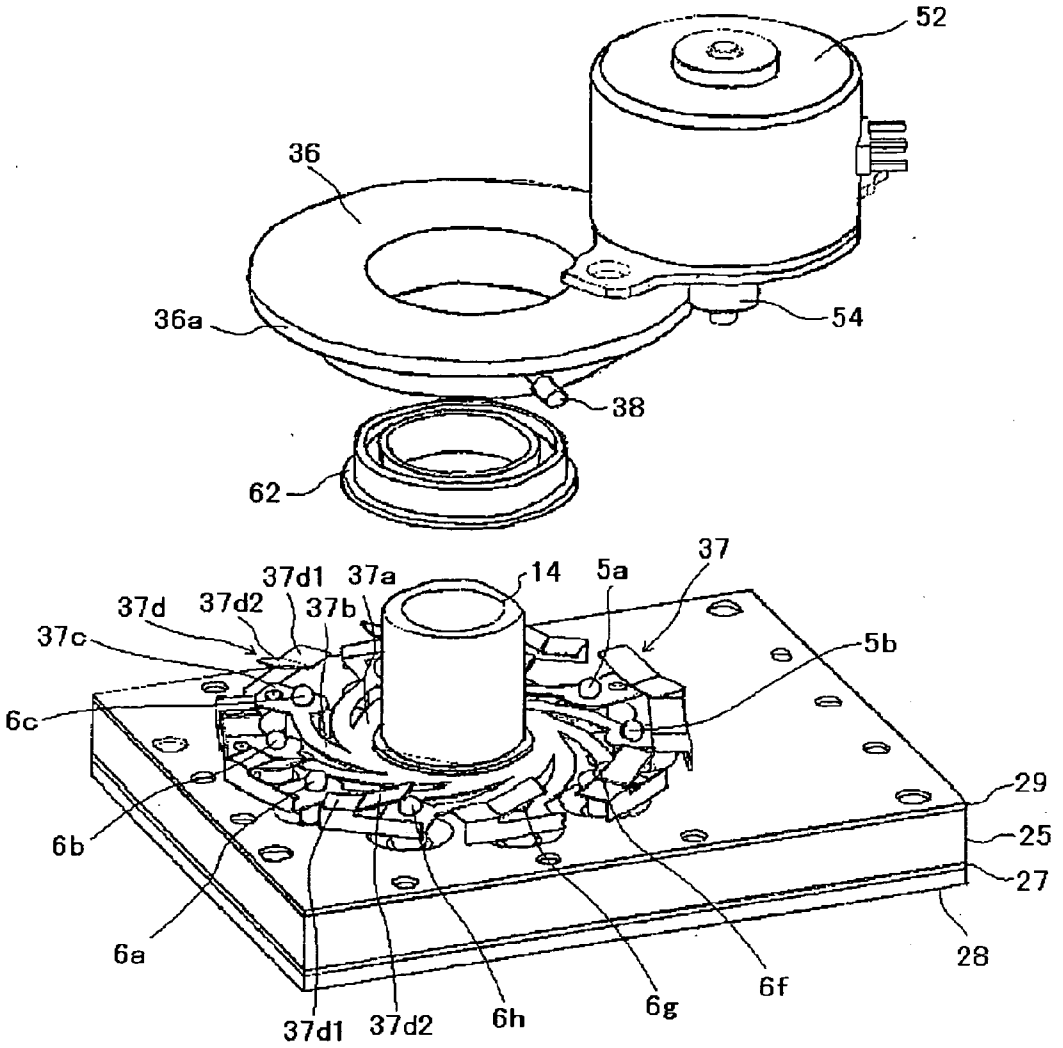
52
36
36a
54
38
62
37
37d1
37a
14
5a
37d
37d2
37b
37c
5b
6c
29
25
6b
27
6a
28
6f
6g
6h
37d1
37d2

Fig.6

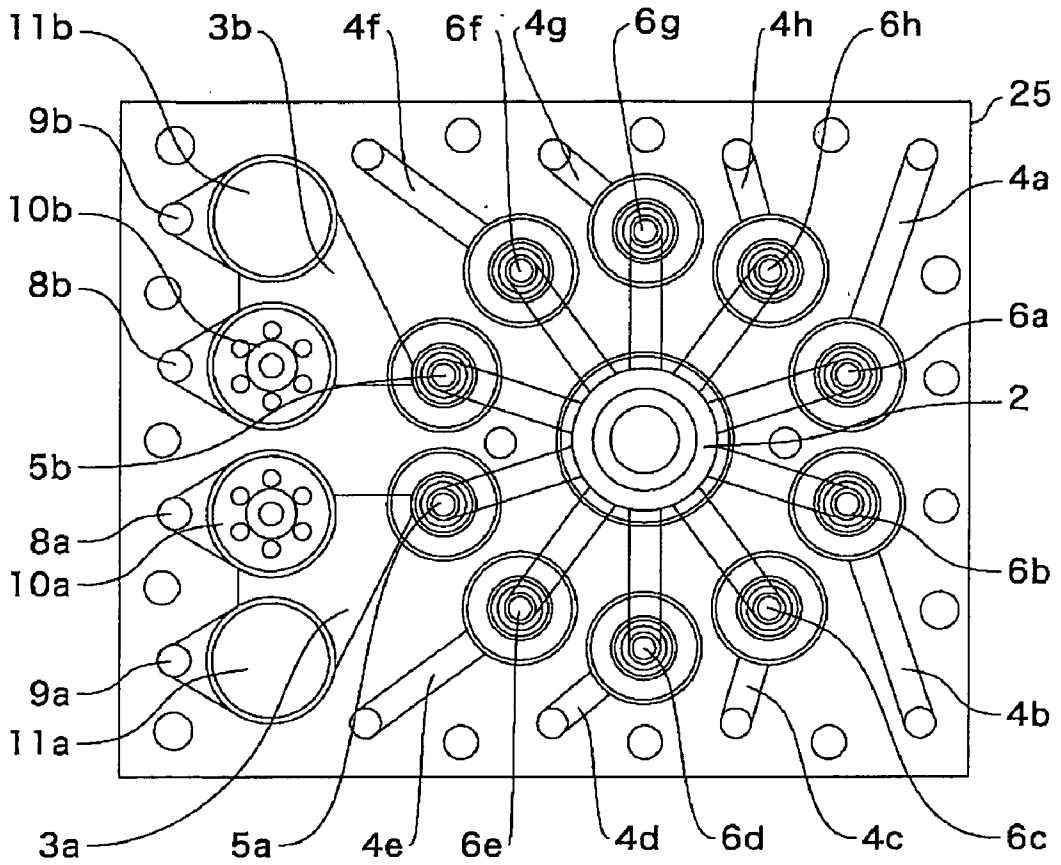
11b
3b
4f
6f
4g
6g
4h
6h
25
9b
4a
10b
8b
6a
2
5b
8a
10a
6b
9a
4b
11a
3a
5a
4e
6e
4d
6d
4c
6c

Fig. 7

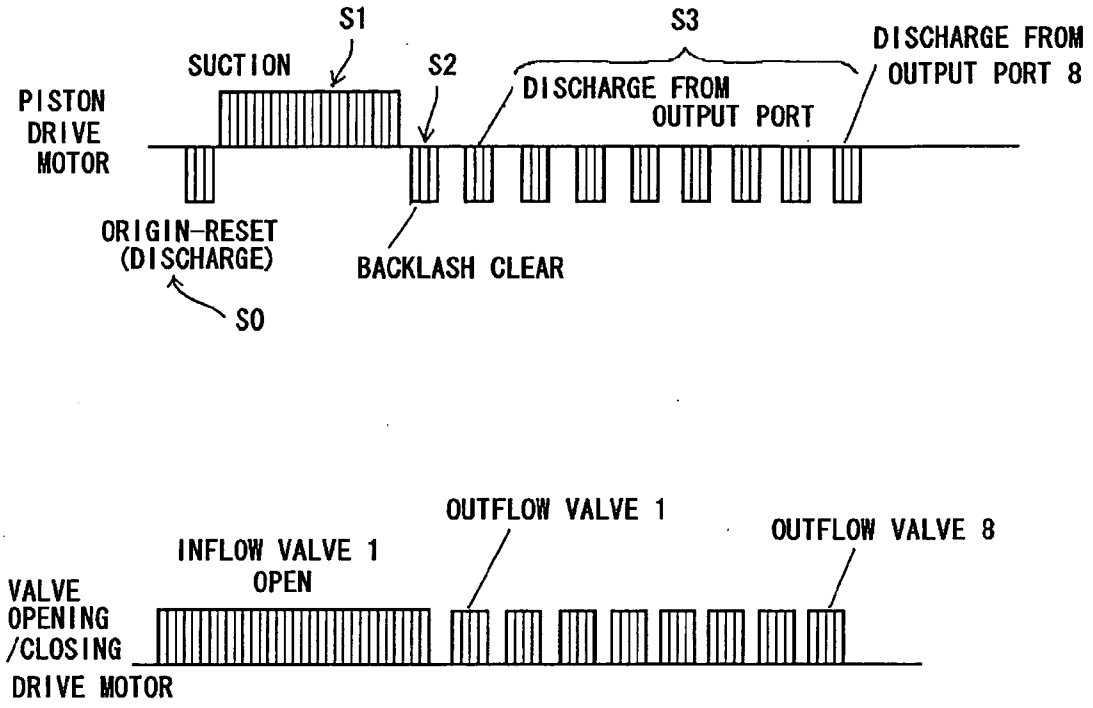
S1
S3
SUCTION
S2
DISCHARGE FROM
OUTPUT PORT 8
PISTON
DRIVE
MOTOR
DISCHARGE FROM
OUTPUT PORT
ORIGIN-RESET
(DISCHARGE)
BACKLASH CLEAR
S0
OUTFLOW VALVE 1
OUTFLOW VALVE 8
INFLOW VALVE 1
OPEN
VALVE
OPENING
/CLOSING
DRIVE MOTOR

MULTI-CHANNEL PUMP AND ITS CONTROL METHOD

CROSS REFERENCE TO RELATED APPLICATION

[0001] The present invention claims priority under 35 U.S.C. §119 to Japanese Application No. 2004-208551 filed Jul. 15, 2004, which is incorporated herein by reference.

FIELD OF THE INVENTION

[0002] The present invention relates to a multi-channel pump which is used in a direct methanol type fuel cell or the like and a control method for the multi-channel pump.

[0003] In the present specification, the "multi-channel pump" means a pump which is provided with a plurality of outflow passages for discharging fluid.

BACKGROUND OF THE INVENTION

[0004] Expectation for a fuel cell has been elevated as a power supply for a portable electronic device used in information society in recent years or as a power supply for coping with air pollution or global warning. Among the fuel cells, a direct methanol type fuel cell hereinafter, referred to as DMFC: Direct Methanol Fuel Cell) in which power generation is performed by directly taking out protons from methanol provides characteristics that a reformer is not required and the volume energy density is high, and thus application to a portable electronic device has been increasingly expected

[0005] Various DMFC's have been proposed which are provided with a power generating device having a power generating part (cell), an accommodating vessel for accommodating methanol or methanol aqueous solution (hereinafter, referred to as methanol), and a liquid feed pump for feeding methanol forcibly from the accommodating vessel (see, for example, Japanese Patent Laid-Open No. 2004-71262, Japanese Patent Laid-Open No. 2004-127618, and Japanese Patent Laid-Open No. 2004-152741).

[0006] The cell includes an anode electrode (fuel electrode) having an anode collector and an anode catalyst layer, a cathode electrode (air electrode) having a cathode collector and a cathode catalyst layer, and an electrolyte membrane disposed between the anode electrode and the cathode electrode. Methanol is supplied to the anode electrode by a liquid feed pump and air is supplied to the cathode electrode by an air supply pump.

[0007] The activity of methanol oxidation is low in the anode electrode of the cell which is the power generating part of an above-mentioned DMFC and thus a voltage loss occurs. Further, a voltage loss occurs in the cathode electrode. Therefore, an output capable of being obtained from one cell becomes extremely low. Accordingly, a plurality of cells is used in the DMFC to obtain a prescribed output

[0008] When methanol is excessively supplied to the anode electrode, a so-called crossover occurs which means that a part of the methanol transmits through the electrolyte membrane in an unreacted state and leaks to the cathode electrode. Since the crossover causes the electric potential of the cathode electrode to decrease, the voltage loss occurs in the cathode electrode. Further, unreacted methanol that is reaches the cathode electrode is not related to power generation but reacts with oxygen to generate heat, and thus the power-generating efficiency in the cell is significantly reduced by the crossover. Accordingly, it is preferable not to supply excessive methanol to the anode electrode.

[0009] As described above, as a liquid feed pump for supplying methanol to the anode electrode of a cell, it has been desired which is provided with characteristics that discharge to a plurality of cells is possible and an appropriate amount of methanol can be accurately discharged. However, the liquid feed pump having such characteristics has not been proposed.

SUMMARY OF INVENTION

[0010] In view of the problems descried above, the present invention may advantageously provide a multi-channel pump which is provided with a plurality of outflow passages for discharging fluid and capable of accurately discharging an appropriate amount of fluid and provide a control method for the multi-channel pump.

[0011] Further, the present invention may advantageously provide a multi-channel pump which is capable of being mounted in a small-sized DMFC or the like that is used in a portable electronic device or the like.

[0012] Thus, according to the present invention, there may be provided a multi-channel pump including a pump chamber, an inflow passage for fluid which is connected to the pump chamber, two or more outflow passages which are connected to the pump chamber, outflow side active valves which are provided in the outflow passages so as to correspond to the outflow passages, and a movable body which is reciprocated to change the volumetric capacity of the pump chamber.

[0013] In accordance with an embodiment of the present invention, the multi-channel pump is provided with two or more outflow passages which are connected to a pump chamber through outflow side active valves. Accordingly, the reverse flow of the fluid can be surely prevented when the outflow side active valve is closed. Further, the discharge destination of the fluid discharged from the outflow passage can be controlled by the outflow side active valve. In addition, the multi-channel pump is provided with one movable body which is reciprocated to change the volume of the pump chamber. Therefore, since the fluid is discharged from the respective outflow passages by using one movable body, the discharging performance becomes uniform and thus the variation of the discharge amount from the respective outflow passages is restrained and an appropriate amount of fluid can be accurately discharged.

[0014] Further, in accordance with an embodiment of the present invention, an inflow passage is connected to the pump chamber to which a plurality of outflow passages are connected. Therefore, the inflow passage can be provided in common for the plurality of outflow passages and thus the structure of the pump can be simplified. In addition, since only one movable body is provided, the structure of the pump is also simplified. Accordingly, the downsizing of the pump can be attained and the pump can be mounted in a small-sized device such as a DMFC that is used in a portable electronic device.

[0015] In accordance with an embodiment of the present invention, the movable body is preferably a piston which is reciprocated within a cylinder that is connected to the pump chamber. When the movable body is a piston, the moving quantity of the piston is relatively easy to control and thus a minute flow rate can be accurately discharged.

[0016] In accordance with an embodiment of the present invention, the multi-channel pump preferably includes a piston rod to which the piston is fixed, a male screw formed on the outer peripheral part of the piston rod, a rotation body which is formed with a female screw threadedly engaging with the male screw to make the piston reciprocate, and a piston drive motor which drives the rotation body to rotate. In this case, the moving quantity of the piston can be controlled by the pitch of the screw and the rotation quantity of the piston drive motor and thus a minute flow rate can be accurately discharged with a simple structure.

[0017] In accordance with an embodiment of the present invention, the piston drive motor is preferably a stepping motor. In this case, the moving quantity of the piston can be further accurately controlled.

[0018] In accordance with an embodiment of the present invention, the multi-channel pump is preferably provided with two or more inflow passages. According to the construction described above, for example, when fluid accommodating vessels are respectively connected to the respective inflow passages, the fluid accommodating vessel can be easily replaced.

[0019] In accordance with an embodiment of the present invention, the inflow passage is preferably connected to the pump chamber through an inflow side active valve. In this case, the reverse flow from the pump chamber to the inflow passage can be surely prevented in comparison with the case where the inflow passage is connected to the pump chamber through a passive valve.

[0020] In accordance with an embodiment of the present invention, the multi-channel pump may include a first flow passage provided in the inflow passage and having a passive valve which is capable of opening in an inflow direction to the pump chamber, and a second flow passage provided in the inflow passage and having a passive valve which is capable of opening in an outflow direction from the pump chamber. In this case, the inflow side active valve is preferably provided between the first flow passage, the second flow passage and the pump chamber.

[0021] In accordance with an embodiment of the present invention, the fluid is liquid and a detector for detecting presence of bubbles may be provided in the pump chamber.

[0022] In accordance with an embodiment of the present invention, the inflow passage is connected to the pump chamber through an inflow side active valve which is opened and closed by a drive actuator for inflow side active valve, the outflow side active valves which are provided so as to correspond to the two or more outflow passages are individually opened and closed by a drive actuator for outflow side active valve, and the movable body is a piston which is reciprocated within a cylinder that is connected to the pump chamber.

[0023] In accordance with an embodiment of the present invention, the drive actuator for outflow side active valve is a valve opening/closing drive motor, a cam is provided which is moved by the valve opening/closing drive motor, and the outflow side active valves provided so as to correspond to the outflow passages are individually opened and closed by the cam. Therefore, a plurality of outflow side active valves are successively opened and closed by the cam which is moved by the valve opening/closing drive motor.

[0024] Further, according to the present invention, there may be provided a control method for a multi-channel pump including a suction step in which the inflow side active valve is opened and the fluid is sucked into the pump chamber by a suction operation of the movable body and then the inflow side active valve is closed, an initial discharge step after the suction step in which one of the outflow side active valves is opened and the fluid is discharged from the pump chamber by the discharge operation of the movable body to eliminate backlash of the pump, and a discharge step after the initial discharge step in which an outflow side active valve is successively opened and a prescribed amount of the fluid is discharged by the discharge operation of the movable body.

[0025] Alternatively, according to the present invention, there may be provided a control method for a multi-channel pump including a suction step in which the inflow side active valve is opened and the fluid is sucked into the pump chamber from a first flow passage by a suction operation of the movable body, an initial discharge step after the suction step in which the backlash of the pump is eliminated by means of that the fluid is discharged from the pump chamber to a second flow passage by the discharge operation of the movable body and then the inflow side active valve is closed, and a discharge step after the initial discharge step in which an outflow side active valve is successively opened and a prescribed amount of the fluid is discharged by the discharge operation of the movable body.

[0026] According to the control method of the present invention, the initial discharge step for eliminating the backlash of the pump is provided between the suction step and the discharge step. Therefore, the relationship between the moving quantity of the movable body and the discharge amount from the outflow passage can be maintained in a linear manner from the beginning of the discharge step. Accordingly, when the moving quantity of the movable body is appropriately controlled, the discharge amount from the outflow passage where the fluid is firstly discharged in the discharge step can be accurately controlled and thus the variation of the discharge amounts from the respective outflow passages can be reduced.

[0027] Further, in the control method for the multi-channel pump in accordance with an embodiment of the present invention, fluid is collectively sucked in the suction step which is required to discharge from the outflow passages by a plurality of times in the discharge step. Therefore, even when the discharge amount of the fluid which is discharged from the respective outflow passages is a significantly small amount, the suction amount can be ensured to some extent Accordingly, the capacity of the multi-channel pump can be increased and the self-feeding performance can be easily attained.

[0028] In the present specification, "backlash of a pump" means a phenomenon that, when the operation of the movable body is changed from suction to discharge, a linear relationship is not obtained between the moving quantity of the movable body and the discharge amount from the outflow passage. This is a phenomenon occurred by the backlash of a mechanism for driving the movable body.

[0029] As described above, in the multi-channel pump in accordance with the present invention, since two or more outflow passages are connected to the pump chamber through the outflow side active valves, the reverse flow of fluid can be surely prevented when the outflow side active valves are closed and the discharge destination of the fluid discharged from the outflow passage can be controlled by using the outflow side active valve. In addition, the multi-channel pump is provided with one movable body that is reciprocated to change the volume of the pump chamber. Therefore, the discharging performance becomes uniform and thus the variation of discharge amount from the respective outflow passages can be restrained and an appropriate amount of fluid can be accurately discharged.

[0030] Further, in the multi-channel pump in accordance with the present invention, an inflow passage is connected to the pump chamber to which a plurality of outflow passages are connected Therefore, the inflow passage can be provided in common for the plurality of outflow passages and thus the structure of the pump can be simplified. In addition, since only one movable body is provided, the structure of the pump is also simplified. As a result, the downsizing of the pump can be attained.

[0031] Further, in the control method for the multi-channel pump of the present invention, the initial discharge step for eliminating the backlash of the pump is provided between the suction step and the discharge step. Therefore, the relationship between the moving quantity of the movable body and the discharge amounts from the outflow passages can be maintained in a linear manner from the beginning of the discharge step. Accordingly, the discharge amount from the outflow passage where the fluid is firstly discharged in the discharge step can be also accurately controlled and thus the variation of the discharge amounts from the respective outflow passages can be reduced. As a result, an appropriate amount of fluid can be accurately discharged from the respective outflow passages.

[0032] Other features and advantages of the invention will be apparent from the following detailed description, taken in conjunction with the accompanying drawings that illustrate, by way of example, various features of embodiments of the invention.

BRIEF DESCRIPTION OF THE DRAWINGS

[0033] Embodiments will now be described, by way of example only, with reference to the accompanying drawings which are meant to be exemplary, not limiting, and wherein like elements are numbered alike in several Figures, in which:

[0034] **FIG. 1** is a schematic view showing a basic structure of a multi-channel pump in accordance with an embodiment of the present invention

[0035] **FIG. 2** is a perspective view showing a concrete structure of the multi-channel pump shown in **FIG. 1** which is viewed from the discharge side of methanol.

[0036] **FIG. 3** is a perspective view showing the multi-channel pump shown in **FIG. 2** which is viewed from the "X" direction.

[0037] **FIG. 4** is a perspective view showing the multi-channel pump shown in **FIG. 2** which is cut in the "Y" cross section.

[0038] **FIG. 5** is an exploded perspective view showing an opening/closing mechanism of active valves of the multi-channel pump shown in **FIG. 2**.

[0039] **FIG. 6** is a plan view showing a structure of inflow passages and outflow passages of the multi-channel pump shown in **FIG. 2**.

[0040] **FIG. 7** is a timing chart showing a control method of the multi-channel pump shown in **FIG. 2**.

DETAILED DESCRIPTION OF THE PREFERRED EMBODIMENTS

[0041] An embodiment of the present invention will be described below with reference to the accompanying drawings.

[0042] **FIG. 1** is a schematic view showing a basic structure of a multi-channel pump in accordance with an embodiment of the present invention.

[0043] A multi-channel pump **1** (pump **1**) in accordance with an embodiment of the present invention is used as a liquid feed pump for feeding methanol forcibly in a DMFC used, for example, in a portable electronic device. The multi-channel pump **1** includes a pump chamber **2**, inflow passages **3** connected to the pump chamber **2**, two or more outflow passages **4** connected to the pump chamber **2** through outflow side active valves **6**, and a movable body **13** which is reciprocated to change the volumetric capacity of the pump chamber **2**. More concretely, two inflow passages **3***a*, **3***b* are connected to a pump chamber **2** and eight outflow passages **4***a* through **4***h* are connected to the pump chamber **2** through eight outflow side active valves **6***a* through **6***h*.

[0044] One end sides of the inflow passages **3***a*, **3***b* (upper end side in the drawing) are connected to the pump chamber **2** through inflow side active valves **5***a*, **5***b*. The other end sides of the inflow passages **3***a*, **3***b* are connected to first flow passages **8***a*, **8***b* (first flow passage **8**) provided with passive valves **10***a*, **10***b* (passive valve **10**) which respectively open in an inflow direction to the pump chamber and connected to second flow passages **9***a*, **9***b* (second flow passage **9**) provided with passive valves **11***a*, **11***b* (passive valve **11**) which respectively open in an outflow direction from the pump chamber **2**.

[0045] The first flow passage **8** and the second flow passage **9** are arranged so as to be capable of connecting to a methanol accommodating vessel (not shown in the drawing and, hereinafter, refereed to as an accommodating vessel). Concretely, the first flow passage **8** is arranged so as to be capable of connecting to the under side of the accommodating vessel and the second flow passage **9** is arranged so as to be capable of connecting to the upper side of the accommodating vessel. The passive valve **10** is a normal valve, which is, for example, made of rubber and opens in only one direction by fluid pressure. The passive valve **10** is provided in the first flow passage **8** which is the inflow passage and thus the passive valve **10** opens when a pressure

is applied in a suction direction of methanol directing to the pump chamber **2** but does not open even when a pressure is applied in a discharge direction of methanol directing to the accommodating vessel. On the other hand, the passive valve **11** is also a normal valve, which is, for example, made of rubber and the passive valve **11** is provided in the second flow passage **9**, which is the outflow passage. The passive valve **11** opens when a pressure is applied in a discharge direction of methanol directing to the accommodating vessel but does not open even when a pressure is applied in a suction direction of methanol directing to the pump chamber **2**. Therefore, methanol is sucked to the pump chamber **2** from the accommodating vessel through the first flow passage **8** and the inflow passage **3**, and is discharged from the pump chamber **2** to the accommodating vessel through the inflow passage **3** and the second flow passage **9**. In the embodiment of the present invention, the first flow passage **8***a* and the second flow passage **9***a*, and the first flow passage **8***b* and the second flow passage **9***b* are respectively connected to different accommodating vessels.

[**0046**] The inflow side active valves **5***a*, **5***b* are capable of being individually opened or closed by a drive actuator (not shown in **FIG. 1**).

[**0047**] Eight outflow passages **4***a* through **4***h* are respectively connectable to eight cells (not shown in the drawing) as power generating parts of the DMFC. The methanol discharged from the outflow passages **4***a* through **4***h* are capable of being supplied to the anode electrodes of the cells.

[**0048**] The outflow side active valves **6***a* through **6***h* are individually openable/closable by a drive actuator (not shown in **FIG. 1**) similarly to the inflow side active valves **5***a*, **5***b*.

[**0049**] The movable body **13** in this embodiment of the present invention is a piston (hereinafter, referred to as a piston **13**) which is reciprocated within a cylinder **14** connected to the pump chamber **2**. The piston **13** is fixed on the upper end of a piston rod **15** in the drawing. The piston rod **15** is connected to a drive actuator (not shown in **FIG. 1**) and is reciprocated within the cylinder **14** by the drive actuator.

[**0050**] In this pump **1** constructed as described above, when the outflow side active valves **6***a* through **6***h* are in a closed state and at least one of the inflow side active valves **5***a*, **5***b* is in an open state, the piston **13** moves downward in the drawing and methanol is sucked into the pump chamber **2**. On the other hand, when the inflow side active valves **5***a*, **5***b* are in a closed state and at least one of the outflow side active valves **6***a* through **6***h* is in an open state, the piston **13** moves upward in the drawing and the methanol is discharged to a cell from the pump chamber **2**. When the outflow side active valves **6***a* through **6***h* are in a closed state and at least one of the inflow side active valves **5***a*, **5***b* is in an open state and, in this state, when the piston **13** moves upward in the drawing, the methanol is discharged to the accommodating vessel. A concrete control method for the pump **1** will be described in detail below.

[**0051**] The concrete structure of the multi-channel pump **1** provided with the above-mentioned basic structure will be described below. **FIG. 2** is a perspective view showing the concrete structure of the multi-channel pump shown in **FIG. 1** that is viewed from the discharge side of methanol. **FIG. 3** is a perspective view showing the multi-channel pump shown in **FIG. 2** that is viewed from the "X" direction. **FIG. 4** is a perspective view showing the multi-channel pump shown in **FIG. 2** which is cut in the "Y" cross section **FIG. 5** is an exploded perspective view showing an opening/closing mechanism of active valves of the multi-channel pump shown in **FIG. 2**. **FIG. 6** is a plan view showing the structure of inflow passages and outflow passages of the multi-channel pump shown in **FIG. 2**.

[**0052**] In the pump **1** shown in **FIGS. 2 through 4**, a base part **24** and a bracket **31** are connected to each other with screws through four pole braces **32** to construct a main body frame. On a base plate **25** and a bracket **31** constructing the base part **24** are fixed and held a driving mechanism for the piston **13** and an opening/closing mechanism for the inflow side active valves **5***a*, **5***b* and the outflow side active valves **6***a* through **6***h*. The arrows in **FIG. 4** show an example of the flowing of methanol in the pump **1**.

[**0053**] The bracket **31** is provided with a semi-cylindrical extended part **31***a* which is extended downward in **FIG. 2**. On the inner peripheral side of the extended part **31***a* are formed concave grooves **31***b*, **31***b* at two positions by a pitch of approximately 180° which construct the detent portion of the piston **13** along with protruded parts **18***a* of a slide plate **18** described below.

[**0054**] The base part **24** includes a base plate **25**, in which the pump chamber **2**, the inflow passages **3**, the outflow passages **4**, the first flow passages **8** and the second flow passages **9** are formed, an active valve plate **29** integrally provided with the inflow side active valves **5** and the outflow side active valves **6**, a valve presser plate **26** pressing the active valve plate **29**, a port **27** formed with outflow ports **40** (**40***a* through **40***h*) which are aperture ends of the outflow passages **4**, suction ports **80** (**80***a*, **80***b*) which are aperture ends of the first flow passages **8**, and discharge ports **90** (**90***a*, **90***b*) which are aperture ends of the second flow passages **9**, and a port presser plate **28** pressing the port **27**. The valve presser plate **26**, the active valve plate **29**, the base plate **25**, the port **27**, and the port presser plate **28** are laminated in this order.

[**0055**] The piston **13** is moved so as to be reciprocated in the inside of the cylinder **14** by a piston drive motor **51**. The cylinder **14** is integrally formed with the base plate **25** so as to be connected to the pump chamber **2** (see **FIG. 4**). The structure of the driving mechanism for the piston **13** will be described below.

[**0056**] The piston drive motor **51** is concretely a stepping motor and fixed to the bracket **31** with a screw. In this embodiment of the present invention, the piston drive motor **51** rotates in forward and reverse directions. A small gear **53** is fixed on the tip end of the output shaft of the piston drive motor **51**. An idle gear **19** is rotatably supported by a fixed shaft **20** which is fixed to the bracket **31** so as to be engaged with the small gear **53**. A gear **17** is rotatably held by a bearing **61** which is fixed on the outer peripheral part of the cylinder **14** so as to be engaged with the idle gear **19**.

[**0057**] The gear **17** is formed in an approximately bottomed cylindrical shape. On the center portion of the bottom part of the gear **17** is fixed a nut **16** as a rotation body on which a female screw **16***a* is formed. On the other hand, a male screw **15***a* is formed on the outer peripheral part of the

piston rod **15** to which the piston **13** is fixed on one end and the male screw **15***a* is threadedly engaged with the female screw **16***a*. Further, on the other end of the piston rod **15** is fixed a slide plate **18** in which there are protruded parts **18***a*, **18***a* engaging with the concave grooves **31***b* formed in the extended part **31***a* of the bracket **31** are formed at two positions by a pitch of approximately 180° (see **FIG. 3**). The rotation of the piston **13** is prevented by the protruded parts **18***a* and the concave grooves **31***b*.

[**0058**] On the outer peripheral side of the piston **13** are fixed sealing members (oil-seal) **63**, **63** for preventing the leakage of methanol which is sucked in the pump chamber **2**.

[**0059**] In the driving mechanism for the piston **13** constructed as described above, when the piston drive motor **51** is rotated, the driving force is transmitted to the gear **17** through the small gear **53** and the idle gear **19**. When the driving force of the piston drive motor **51** is transmitted to the gear **17**, the nut **16** is rotated together with the gear **17**. The rotation preventing or detent mechanism for the piston **13** is structured on the other end side of the piston rod **15** on which the male screw **15***a* is formed to engage threadedly with the female screw **16***a* of the nut **16**. Therefore, the rotary motion of the nut **16** is converted into the straight motion of the piston **13**. The piston **13** is reciprocated in the inside of the cylinder **14** by the piston drive motor **51** that rotates in the both directions.

[**0060**] The inflow side active valves **5** and the outflow side active valves **6** are capable of being individually opened or closed by a valve opening/closing drive motor **52**. The opening/closing mechanism of the inflow side active valves **5** and the outflow side active valves **6** includes a cam **36** and a plate spring **37** in addition to the valve opening/closing drive motor **52** as principal components (see **FIG. 5**). The structure of the opening/closing mechanism for the inflow side active valves **5** and the outflow side active valves **6** will be described below.

[**0061**] The valve opening/closing drive motor **52** is concretely a stepping motor which is fixed to the bracket **31** with a screw. In this embodiment of the present invention, the valve opening/closing drive motor **52** rotates in one direction (counter clockwise direction in **FIG. 5**). A small gear **54** is fixed at the tip end of the output shaft of the valve opening/closing drive motor **52**. A cam **36** is provided with a gear **36***a* engaging with the small gear **54** and rotatably supported by a bearing **62** that is fixed on the outer peripheral part of the cylinder **14**. In the embodiment of the present invention, the cam **36** is rotated by the valve opening/closing drive motor **52** in the clockwise direction in **FIG. 5**. The bearing **61** and the bearing **62** are fixed on the outer peripheral part of the cylinder **14** such that they overlap each other in the moving direction of the piston **13**. The cam **36** and the gear **17** are disposed so as to overlap each other in the moving direction of the piston **13** (see **FIG. 4**).

[**0062**] The cam **36** is formed in a cylindrical shape and provided with a flange part. The gear **36***a* is formed on the outer peripheral face of the flange part of the cam **36**. On the outer peripheral face of the cam **36** is fixed a pin **38** protruding in the radial direction for causing the inflow side active valves **5** and the outflow side active valves **6** to open and close.

[**0063**] The plate spring **37** includes, as shown in **FIG. 5**, a ring-shaped center part **37***a*, ten arm parts **37***b* extended from the center part **37***a* outward in the radial direction in a spiral manner, valve holding parts **37***c* respectively formed at the tip end of the arm part **37***b*, and a tip end part **37***d* which is formed so as to be bent upward in the drawing from the outer end of the valve holding part **37***c* in the radial direction and then bent toward the center part **37***a*. The tip end part **37***d* is provided with a sliding part **37***d***1** capable of contacting with the pin **38** and a guide part **37***d***2** which is bent from the sliding part **37***d***1** obliquely upward in the drawing to guide the pin **38** to the sliding part **37***d***1**. The notational symbols are shown for some of the arm parts **37***b*, the valve holding parts **37***c*, and the tip end parts **37***d* of the plate spring **37** for convenience.

[**0064**] The plate spring **37** is fixed to the outer peripheral face of the cylinder **14** through its center part **37***a*. In the state that the plate spring **37** is fixed to the outer peripheral face of the cylinder **14** and the cam **36** is supported by the bearing **62** fixed on the outer peripheral part of the cylinder **14**, the pin **38** is positioned on the upper side of the under face of the sliding part **37***d***1** and on the under side of the upper end portion of the guide part **37***d***2** in the vertical direction in **FIG. 5**. Therefore, when the cam **36** is rotated, the pin **38** is guided to the under face of the sliding part **37***d***1** through the guide part **37***d***2**, and the arm part **37***b* is deflected and thus the valve holding part **37***c* and the tip end part **37***d* are lift upward in **FIG. 5**.

[**0065**] The active valve plate **29** is made, for example, of rubber and integrally provided with the inflow side active valves **5***a*, **5***b* and the outflow side active valves **6***a* through **6***h* which are concentrically formed with a pitch of equal angle. The inflow side active valves **5***a*, **5***b* and the outflow side active valves **6***a* through **6***h* are normally urged to be in a closed state by the elasticity of rubber of the active valve plate **29**. Concretely, they are urged downward in **FIG. 5**. In addition, the upper ends of the inflow side active valves **5***a*, **5***b* and the outflow side active valves **6***a* through **6***h* are respectively held by the valve holding parts **37***c* of the plate spring **37**.

[**0066**] In the opening/closing mechanism of the inflow side active valves **5** and the outflow side active valves **6** constructed as described above, the driving force of the valve opening/closing drive motor **52** is transmitted to the gear **36***a* through the small gear **54**. When the driving force is transmitted to the gear **36***a*, the cam **36** is rotated and the pin **38** is also rotated together with the cam **36**. The pin **38** is guided to the under face side of the sliding part **37***d***1** through the guide part **37***d***2**, which causes the arm part **37***b* to be deflected, and the valve holding part **37***c* is lifted upward in **FIG. 5**. In other words, either one of the inflow side active valves **5***a*, **5***b* or the outflow side active valves **6***a* through **6***h* which are held in the valve holding parts **37***c* is lifted upward to be in an open state. When the pin **38** is further rotated and disengaged from the under face of the sliding part **37***d***1**, the active valve in the open state becomes to be in a closed state by the urging force. When the pin **38** is further rotated, the pin **38** is guided by the succeeding guide part **37***d***2** to the under face side of the sliding part **37***d***1** and the succeeding active valve becomes in an open state similarly to the above-mentioned case. These operations are repeated and the inflow side active valves **5***a*, **5***b*

and the outflow side active valves **6***a* through **6***h* which are respectively held in the valve holding parts **37***c* are successively opened and closed.

[**0067**] The pump chamber **2**, the inflow passages **3**, the outflow passages **4**, the first flow passages **8** and the second flow passages **9** are formed in the base plate **25** as described above.

[**0068**] The pump chamber **2** is formed in an approximately central part of the base plate **25** and provided with ten passages which radially extend toward the inflow side active valves **5***a*, **5***b* and the outflow side active valves **6***a* through **6***h* (see **FIG. 6**). A detector (not shown) for detecting the presence of bubbles may be provided in the pump chamber **2**.

[**0069**] The outflow passages **4***a* through **4***h* are formed so as to direct from the outflow side active valves **6***a* through **6***b* toward the outer side of the base plate **25**. The inflow passages **3***a*, **3***b* are respectively formed between the inflow side active valves **5***a*, **5***b* and the passive valves **10***a* and **11***a*, **10***b* and **11***b* formed in an umbrella-shape (see **FIGS. 4 and 6**). In addition, the first passages **8***a*, **8***b* are respectively formed on the outer side of the passive valves **10***a*, **10***b* and the second passages **9***a*, **9***b* are formed on the outer side of the passive valves **11***a*, **11***b*.

[**0070**] **FIG. 7** is a timing chart showing the control method of the multi-channel pump in **FIG. 2**.

[**0071**] In the embodiment of the present invention, the pump **1** is controlled by a control method including a suction step "S1" in which the inflow side active valve **5** is opened and methanol is sucked into the pump chamber **2** from the first flow passage **8** by a suction operation of the piston **13**, an initial discharge step "S2" after the suction step "S1" in which the backlash of the pump **1** is eliminated by means of that methanol is discharged from the pump chamber **2** to the second flow passage **9** by the discharge operation of the piston **13** and then the inflow side active valve **5** is closed, and a discharge step "S3" after the initial discharge step "S2" in which an outflow side active valve **6** is successively opened and a prescribed amount of methanol is discharged by the discharge operation of the piston **13**. The control method will be described in detail below.

[**0072**] In the timing chart for the piston drive motor **51** in **FIG. 7**, the portions on the under side of the center horizontal line where the hatching is applied indicate states of a discharge operation in which the piston **13** is operated in the discharge direction (left direction in **FIG. 4**). The portion on the upper side of the center horizontal line where the hatching is applied indicates the state of a suction operation in which the piston **13** is operated in the suction direction (right direction in **FIG. 4**). In the timing chart for the valve opening/closing drive motor **52**, the portions where the hatching is applied indicate states in which the respective active valves are opened.

[**0073**] In the initial state, all of the inflow side active valves **5** and the outflow side active valves **6** are in the closed state. First, the valve opening/closing drive motor **52** is driven to make the inflow side active valve **5***b* to be in an open state. After that, the piston **13** is moved in the discharge direction of methanol by the piston drive motor **51**. The discharge operation by the piston **13** is performed to the top dead point (home position) and the origin-reset of the piston **13** is performed (origin-reset step "S0"). In this case, methanol is discharged to the second flow passage **9***b* from the pump chamber **2** through the passive valve **11***b* which is capable of being in an open state.

[**0074**] Next methanol is sucked into the pump chamber **2** (suction step "S1"). Concretely, under the open state of the inflow side active valve **5***b*, the piston drive motor **51** is driven to move the piston **13** in the suction direction of methanol. The suction operation of the piston **13** is performed, for example, to the bottom dead point of the piston **13**. Methanol is sucked into the pump chamber **2** from the first flow passage **8***b* through the passive valve **10***b* which is capable of being in an open state by the suction operation of the piston **13**,

[**0075**] Next, after the backlash of the pump **1** is eliminated by means of that methanol is discharged from the pump chamber **2** by the discharge operation of the piston **13**, the inflow side active valve **5***b* is closed (initial discharge step "S2"). Concretely, under the open state of the inflow side active valve **5***b*, the piston **13** is moved in the discharge direction of methanol by the piston drive motor **51** until the backlash of pump **1** is eliminated. Methanol is discharged to the second flow passage **9***b* by the discharge operation of the piston **13** through the passive valve **11***b* which comes to be in an open state, and after that the inflow side active valve **5***b* is closed by the valve opening/closing drive motor **52**.

[**0076**] Next, a prescribed outflow side active valve **6** is successively opened and a predetermined amount of methanol is discharged by the discharge operation of the piston **13** (discharge step "S3"). Concretely, firs, the outflow side active valve **6***f* is set to be in an open state by the valve opening/closing drive motor **52**, and the discharge operation of the piston **13** is performed by the piston drive motor **51** to discharge a predetermined amount of methanol to the outflow passage **4***f* After that, the outflow side active valve **6***f* is set to be in a closed state and the outflow side active valve **6***g* is set to be in an open state by the valve opening/closing drive motor **52** and the discharge operation of the piston **13** is performed to discharge a predetermined amount of methanol from the outflow passage **4***g*. In this manner, while the opening/closing operations of the outflow side active valves **6***f*, **6***g*, **6***h*, **6***a*, **6***b*, **6***c*, **6***d*, **6***e* are successively performed by the valve opening/closing drive motor **52** in this order, a prescribed amount of methanol is discharged from the outflow passages **4***f*, **4***g*, **4***h*, **4***a*, **4***b*, **4***c*, **4***d*, **4***e* by the discharge operation of the piston **13** in this order.

[**0077**] In the case that a detector for detecting the presence of bubbles is provided in the pump chamber **2**, when the detector detects bubbles, the discharge operation of the piston **13** is, for example, performed under the state that the inflow side active valve **5***b* is set to be in an open state. The bubbles can be discharged to the second flow passage **9***b* through the passive valve **11***b* capable of being in an open state. Further, at the starting time of the pump **1** or after the exchange of the accommodating vessel, bubbles can be discharged by performing similar operations.

[**0078**] When the structure of the multi-channel pump **1** shown in **FIGS. 2 through 6** is employed, the opening/closing operation of the inflow side active valve **5***a*, is performed by the valve opening/closing drive motor **52** even though a series of the above-mentioned operations are not used. However, a series of the above-mentioned operations

are not affected even when the inflow side active valve **5***a* is set to be in an open state as long as the piston **13** is not moved.

[**0079**] As described above, the multi-channel pump **1** in accordance with the embodiment of the present invention is provided with the outflow side active valves **6***a* through **6***b*. Therefore, the reverse flow of methanol from the outflow passages **4***a* through **4***h* to the pump chamber **2** can be surely prevented. Further, the discharge destinations of methanol which is discharged from the outflow passages **4***a* through **4***h* can be controlled by the outflow side active valves **6***a* through **6***h*. In addition, in the multi-channel pump **1**, methanol is discharged from the respective outflow passages **4***a* through **4***h* by the discharge operation of one piston **13**. Therefore, discharging performance is uniform in comparison with the case when separate pistons are provided for the respective outflow passages **4***a* through **4***h* and thus the variation of discharge amount from the respective outflow passages **4***a* through **4***h* can be restrained Accordingly, an appropriate amount of methanol can be accurately discharged in the multi-channel pump **1**.

[**0080**] In this embodiment of the present invention, two inflow passages **3***a,* **3***b* are connected to the pump chamber **2** to which eight outflow passages **4***a* through **4***h* are connected. Therefore, the inflow passages **3***a,* **3***b* can be commonly used for a plurality of outflow passages **4***a* through **4***h* and thus the structure of the pump **1** can be simplified. Further, since only one piston **13** is used and thus the structure of the pump **1** can be further simplified. Accordingly, the downsizing of the pump **1** can be attained and thus the pump **1** can be mounted in a small-sized device such as, for example, a DMFC used in a portable electronic device.

[**0081**] In this embodiment of the present invention, the drive mechanism for the piston **13** includes a piston rod **15** on which a male screw **15***a* is formed on its outer peripheral part, a nut **16** on which a female screw **16***a* for threadedly engaging with the male screw **15***a* is formed, and a piston drive motor **51** which rotationally drives the nut **16** through a gear **17** and the like. Therefore, the moving quantity of the piston **13** can be controlled with the pitch of the screw and the quantity of rotation of the piston drive motor **51**. Accordingly, a minute flow rate can be discharged from the outflow passages **4***a* through **4***h*. Further, the accuracy of a discharge flow rate can be enhanced. Especially, in this embodiment of the present invention, since the piston drive motor **51** is a stepping motor, the moving quantity of the piston **13** can be further accurately controlled. For example, in the pump **1** in accordance with these embodiment of the present invention, a minute flow rate such as, for example, 0.01 cc can be accurately discharged from the respective outflow passages **4***a* through **4***h*. Further, a minute flow rate can be intermittently discharged.

[**0082**] In this embodiment of the present invention, the multi-channel pump **1** is provided with two inflow passages **3***a,* **3***b*. Therefore, when accommodating vessels are connected to the respective inflow passages **3***a,* **3***b,* the exchanging work of the accommodating vessel becomes easy.

[**0083**] In this embodiment of the present invention, the one end sides of the inflow passages **3***a,* **3***b* are connected to the pump chamber **2** through the inflow side active valves **5***a,* **5***b*. Therefore, the reverse flow from the pump chamber **2** to the inflow passages **3***a,* **3***b* can be surely prevented

[**0084**] In the control method for the multi-channel pump **1** in this embodiment of the present invention, the initial discharge step "**S2**" for eliminating the backlash of the pump **1** is provided between the suction step "**S1**" and the discharge step "**S3**". Therefore, in the discharge step "**S3**", the relationship between the moving quantity of the piston **13** and the discharge amounts from the outflow passages **4***a* through **4***h* can be maintained in a linear manner from the beginning. Accordingly, when the moving quantity of the piston **13** is appropriately controlled, the discharge amount of the fluid from the outflow passage **4***f* which is firstly discharged in the discharge step "**S3**" can be accurately controlled and thus the variation of the discharge amounts from the respective outflow passages **4***a* through **4***h* can be reduced.

[**0085**] In addition, in the control method for the multi-channel pump **1** in accordance with this embodiment of the present invention, methanol is sucked in the suction step "**S1**" which is required to discharge from the outflow passages **4***a* through **4***h* by a plurality of times in the discharge step "**S3**". Therefore, even when the discharge amount of methanol which is discharged from the respective outflow passages **4***a* through **4***h* is a significantly small amount, the suction amount can be ensured to some extent. For example, even when each of the discharge amounts from the respective outflow passages **4***a* through **4***h* is 1 (μl), the suction amount can be totally 8 (μl). Accordingly, the capacity of the pump **1** can be increased and the self-feeding performance can be easily attained.

[**0086**] Although the present invention has been shown and described with reference to specific embodiments, various changes and modifications will be apparent to those skilled in the art from the teachings herein.

[**0087**] For example, the multi-channel pump **1** in accordance with an embodiment of the present invention is a piston type pump in which the piston **13** is used as a movable body. However, the present invention is not limited to a piston type pump and a diaphragm type pump provided with only one movable body may be used. Further, the present invention may be applied to other types of pumps.

[**0088**] Further, in the embodiment of the present invention, the inflow side active valves **5** and the outflow side active valves **6** are driven so as to be opened or closed by the valve opening/closing drive motor **52** which is a common drive actuator. However, drive actuators may be provided for each of the respective active valves or a plurality of drive actuators may be provided each of which opens and closes some of the active valves.

[**0089**] In addition, the piston drive motor **51** is not limited to a stepping motor and may utilize other types of a motors. Further, the drive actuator for the piston **13** is not limited to a motor and various types of a drive actuators may be used.

[**0090**] In addition, in the embodiment shown of the present invention, two inflow passages **3***a,* **3***b* are provided, but only one inflow passage may be provided. On the other hand, three or more inflow passages may be provided

[**0091**] Further, the control method for the multi-channel pump **1** is not limited to the above mentioned control method. For example, the pump **1** may be controlled by a control method which includes a suction step in which the inflow side active valve **5** is opened and methanol is sucked

into the pump chamber **2** by the suction operation of the piston **13** and then the inflow side active valve **5** is closed, an initial discharge step after the suction step in which one of the outflow side active valves **6** is opened and the methanol is discharged from the pump chamber **2** by the discharge operation of the piston **13** to eliminate the backlash of the pump **1**, and a discharge step after the initial discharge step in which an outflow side active valve **6** is successively opened and a prescribed amount of methanol is discharged by the discharge operation of the piston **13**.

[**0092**] Also in this case, the initial discharge step for eliminating the backlash of the pump **1** is provided between the suction step and the discharge step. Therefore, in the discharge step, the relationship between the moving quantity of the piston **13** and the discharge amount from the outflow passage **4** can be maintained in a linear manner from the beginning. Thus, the variation of the discharge amounts from the respective outflow passages **4** can be reduced In addition, methanol is collectively sucked in the suction step which is required to discharge from the outflow passage **4** by a plurality of times. Therefore, even when the discharge amount of methanol which is discharged from the respective outflow passages **4** is a significantly small amount, the suction amount can be ensured to some extent Accordingly, the capacity of the pump **1** can be increased and the self-feeding performance can be easily attained

[**0093**] The fluid used is not limited to methanol and methanol aqueous solution. Ethanol (ethyl-alcohol) and its aqueous solution or another liquid may be used.

[**0094**] The application of the multi-channel pump in accordance with the embodiment of the present invention is not limited to a fuel cell. For example, the multi-channel pump may be used in the field of an analyzing device for chemical substance and may be used in substitution for a plurality of cylinder pump which is used in a dropping device of trace reagent

[**0095**] While the description above refers to particular embodiments of the present invention, it will be understood that many modifications may be made without departing from the spirit thereof The accompanying claims are intended to cover such modifications as would fall within the true scope and spirit of the present invention.

[**0096**] The presently disclosed embodiments are therefore to be considered in all respects as illustrative and not restrictive, the scope of the invention being indicated by the appended claims, rather than the foregoing description, and all changes which come within the meaning and range of equivalency of the claims are therefore intended to be embraced therein.

What is claimed is:

1. A multi-channel pump comprising:

a pump chamber,

an inflow passage for fluid which is connected to the pump chamber,

two or more outflow passages which are connected to the pump chamber,

outflow side active valves which are provided so as to correspond to the outflow passages; and

a movable body which is reciprocated to change a volumetric capacity of the pump chamber.

2. The multi-channel pump according to claim 1, wherein the movable body is a piston which is reciprocated within a cylinder that is connected to the pump chamber.

3. The multi-channel pump according to claim 2, further comprising:

a piston rod to which the piston is fixed;

a male screw formed on an outer peripheral part of the piston rod;

a rotation body which is formed with a female screw that threadedly engages with the male screw to make the piston reciprocate; and

a piston drive motor which drives the rotation body to rotate.

4. The multi-channel pump according to claim 3, wherein the piston drive motor is a stepping motor.

5. The multi-channel pump according to claim 1, wherein the inflow passage comprises two or more inflow passages.

6. The multi-channel pump according to claim 1, further comprising an inflow side active valve through which the inflow passage is connected to the pump chamber.

7. The multi-channel pump according to claim 6, further comprising:

a first flow passage provided in the inflow passage and having a passive valve which is capable of opening in an inflow direction to the pump chamber, and

a second flow passage provided in the inflow passage and having a passive valve which is capable of opening in an outflow direction from the pump chamber.

8. The multi-channel pump according to claim 1, further comprising:

liquid as the fluid; and

a detector for detecting presence of a bubble in the pump chamber.

9. The multi-channel pump according to claim 1, further comprising:

an inflow side active valve through which the inflow passage is connected to the pump chamber,

a drive actuator for inflow side active valve which drives to open and close the inflow side active valve;

a drive actuator for outflow side active valve which individually drives to open and close the outflow side active valves which are provided in the outflow passages; and

a piston as the movable body which is reciprocated within a cylinder that is connected to the pump chamber.

10. The multi-channel pump according to claim 9, further comprising:

a first flow passage provided in the inflow passage and having a passive valve which is capable of opening in an inflow direction to the pump chamber, and

a second flow passage provided in the inflow passage and having a passive valve which is capable of opening in an outflow direction from the pump chamber,

wherein the inflow side active valve is provided between the first flow passage, the second flow passage and the pump chamber.

11. The multi-channel pump according to claim 9, further comprising:

a valve opening/closing drive motor as the drive actuator for outflow side active valve; and

a cam which is moved by the valve opening/closing drive motor,

wherein the outflow side active valves which are provided so as to correspond to the outflow passages are individually opened and closed by the cam.

12. A control method for a multi-channel pump comprising:

providing a multi-channel pump comprising:

a pump chamber,

an inflow passage for fluid which is connected to the pump chamber,

two or more outflow passages which are connected to the pump chamber,

outflow side active valves which are provided so as to correspond to the outflow passages;

a movable body which is reciprocated to change a volumetric capacity of the pump chamber, and

an inflow side active valve through which the inflow passage is connected to the pump chamber,

a suction step in which the inflow side active valve is opened and the fluid is sucked into the pump chamber by a suction operation of the movable body and then the inflow side active valve is closed;

an initial discharge step after the suction step in which one of the outflow side active valves is opened and the fluid is discharged from the pump chamber by the discharge operation of the movable body to eliminate backlash of the pump, and

a discharge step after the initial discharge step in which a prescribed outflow side active valve is successively opened and a prescribed amount of the fluid is discharged by the discharge operation of the movable body.

13. A control method for a multi-channel pump comprising:

providing a multi-channel pump comprising:

a pump chamber,

an inflow passage for fluid which is connected to the pump chamber,

two or more outflow passages which are connected to the pump chamber,

outflow side active valves which are provided so as to correspond to the outflow passages;

a movable body which is reciprocated to change a volumetric capacity of the pump chamber,

a first flow passage provided in the inflow passage and having a passive valve which is capable of opening in an inflow direction to the pump chamber,

a second flow passage provided in the inflow passage and having a passive valve which is capable of opening in an outflow direction from the pump chamber, and

an inflow side active valve through which the inflow passage is connected to the pump chamber,

a suction step in which the inflow side active valve is opened and the fluid is sucked into the pump chamber from the first flow passage by a suction operation of the movable body;

an initial discharge step after the suction step in which the backlash of the pump is eliminated by means of that the fluid is discharged from the pump chamber to the second flow passage by the discharge operation of the movable body and then the inflow side active valve is closed, and

a discharge step after the initial discharge step in which a prescribed outflow side active valve is successively opened and a prescribed amount of the fluid is discharged by the discharge operation of the movable body.

* * * * *