A. T. CRIPPEN.

TILLS OR MONEY-DRAWERS.

No. 194,415. Patented Aug. 21, 1877.

Fig. 1.

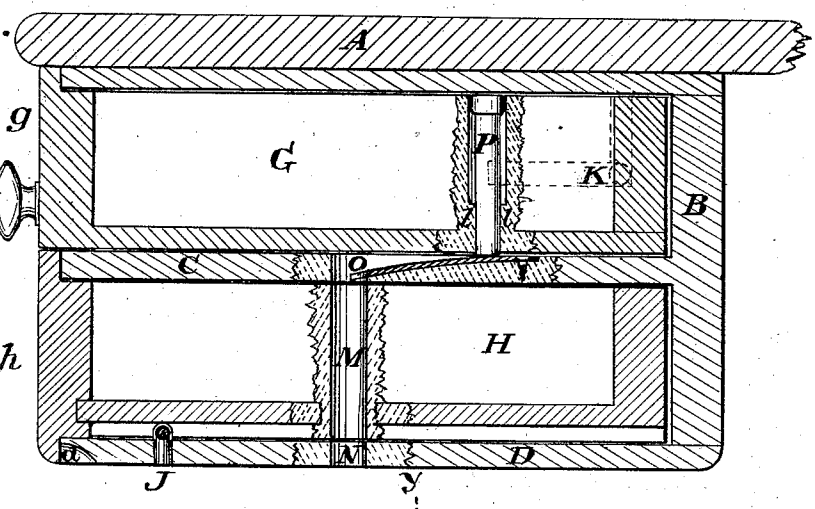

Fig. 2.

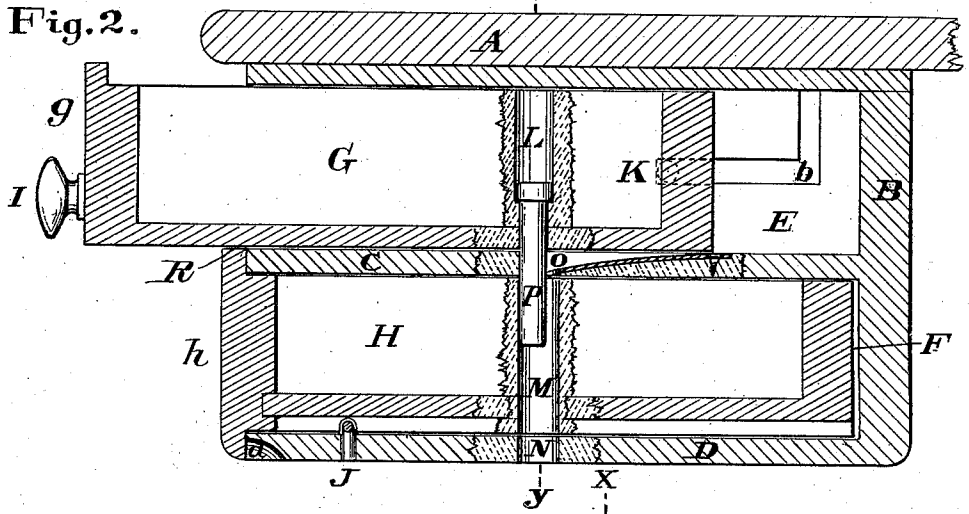

Fig. 3.

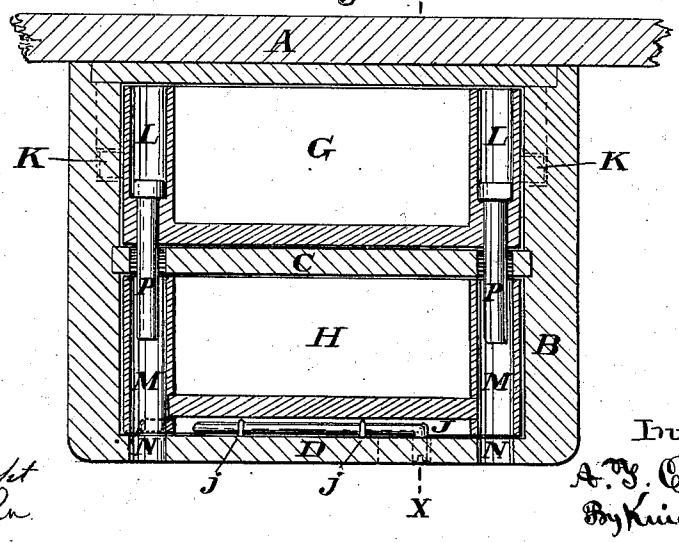

Attest
Walter Knight
Harry Knight

Inventor.
A. T. Crippen
By Knight Bros.
Attys.

N. PETERS, PHOTO-LITHOGRAPHER, WASHINGTON, D. C.

UNITED STATES PATENT OFFICE.

ABRAHAM T. CRIPPEN, OF CINCINNATI, OHIO.

IMPROVEMENT IN TILLS OR MONEY-DRAWERS.

Specification forming part of Letters Patent No. **194,415**, dated August 21, 1877; application filed March 6, 1877.

To all whom it may concern:

Be it known that I, ABRAHAM T. CRIPPEN, of Cincinnati, Hamilton county, Ohio, have invented a new and useful Till or Money-Drawer, of which the following is a specification:

This device consists, essentially, of two drawers, arranged one above the other and in separate casings. Of these drawers the uppermost is merely a blind or sham, and is the only one provided with a visible knob or handle, and which is therefore liable to be mistaken for the handle of the drawer proper, the lower and actual money-drawer having no visible means of handling. In order to make the illusion as perfect as possible, the handle of the blind is placed near the parting of the two drawers, and that parting is made as inconspicuous as possible. In consequence of this arrangement there appears, to a casual observer, to be but one drawer, of which the knob aforesaid appears to be the handle. A stranger, therefore, attempting to open the drawer, uses the knob and withdraws the blind the short distance permitted by my self-locking device, in which a pair of gravitating bolts, dropping into sockets provided for them at the same moment, lock the two drawers, the sham drawer in the partially open and the drawer proper in the closed position. From this condition the two drawers can be released only by the use of proper instruments.

In the accompanying drawings, Figure 1 is a longitudinal section of a till embodying my invention, the same being shown in the closed condition. Fig. 2 is a similar section, showing the sham drawer opened and the lock sprung so as to fix said sham drawer in the open and the true drawer in the closed condition. The location of these sections is indicated by line *x x* in Fig. 3. Portions of the sides of the drawers are broken away in order to expose the locking devices. Fig. 3 is a transverse section at the line *y y*, Fig. 2.

A may represent a portion of an ordinary store-counter, to the under side of which the casing B of my till may be screwed or otherwise securely attached. My casing is separated by horizontal partition C, parallel with bottom D, into an upper compartment, E, and a lower compartment, F.

Fitted to the compartments E and F, respectively, are drawers G and H, the fronts of which, *g* and *h*, are flush with each other, and in such close juxtaposition as to appear to a casual observer as one drawer. This illusion is still further favored by the use, upon the upper drawer, of a single knob, I, as near as practicable to the lower drawer, so as to seem like the handle of the single drawer, of which the two drawers G and H appear to consist. The drawer G is merely a blind or sham, for the purpose of deception. The drawer proper, H, is capable of being opened by the operator inserting his fingers in the recess *d* in that part of bottom D immediately in rear of the down-projecting front *h* of drawer H.

As an additional security, a bolt, J, sliding in ways *j* upon the floor D, may be capable of being pushed into a socket, *h'*, in drawer H.

The sham drawer G has a pair of studs, (see dotted lines K,) which studs, occupying grooves *b* in the casing, arrest the opening of the sham drawer at the point shown in Fig. 2.

The sides of the sham drawer have two vertical orifices, L, having shoulders or contractions, *l*, which orifices, in the open position of said drawer, as in Fig. 2, communicate with other vertical orifices, M, in the sides of the drawer proper, H, when the latter is in its closed condition, and the orifices M also communicate with like orifices N, which extend entirely through the floor D.

Sloping tracks O, faced with a smooth piece of metal, extend forward and downward through partition C to the rear margins of orifices M.

The orifices L are occupied by headed metallic pins or gravitating bolts P, which, in the normal or closed condition of the sham drawer G, rest upon the higher portions of the inclined tracks O. These bolts, as the sham drawer is drawn forward, follow the inclined tracks O until they drop over the lower ends of said tracks into the orifices M in the drawer proper, which they thus effectually lock to its shut position, and at the same instant also lock the sham drawer to its open position, and thus foil the pilferer in his attempts to shut the drawer G.

When the proprietor wishes to reclose the sham drawer, he (by means of rods or sticks,

such as common lead-pencils) pushes up the gravitating bolts P until their lower extremities are higher than those of the inclined tracks O, when the said drawer is easily restored to its closed position, as indicated in Fig. 1.

The stationary partition or floor C is at all times hidden by the front portion of one or other drawer, as at R, or by both.

I claim—

1. In a till or money-drawer, a pair of drawers, G and H, mounted one above the other, and separated by a stationary partition, C, hidden by the front portion *g* or *h* of one or both drawers, said portions being flush when closed and in close contact, and the upper one only provided with a visible handle, I, in combination with stop K *b*, orifices L M N, and gravitating bolts P, substantially as set forth.

2. The combination of the false and true drawers G and H, separated by horizontal partition C, and of which the uppermost or false drawer only has a visible handle, and, when drawn fully out, operates to lock the true drawer by the liberation of one or more gravitating bolts, P, substantially as set forth.

In testimony of which invention I hereunto set my hand.

A. T. CRIPPEN.

Attest:
GEO. H. KNIGHT,
L. H. BOND.