(12) INTERNATIONAL APPLICATION PUBLISHED UNDER THE PATENT COOPERATION TREATY (PCT)

(19) World Intellectual Property Organization
International Bureau

(43) International Publication Date
17 December 2020 (17.12.2020)

WIPO | PCT

(10) International Publication Number
WO 2020/249476 A1

(51) International Patent Classification:
F01C 7/00 (2006.01) *F04C 19/00* (2006.01)
F04C 7/00 (2006.01)

(21) International Application Number:
PCT/EP2020/065593

(22) International Filing Date:
05 June 2020 (05.06.2020)

(25) Filing Language: English

(26) Publication Language: English

(30) Priority Data:
1908275.9 10 June 2019 (10.06.2019) GB

(71) Applicant: **EDWARDS LIMITED** [GB/GB]; Innovation Drive, Burgess Hill Sussex RH15 9TW (GB).

(72) Inventors: **STONES, Ian David**; Edwards Limited, Innovation Drive, Burgess Hill Sussex RH15 9TW (GB).
DE BOCK, Andries; Edwards Limited, Innovation Drive, Burgess Hill West Sussex RH15 9TW (GB).

(74) Agent: **ARNOLD, Emily**; Edwards Limited, Innovation Drive, Burgess Hill Sussex RH15 9TW (GB).

(81) Designated States *(unless otherwise indicated, for every kind of national protection available)*: AE, AG, AL, AM, AO, AT, AU, AZ, BA, BB, BG, BH, BN, BR, BW, BY, BZ, CA, CH, CL, CN, CO, CR, CU, CZ, DE, DJ, DK, DM, DO, DZ, EC, EE, EG, ES, FI, GB, GD, GE, GH, GM, GT, HN, HR, HU, ID, IL, IN, IR, IS, JO, JP, KE, KG, KH, KN, KP, KR, KW, KZ, LA, LC, LK, LR, LS, LU, LY, MA, MD, ME, MG, MK, MN, MW, MX, MY, MZ, NA, NG, NI, NO, NZ, OM, PA, PE, PG, PH, PL, PT, QA, RO, RS, RU, RW, SA, SC, SD, SE, SG, SK, SL, ST, SV, SY, TH, TJ, TM, TN, TR, TT, TZ, UA, UG, US, UZ, VC, VN, WS, ZA, ZM, ZW.

(84) Designated States *(unless otherwise indicated, for every kind of regional protection available)*: ARIPO (BW, GH,

(54) Title: A PUMPING SYSTEM INCLUDING A LIQUID RING VACUUM PUMP

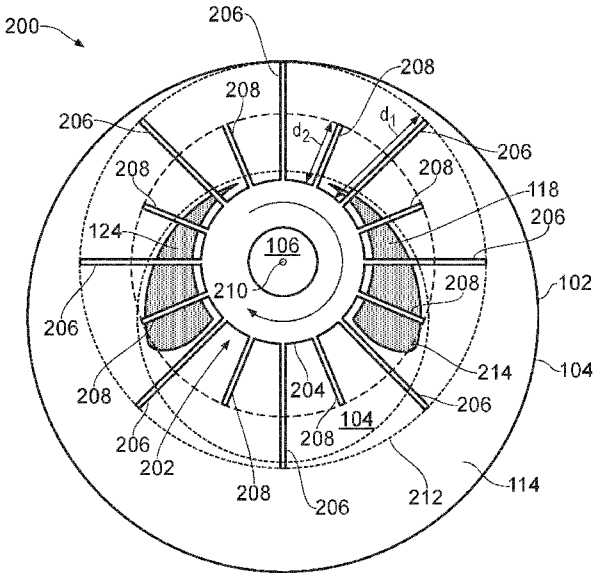

FIG. 2

(57) Abstract: A pumping system (500) comprising: a liquid ring pump (502); a motor (504) configured to drive the pump (502); and a variable speed drive (508) configured to control the motor (504). The pump (502) comprises: a pump housing; and an impeller (202) mounted eccentrically in the pump housing. The impeller (202) comprises: a central impeller hub (204); and a plurality of impeller vanes extending outwards from the hub (204), the plurality of impeller vanes extending along at least part of an axial length of the hub (204); the plurality of vanes comprises a first vane (206) and a second vane (208). A first radial distance between a radially outer surface of the hub (204) and a radially outer edge of the first vane (206) is different to a second radial distance between the radially outer surface of the hub (204) and a radially outer edge of the second vane (208).

WO 2020/249476 A1

[Continued on next page]

GM, KE, LR, LS, MW, MZ, NA, RW, SD, SL, ST, SZ, TZ, UG, ZM, ZW), Eurasian (AM, AZ, BY, KG, KZ, RU, TJ, TM), European (AL, AT, BE, BG, CH, CY, CZ, DE, DK, EE, ES, FI, FR, GB, GR, HR, HU, IE, IS, IT, LT, LU, LV, MC, MK, MT, NL, NO, PL, PT, RO, RS, SE, SI, SK, SM, TR), OAPI (BF, BJ, CF, CG, CI, CM, GA, GN, GQ, GW, KM, ML, MR, NE, SN, TD, TG).

Published:

— *with international search report (Art. 21(3))*

A PUMPING SYSTEM INCLUDING A LIQUID RING VACUUM PUMP

FIELD OF THE INVENTION

The present invention relates to pumping systems comprising liquid ring pumps.

BACKGROUND

Liquid ring pumps are a known type of pump which are typically commercially used as vacuum pumps and as gas compressors. Examples of liquid ring pumps include single-stage liquid ring pumps and multi-stage liquid ring pumps. Single-stage liquid ring pumps involve the use of only a single chamber and impeller. Multi-stage liquid ring pumps (e.g. two-stage) involve the use of multiple chambers and impellers connected in series.

Figure 1 is a schematic illustration (not to scale) showing a front-view cross section of a conventional single-stage liquid ring pump 100.

The liquid ring pump 100 comprises a pump housing 102 with a chamber 104 therein, a shaft 106 extending into the chamber 104, and an impeller 108.

The impeller 108 comprises a central hub 110 mounted to the shaft 106, and a plurality of vanes 112 which extend outwards from the central hub 110. The vanes 112 extend along the axial length of the central hub 110, the axial length of the hub 110 being perpendicular to the page of Figure 1. As is the case in Figure 1, the vanes 112 may extend outwards from the hub 110 in a direction that is oblique to the surface of the hub 110 in a direction that has a vector component that is radial and a vector component that is tangential with respect to the surface of the hub. Alternatively, the vanes 112 may extend radially outwards from the hub 110 perpendicularly to the surface of the hub 110. The central hub 110 and the vanes 112 (and/or the shaft, 106) may be integrally formed. The vanes 112 may be curved in the radial direction.

The impeller 108 and shaft 106 are positioned eccentrically within the chamber 104 of the liquid ring pump 100 such that the clearance between the

tip of the vanes 112 and the wall of the chamber 104 varies around the circumference of the housing 102.

A drive system such as a motor (not shown) is operably connected to the shaft 106 to drive the shaft 106.

In operation, the chamber 104 is partially filled with an operating liquid 114 (also known as service liquid). When the drive system drives the shaft 106 and the impeller 108, thereby causing the shaft 106 and impeller 108 to rotate (as indicated in Figure 1 by an arrow and the reference numeral 115), the operating liquid 114 forms a liquid ring on the inner wall of the chamber 104, thereby providing a seal that isolates individual gas volumes between adjacent impeller vanes 112. The impeller 108 and shaft 106 are positioned eccentrically to the liquid ring, which results in a cyclic variation of the gas volumes enclosed between adjacent vanes 112 of the impeller 108 and the liquid ring.

A gas inlet duct 116 leads to an inlet opening 118 located within the chamber 104. The inlet opening 118 is within a region of the chamber 104 in which the vanes 112 of the rotating impeller 108 emerge from the liquid ring. In this region, the volumes between adjacent impeller vanes 112 and the liquid ring enlarge as the impeller 108 rotates. As a result of the enlarging volumes (and thus decreasing gas pressure), gas is sucked into the chamber 104 through the inlet opening 118. Thus, the portion of the chamber 104 where the liquid ring is further away from the shaft 106 may act as a gas intake zone. Gas flow into the liquid ring pump 100 via the inlet duct 116 and the inlet opening 118 is indicated by an arrow and the reference numeral 120.

An outlet gas duct 122 leads from an outlet opening 124 located within the chamber 104. The outlet opening 124 is within a region of the chamber 104 in which the vanes 112 of the rotating impeller 108 penetrate the liquid ring. In this region, the gas volumes between adjacent impeller vanes 112 reduce in volume as the impeller 108 rotates. As a result of the decreasing volumes (and thus increasing gas pressure), gas is forced out of the chamber 104 through the outlet opening 124. Thus, the portion of the chamber 104 where the liquid ring is closer to the shaft 106 may act as a gas discharge zone. Gas flow out of the

liquid ring pump 100 via the outlet opening 124 and the outlet duct 122 is indicated by an arrow and the reference numeral 126.

SUMMARY OF THE INVENTION

In a first aspect, the present invention provides a pumping system comprising a liquid ring pump, a motor configured to drive the liquid ring pump, and a variable speed drive (VSD) configured to control the motor. The liquid ring pump comprises a pump housing, and an impeller mounted eccentrically in the pump housing. The impeller comprises a central impeller hub, and a plurality of impeller vanes extending outwards from the central impeller hub, the plurality of impeller vanes extending along at least part of an axial length of the central impeller hub. The plurality of vanes comprises a first impeller vane and a second impeller vane. A first radial distance between a radially outer surface of the central impeller hub and a radially outer edge of the first impeller vane is different to a second radial distance between the radially outer surface of the central impeller hub and a radially outer edge of the second impeller vane.

The plurality of impeller vanes may comprise a first plurality of first impeller vanes, wherein for each first impeller vane, a radial distance between the radially outer surface of the central impeller hub and a radially outer edge of that first impeller vane is substantially equal to the first radial distance. The plurality of impeller vanes may comprise a second plurality of second impeller vanes, wherein for each second impeller vane, a radial distance between the radially outer surface of the central impeller hub and a radially outer edge of that second impeller vane is substantially equal to the second radial distance. The first radial distance may be greater than the second radial distance. The first vanes may be distributed substantially uniformly about a circumference of the central impeller hub. The first radial distance may be greater than the second radial distance. At least one second vane may be located between each pair of adjacent first vanes.

The plurality of vanes may further comprise a third impeller vane. A third radial distance between the radially outer surface of the central impeller hub

and a radially outer edge of the third impeller vane may be different to the first radial distance and the second radial distance.

The plurality of impeller vanes may further comprise at least one other impeller vane. For each other impeller vane, a respective radial distance between the radially outer surface of the central impeller hub and a radially outer edge of that other impeller vane may be different to the first radial distance, the second radial distance, and each other respective radial distance. The first vane, the second vane, and the at least one other vane may be positioned adjacent to one another in order of decreasing size or increasing size.

The second radial distance may be between 25% and 75% of the first radial distance. Each of the plurality of impeller vanes may be a curved vane. The central impeller hub and the impeller vanes may be integrally formed.

At least a part of the central impeller hub may be substantially frustoconical in shape. The first radial distance may vary along a length of the substantially frustoconical-shaped at least a part of the central impeller hub such that a radial distance between the radially outer edge of the first impeller vane and an axis of rotation of the impeller is substantially constant along the length of the substantially frustoconical-shaped at least a part of the central impeller hub. The second radial distance may vary along the length of the substantially frustoconical-shaped at least a part of the central impeller hub such that a radial distance between the radially outer edge of the second impeller vane and the axis of rotation of the impeller is substantially constant along the length of the substantially frustoconical-shaped at least a part of the central impeller hub.

A cross section of the impeller may have rotational and/or reflectional symmetry. The cross section may be perpendicular to a longitudinal axis of the impeller.

The liquid-ring vacuum pump may be a two-stage liquid-ring vacuum pump. Each of the two stages may have a different respective vane configuration. The motor may be an alternating current (AC) motor.

In a further aspect, the present invention provides an impeller for a liquid ring pump. The impeller comprises a central impeller hub, and a plurality of impeller vanes extending outwards from the central impeller hub, the plurality of impeller vanes extending along at least part of an axial length of the central impeller hub. The plurality of vanes comprises a first impeller vane and a second impeller vane. A first radial distance between a radially outer surface of the central impeller hub and a radially outer edge of the first impeller vane is different to a second radial distance between the radially outer surface of the central impeller hub and a radially outer edge of the second impeller vane.

The plurality of impeller vanes may comprise a first plurality of first impeller vanes, wherein for each first impeller vane, a radial distance between the radially outer surface of the central impeller hub and a radially outer edge of that first impeller vane is substantially equal to the first radial distance. The plurality of impeller vanes may comprise a second plurality of second impeller vanes, wherein for each second impeller vane, a radial distance between the radially outer surface of the central impeller hub and a radially outer edge of that second impeller vane is substantially equal to the second radial distance. The first radial distance may be greater than the second radial distance. The first vanes may be distributed substantially uniformly about a circumference of the central impeller hub. The first radial distance may be greater than the second radial distance. At least one second vane may be located between each pair of adjacent first vanes.

The plurality of impeller vanes may further comprise at least one other impeller vane. For each other impeller vane, a respective radial distance between the radially outer surface of the central impeller hub and a radially outer edge of that other impeller vane may be different to the first radial distance, the second radial distance, and/or each other respective radial distance. The first vane, the second vane, and the at least one other vane may be positioned adjacent to one another in order of decreasing size or increasing size.

The second radial distance may be between 10% and 90% of the first radial distance. The second radial distance may be between 25% and 75% of the first radial distance.

Each of the plurality of impeller vanes may either substantially perpendicular or oblique to the radially outer surface of the central impeller hub from which it extends. Each of the plurality of impeller vanes may be a curved vane. The central impeller hub and the impeller vanes may be integrally formed.

The central impeller hub may be substantially cylindrical or substantially frustoconical. A cross section of the impeller may have rotational and/or reflectional symmetry, the cross section being perpendicular to a longitudinal axis of the impeller.

In a further aspect, the present invention provides a liquid-ring pump comprising a pump housing, and an impeller mounted eccentrically in the pump housing, the impeller being in accordance with any preceding aspect.

The liquid-ring vacuum pump may be a two-stage liquid-ring vacuum pump. Each stage may have a different vane configuration. For example, a first stage may comprise vanes having different lengths to those of a second stage. The first stage may comprise a different number of vanes to the second stage. The first stage may comprise vanes having a different shape to those of the second stage.

In a further aspect, the present invention provides an impeller for a liquid ring pump. The impeller comprises a central impeller hub, and a plurality of impeller vanes extending outwards from the central impeller hub, the plurality of impeller vanes extending along at least part of an axial length of the central impeller hub. The plurality of impeller vanes comprises: a first impeller vane having a first size in a direction radially outwards from the axis of rotation (this would avoid workarounds on the hub definition) to a tip of the first impeller vane; and a second impeller vane having a second size in a direction radially outwards from the axis of rotation to a tip of the second impeller vane; and the first size is different to the second size.

In a further aspect, the present invention provides an impeller for a liquid ring pump. The impeller comprises a central impeller hub, and a plurality of impeller vanes extending outwards from the central impeller hub, the plurality of impeller vanes extending along at least part of an axial length of the central impeller hub. The plurality of impeller vanes comprises: a first impeller vane having a first size in a direction radially outwards from the central impeller hub to a tip of the first impeller vane; and a second impeller vane having a second size in a direction radially outwards from the central impeller hub to a tip of the second impeller vane; and the first size is different to the second size.

In a further aspect, the present invention provides a liquid-ring pump comprising a housing with a chamber therein, and an impeller mounted eccentrically in the chamber. The impeller comprises a central impeller hub and a plurality of impeller vanes extending outwards from the central impeller hub. At least one of the impeller vanes has a different size in the radial direction to at least one other impeller vane. A size or length of an impeller vane may be defined as a distance from the longitudinal axis of the impeller (i.e. the axis of rotation) to the vane tip, measured perpendicular to the longitudinal axis of the impeller. A size or length of an impeller vane may be defined as a distance from the central hub of the impeller to the vane tip, measured perpendicular to the surface of the central hub. Impeller vanes may extend outwards from the impeller hub, i.e. the vane may extend in a direction that has a vector component in a radial direction, i.e. a direction perpendicular to the longitudinal axis of the impeller.

BRIEF DESCRIPTION OF THE DRAWINGS

The description herein makes reference to the accompanying drawings described below, wherein like reference numerals refer to like elements.

Figure 1 is a schematic illustration (not to scale) showing a front-view cross section of a conventional single-stage liquid ring pump;

Figure 2 is a schematic illustration (not to scale) showing a front-view cross section of a portion of a first liquid ring pump;

Figure 3 is a schematic illustration (not to scale) showing a front-view cross section of a portion of a second liquid ring pump;

Figure 4 is a schematic illustration (not to scale) showing a front-view cross section of a portion of a third liquid ring pump; and

Figure 5 is a schematic illustration (not to scale) showing a pumping system.

DETAILED DESCRIPTION

It will be appreciated that relative terms such as horizontal and vertical, top and bottom, above and below, front and back, and so on, are used herein merely for ease of reference to the Figures, and these terms are not limiting as such, and any two differing directions or positions and so on may be implemented rather than truly horizontal and vertical, top and bottom, and so on.

Figure 2 is a schematic illustration (not to scale) showing a front-view cross section of a portion of a first embodiment of a liquid ring pump 200.

The liquid ring pump 200 comprises a pump housing 102 with a chamber 104 therein, a shaft 106 extending into the chamber 104, an inlet gas opening 118, and an outlet gas opening 124 arranged as described in more detail earlier above with reference to Figure 1. The liquid ring pump 200 further comprises inlet and outlet ducts coupled to the inlet and outlet openings 118, 124 respectively, arranged as described in more detail earlier above with reference to Figure 1. The inlet and outlet ducts are not shown in Figure 2 for ease of depiction.

In this embodiment, the liquid ring pump 200 further comprises an impeller, hereinafter referred to as the “first impeller” and indicated by the reference numeral 202. The first impeller 202 may be made of any appropriate material. Example material include, but are not limited to, cast iron, cast iron with about 2% nickel, SG iron, stainless steel, aluminium bronze, and duplex stainless steel.

The first impeller 202 comprises a central hub 204 mounted to the shaft 106. The central hub 204 may be fixedly mounted to or combined with the shaft 106. The central hub 204 may be substantially cylindrical in shape. The central hub 204 has a longitudinal axis 210.

The first impeller 202 further comprises a plurality of first vanes 206 and a plurality of second vanes 208. Although Figure 2 shows eight first vanes 206 and eight second vanes 208, it will be appreciated by the skilled person that the first impeller 202 may comprise a different number of first vanes 206 and/or a different number of second vanes 208. For example, the first impeller 202 may comprise between ten and fifteen first vanes 206 and between ten and fifteen second vanes 208.

In this embodiment, when viewed from the front, as in Figure 2, the first impeller 202 has both reflectional and rotational symmetry about its axis 210.

In this embodiment, the first vanes 206 are distributed substantially uniformly about the circumference of the central impeller hub 204.

In this embodiment, the first vanes 206 extend radially outwards from the central hub 204. The central hub 204 and the plurality of first vanes 206 may be integrally formed. In this embodiment, the first vanes 206 are substantially flat vanes, i.e. the first vanes 206 have substantially no curvature with respect to the radial direction.

In this embodiment, a proximal end (or root) of each of the first vanes 206 is integrally formed with the central hub 204, and a distal end (or vane tip or edge) of each of the first vanes 206 is located radially outwards of the central hub 204.

In this embodiment, each of the first vanes 206 extends radially outwards from the central hub 204 substantially perpendicularly to the radially outer surface of the central hub 204.

In this embodiment, each of the first vanes 206 extends from a radially outer surface of the central hub 204 to a first locus 212. The vane tip or edge of each of the first vanes 206 is located at the first locus 212. When viewed from

the front as in Figure 2, the first locus 212 may define a circle centred about the central axis 210. In this embodiment, the first locus 212 is located at a first distance d_1 from the radially outer surface of the central hub 204. In other words, in this embodiment, each of the first vanes 206 has a size in a direction radially outwards from the central impeller hub to a tip of that first vane (i.e. a length between its distal and proximal ends) equal to the first distance d_1. In this embodiment, in the orientation of Figure 2, the first locus 212 may be close to an internal wall of the housing 102 e.g. at the top of the housing 102.

In this embodiment, each of the second vanes 208 extends radially outwards from the central hub 204 substantially perpendicularly to the radially outer surface of the central hub 204.

In this embodiment, the second vanes 208 extend radially outwards from the central hub 204. The central hub 204 and the plurality of second vanes 208 may be integrally formed. In this embodiment, the second vanes 208 are substantially flat vanes, i.e. the second vanes 208 have substantially no curvature with respect to the radial direction.

In this embodiment, a proximal end (or root) of each of the second vanes 208 is integrally formed with the central hub 204, and a distal end (or vane tip or edge) of each of the second vanes 208 is located radially outwards of the central hub 204.

In this embodiment, each of the second vanes 208 extends from a radially outer surface of the central hub 204 to a second locus 214. The vane tip or edge of each of the second vanes 208 is located at the second locus 214. When viewed from the front as in Figure 2, the second locus 214 may define a circle centred about the central axis 210. In this embodiment, the second locus 214 is located at a second distance d_2 from the radially outer surface of the central hub 204. In other words, in this embodiment, each of the second vanes 208 has a size in a direction radially outwards from the central impeller hub to a tip of that second vane (i.e. a length between its distal and proximal ends) equal to the second distance d_2.

In this embodiment, the second distance d_2 is less than the first distance d_1. Thus, the first and second loci 212, 214 define concentric circles about the central axis 210, with the second locus 214 being inside the first locus 212.

Preferably, the second distance d_2 is between 10% and 90% of the first distance d_1. For example, d_2 may be between 20% and 80% of d_1; d_2 may be between 25% and 75% of d_1; or d_2 may be between 50% and 75% of d_1. In some embodiments, d_2 may be between 10% and 20% of d_1; or d_2 may be between 20% and 30% of d_1; or d_2 may be between 30% and 40% of d_1; or d_2 may be between 40% and 50% of d_1; or d_2 may be between 50% and 60% of d_1; or d_2 may be between 60% and 70% of d_1; or d_2 may be between 70% and 80% of d_1; or d_2 may be between 80% and 90% of d_1. In some embodiments, d_2 may be equal to about 10% of d_1, or about 20% of d_1, or about 30% of d_1, or about 40% of d_1, or about 50% of d_1, or about 60% of d_1, or about 70% of d_1, or about 80% of d_1, or about 90% of d_1.

In this embodiment, the first vanes 206 and the second vanes 208 alternate about the circumference of the central hub 204. In other words, only a single second vane 208 is located between each pair of adjacent first vanes 206. Similarly, only a single first vane 206 is located between each pair of adjacent first vanes 208.

In this embodiment, the first and second vanes 206, 208 extend along the axial length of the central hub 204, i.e. in the direction of the axis 210. The first vanes 206 may extend along the entire axial length of the central hub 204. The second vanes 208 may extend along the entire axial length of the central hub 204. The first and second vanes 206, 208 may have the same axial lengths as each other. The first and second vanes 206, 208 may extend along the same axial portion of the central hub 204. In other words, the first and second vanes 206, 208 may overlap (e.g. wholly overlap with each other) in the axial direction.

In operation, the chamber 104 is partially filled with the operating liquid 114. The drive system coupled to the shaft 106 is operated to rotate the shaft 106 so as to rotate the first impeller 202. The rotation of the first impeller 202 is indicated in Figure 2 by an arrow. The rotation of the first impeller 202

centrifugally pushes the operating liquid 114 against an inner wall of the chamber 104, thereby causing a liquid ring to be formed against the inner wall of the chamber 104. The liquid ring provides a seal that may isolate individual gas volumes between adjacent vanes 206, 208 of the first impeller 202 which are used to move and compress gas in the chamber 104.

In operation, forces acting on the liquid ring are due to the pressure differential across adjacent gas volumes between adjacent vanes 206, 208, which tends to act to 'collapse' the liquid ring, and the centrifugal action of the first impeller 202 on the operating liquid 114 which acts to 'suspend' the liquid ring. Other forces acting on the liquid ring, such as gravity, tend to be small in comparison to the aforementioned pressure differential and centrifugal effects.

Conventionally, when designing a liquid ring pump or liquid ring pump impeller, the impeller frequency and number of vanes are defined such that sufficient centrifugal force is produced to suspend the liquid ring against the internal wall of the housing, even when acting against the pressure differentials between adjacent volumes created inside the pump. If the frequency and/or number of vanes is too low, the liquid ring may collapse towards the impeller hub due to the pressure differentials in the pump. This tends to prevent correct operation of the pump. Conversely, if the frequency and/or number of vanes is high, the power consumption due to parasitic losses in the pump tends to be large. High parasitic losses tend to be due to drag and shear effects between the liquid, rotating and static components with a significant contribution from the high surface area of the impeller vanes.

With reference to Figure 1, conventionally the highest pressure differential between adjacent volumes defined by the impeller vanes 112 tends to occur at or near the top of the chamber 104, between the outlet opening 124 and the inlet opening 118. For example, if the liquid ring pump 100 is exhausting pumped gas to a pressure of about 100kPa (i.e. about 1000mbar) and operating with an inlet pressure of about 10kPa (i.e. about 100mbar), then the pressure differential acting to collapse the liquid ring in the region near the top of the chamber 104 between the outlet opening 124 and the inlet opening 118 may be approximately 90kPa (i.e. about 900mbar). This large pressure

differential between adjacent volumes near the inlet and outlet openings 118, 124 may be counteracted by using a high number of vanes 112 and impeller frequency to provide adequate centrifugal force in the liquid to keep the liquid ring established. Over the remainder of the housing circumference, i.e. in regions away from the top of the pump 100, the pressure differential between adjacent volumes defined by the impeller vanes 112 acting to collapse the liquid ring tends to be much lower than at the top of the pump 100. As such, it tends to be possible to establish the liquid ring in these areas using a lower number of vanes than the number required to establish the liquid ring at the top of the pump 100. However, the vanes 112 continue to create parasitic losses throughout all points of rotation due to the vanes 112 moving through the operating fluid 114.

Advantageously, the use of the impellers described herein tends to provide sufficient centrifugal force on the operating liquid 114 to establish the liquid ring, while reducing losses due to drag and shear effects. This tends to result from the use of the combination of the relatively longer first vanes 206 and the relatively shorter second vanes 208. In particular, turning back to Figure 2, at the top of the pump 200 where the pressure differential between adjacent volumes defined by the impeller vanes 206, 208 tends to be highest (i.e. between the outlet opening 124 and the inlet opening 118), a high proportion of the vane surface (i.e. of the first and second vanes 206, 208) tends to be in contact with the operating fluid 114. Thus, sufficient centrifugal force tends to be produced by the vanes 206, 208 to suspend the liquid ring against the internal wall of the housing 102. As the first impeller 202 rotates, the second vanes 208 are moved out of contact with the liquid ring in regions of the pump 200 away from the top of the pump 200, leaving only the first vanes 206 partially in contact with the liquid ring. In such regions, where the pressure differential between adjacent volume tends to be lower, the first vanes 206 tend to impart sufficient centrifugal force on the operating liquid 114 to establish the liquid ring. Also, since the second vanes 208 are not moved through the operating liquid 144 in these regions away from the top of the pump 200, losses due to drag and shear effects tend to be reduced.

Conventional liquid ring pumps tend to have relatively high parasitic power losses caused by the viscous shear between the liquid ring and the impeller and housing or stator components. Shear effects tend to occur both in a circumferential direction (resulting from, for example, operating fluid moving around the chamber wall) and in a radial direction (resulting from, for example, operating fluid moving in and out of the volumes between the vanes). The liquid ring pumps and impellers described herein tend to reduce such power losses.

Furthermore, conventional liquid ring pumps tend to have relatively narrow operating frequency ranges due to the constraints of balancing power consumption and centrifugal force limiting the possibilities for low frequency energy saving modes and high frequency performance boosting modes. More specifically, conventionally the impeller tends to need to rotate at a frequency which is high enough to deliver the centrifugal force required to suspend the annular liquid ring against the associated pressure differentials in the pump, and also at a speed slow enough to avoid excessive power consumption as a result of parasitic power losses. This often results in a relatively narrow operating frequency range restricting the performance and energy envelope of the pump. Advantageously, the liquid ring pumps and impellers described herein offer the opportunity for designs which may provide wider operating frequency ranges, thus providing additional options for low frequency energy saving modes and high frequency performance boosting modes. Advantageously, it tends to be possible to operate at a lower minimum speed without collapsing the annular liquid ring. Advantageously, a higher maximum speed and thus pumping capacity tends to be achievable for a given power consumption. Advantageously, the liquid ring pumps described herein tend to be more capable of running at lower speed and/or frequency, i.e. in an “idle mode”, compared to conventional liquid ring pumps. Failures resulting from continually stopping and starting the liquid ring pump thus tends to be reduced. Lifetime of the liquid ring pump tends to be increased.

The impellers and liquid ring pumps described herein tend to enable a lower power consumption and/or a wider operating frequency range. For example, compared to conventional pumps, the liquid ring pumps described

herein tend to be operable at a wider frequency range for a given level of power consumption. Also, compared to conventional pumps, the liquid ring pumps described herein tend to achieve lower power consumption for a given frequency of operation.

Advantageously, the liquid ring pumps and impellers described herein may also provide for reduced gas leakage in regions at or proximate to the ends of the impeller which may also provide additional performance in the form of a higher compression ratio and reduced energy due to gas leakage.

Advantageously, the liquid ring pumps and impellers described herein tends to be simple, low-cost, and robust.

The impellers described herein tend to have lower manufacturing costs, e.g. in terms of manufacturing time and material, compared to conventional impellers. For example, the impellers described herein, such as those shown in Figures 2-4, tend to have fewer “full size” vanes (i.e. vanes with sizes in the radial direction of d_1) compared to conventional impellers. “Full size” vanes are typically associated with tight tolerances which may require machining so as to ensure proper clearance between the vane tips/edges and the housing inner wall. Thus, the impellers described herein may reduce the machining tolerances or even eliminate the need for machining of the shorter vanes 208 and so tend to provide for a reduction in the time-consuming measurement and machining processes used to meet such tolerances. Furthermore, the impellers described herein tend to provide a reduced mass and thus material cost compared to conventional impellers. Impellers with lower mass tend to have lower inertia and as such tends to provide for improved dynamic behaviour of the variable speed liquid ring pump.

The impellers described herein, such as those shown in Figures 2-4, may be easily manufactured, for example as follows. Firstly, an initial impeller is produced, the initial impeller comprising the central hub and a plurality of vanes, wherein each of the vanes is a “full size vane”, i.e. having a size in the radial direction of at least d_1. Secondly, a selected plurality of the “full size” vanes is machined so as to shorten the sizes of those vanes in the radial direction, thus

creating a plurality of shorter vanes (e.g. vanes having sizes in the radial direction of d_2). The tips or edges of the "full size" vanes having length equal to at least d_1 may be machined to meet a relevant tolerance.

In the above embodiments, the impeller comprises first and second vanes arranged in an alternating pattern about the circumference of the central impeller hub. However, in other embodiments, the impeller comprises a plurality of first vanes and a plurality of second vanes arranged in a different pattern.

Figure 3 is a schematic illustration (not to scale) showing a front-view cross section of a portion of a further embodiment of a liquid ring pump 300.

In this embodiment, the liquid ring pump 300 comprises an impeller, hereinafter referred to as the "second impeller" and indicated by the reference numeral 302.

The second impeller 302 comprises the central hub 204 mounted to the shaft 106. The second impeller 302 further comprises a plurality of the first vanes 206 and a plurality of the second vanes 208, the vanes 206, 208 being integrally formed with or connected to the central hub 204. Although Figure 3 shows four first vanes 206 and twelve second vanes 208, it will be appreciated by the skilled person that the second impeller 202 may comprise a different number of first vanes 206 and/or a different number of second vanes 208. For example, the second impeller 302 may comprise between eight and fifteen first vanes 206 and between eight and fifty second vanes 208.

In this embodiment, a respective plurality of second vanes 208 is located between each pair of adjacent first vanes 206. Although Figure 3 shows three second vanes 208 located between each pair of adjacent first vanes 206, it will be appreciated by the skilled person that the second impeller 202 may comprise a different number of second vanes 208 located between each pair of adjacent first vanes 206, such as two, or more than three.

In this embodiment, when viewed from the front, as in Figure 3, the second impeller 302 has both reflectional and rotational symmetry about its axis 210.

In the above embodiments, the impeller comprises impeller vanes having two different sizes in the radial direction, namely first vanes having radial dimension d_1 and second vanes having radial dimension d_2. However, in other embodiments, the impeller comprises vanes having more than two different radial sizes, for example, three different sizes of vane, four different sizes of vane, five different sizes of vane, six different sizes of vane, etc.

Figure 4 is a schematic illustration (not to scale) showing a front-view cross section of a portion of a further embodiment of a liquid ring pump 400.

In this embodiment, the liquid ring pump 400 comprises an impeller, hereinafter referred to as the “third impeller” and indicated by the reference numeral 401.

The third impeller 401 comprises the central hub 204 mounted to the shaft 106. The third impeller 401 further comprises a plurality of the first vanes 206, a plurality of the second vanes 208, a plurality of third vanes 402, and a plurality of fourth vanes 404. The vanes 206, 208, 402, 404 are integrally formed with or connected to the central hub 204. Although Figure 3 shows four first vanes 206, four second vanes 208, four third vanes 402, and four fourth vanes 404, it will be appreciated by the skilled person that the third impeller 401 may comprise a different number of first vanes 206 and/or a different number of second vanes 208 and/or a different number of third vanes 402 and/or a different number of fourth vanes 404. For example, the third impeller 401 may comprise between four and fifteen first vanes 206 and between four and fifteen second vanes 208 and between four and fifteen third vanes 402 and between four and fifteen fourth vanes 404.

In this embodiment, when viewed from the front, as in Figure 4, the third impeller 401 has rotational symmetry about its axis 210.

In this embodiment, the first vanes 206 and second vanes 208 are substantially as described in more detail earlier above with reference to Figures 2 and 3.

The third vanes 402 extend radially outwards from the central hub 204 in a direction extending radially outwards from the central axis 210 of the hub 204.

The third vanes 402 extend radially outwards from the central hub 204 substantially perpendicularly to the radially outer surface of the central hub 204. The central hub 204 and the plurality of third vanes 402 may be integrally formed. In this embodiment, the third vanes 402 are substantially flat vanes, i.e. the third vanes 402 have substantially no curvature with respect to the radial direction (although they likely would have curvature in practice).

In this embodiment, a proximal end (or root) of each of the third vanes 402 is integrally formed with the central hub 204, and a distal end (or vane tip or edge) of each of the third vanes 402 is located radially outwards of the central hub 204.

In this embodiment, each of the third vanes 402 extends from a radially outer surface of the central hub 204 to a third locus 406. The vane tip or edge of each of the third vanes 406 is located at the third locus 406. When viewed from the front as in Figure 4, the third locus 406 may define a circle centred about the central axis 210. In this embodiment, the third locus 406 is located at a third distance d_3 from the radially outer surface of the central hub 204. In other words, in this embodiment, each of the third vanes 402 has a size in a direction radially outwards from the central impeller hub to a tip of that third vane (i.e. a length between its distal and proximal ends) equal to the third distance d_3. In this embodiment, the third distance d_3 is less than the second distance d_2.

The fourth vanes 404 extend radially outwards from the central hub 204 in a direction extending radially outwards from the central axis 210 of the hub 204. The fourth vanes 404 extend radially outwards from the central hub 204 substantially perpendicularly to the radially outer surface of the central hub 204. The central hub 204 and the plurality of fourth vanes 404 may be integrally formed. In this embodiment, the fourth vanes 404 are substantially flat vanes, i.e. the fourth vanes 404 have substantially no curvature with respect to the radial direction (although in practice they would likely have curvature).

In this embodiment, a proximal end (or root) of each of the fourth vanes 404 is integrally formed with the central hub 204, and a distal end (or vane tip or

edge) of each of the fourth vanes 404 is located radially outwards of the central hub 204.

In this embodiment, each of the fourth vanes 404 extends from a radially outer surface of the central hub 204 to a fourth locus 408. The vane tip or edge of each of the fourth vanes 408 is located at the fourth locus 408. When viewed from the front as in Figure 4, the fourth locus 408 may define a circle centred about the central axis 210. In this embodiment, the fourth locus 408 is located at a fourth distance d_4 from the radially outer surface of the central hub 204. In other words, in this embodiment, each of the fourth vanes 404 has a size in a direction radially outwards from the central impeller hub to a tip of that fourth vane (i.e. a length between its distal and proximal ends) equal to the fourth distance d_4. In this embodiment, the fourth distance d_4 is less than the third distance d_3.

Thus, the first, second, third, and fourth loci 212, 214, 406, 408 define concentric circles about the central axis 210, with the second locus 214 being inside the first locus 212, the third locus 406 being inside the second locus 212, and the fourth locus 408 being inside the third locus 406.

Preferably, the third distance d_3 is between 10% and 90% of the first distance d_1, and is less than the second distance d_2. For example, d_3 may be between 20% and 80% of d_1; d_3 may be between 25% and 75% of d_1; or d_3 may be between 50% and 75% of d_1. In some embodiments, d_3 may be between 10% and 20% of d_1; or d_3 may be between 20% and 30% of d_1; or d_3 may be between 30% and 40% of d_1; or d_3 may be between 40% and 50% of d_1; or d_3 may be between 50% and 60% of d_1; or d_3 may be between 60% and 70% of d_1; or d_3 may be between 70% and 80% of d_1; or d_3 may be between 80% and 90% of d_1. In some embodiments, d_3 may be equal to about 10% of d_1, or about 20% of d1, or about 30% of d_1, or about 40% of d_1, or about 50% of d_1, or about 60% of d_1, or about 70% of d_1, or about 80% of d_1, or about 90% of d_1.

Preferably, the fourth distance d_4 is between 10% and 90% of the first distance d_1, and is less than the third distance d_3. For example, d_4 may be between 20% and 80% of d_1; d_4 may be between 25% and 75% of d_1; or d_4 may

be between 50% and 75% of d_1. In some embodiments, d_4 may be between 10% and 20% of d_1; or d_4 may be between 20% and 30% of d_1; or d_4 may be between 30% and 40% of d_1; or d_4 may be between 40% and 50% of d_1; or d_4 may be between 50% and 60% of d_1; or d_4 may be between 60% and 70% of d_1; or d_4 may be between 70% and 80% of d_1; or d_4 may be between 80% and 90% of d_1. In some embodiments, d_4 may be equal to about 10% of d_1, or about 20% of d1, or about 30% of d_1, or about 40% of d_1, or about 50% of d_1, or about 60% of d_1, or about 70% of d_1, or about 80% of d_1, or about 90% of d_1.

By way of example, the third impeller 401 is configured such that the second distance d_2 is between 60% and 90% of d_1, the third distance d_3 is between 30% and 60% of d_1, and the fourth distance d_4 is between 10% and 30% of d_1.

As shown in Figure 4, in this embodiment, in the direction of rotation of the third impeller 402, a first vane 206 is followed by a second vane 208 which is followed by a third 402 vane which is followed by a fourth vale 404, which is followed by another first vane 206, and so on. Thus, in the direction of rotation of the third impeller 402, for each repeat pattern of the vanes, the vanes are arranged in decreasing size order. However, in other embodiments, the vanes of a repeat pattern may be arranged differently, for example in increasing size order.

The use of an impeller having three or more (e.g. four, five, six, or more than six) different lengths of vanes advantageously tends to provide the following advantages.

Firstly, at the top of the liquid ring pump 400, where the pressure differential between adjacent volumes defined by the impeller vanes tends to be highest (i.e. between the outlet opening 124 and the inlet opening 118), all of the vanes 206, 208, 402, 404 tend to be in contact with the operating fluid 114, i.e. a high proportion of the total vane surface tends to be in contact with the operating fluid 114. Thus, a relatively large centrifugal force tends to be produced by the vanes 206, 208, 402, 404 to counteract the large pressure

differential in this area and to suspend the liquid ring against the internal wall of the housing 102.

Secondly, at the bottom of the liquid ring pump 400, where the pressure differential between adjacent volumes defined by the impeller vanes tends to be lowest, only a relatively low proportion of the total vane surface tends to be in contact with the operating fluid 114. That is to say, at the bottom of the liquid ring pump 400, not all vanes contact the liquid ring 114 (for example, it may be the case that only the longest vanes, or only the longest and second longest, or only the first to third longest vanes are in contact with the liquid ring 114). Also, those vanes that do contact the liquid ring 114 tend to do so to a lesser extent at the bottom of the pump 400 compared to at the top of the pump 400.

By way of example, in some embodiments, only the first vanes 206 (i.e. the longest vanes) contact the operating liquid 114 at the lowermost portion of the pump 400. Here, a relatively small centrifugal force tends to be produced by the vanes which is sufficient to counteract the small pressure differential between adjacent volumes in this area of the pump 400, and to suspend the liquid ring 114 against the internal wall of the housing 102. Since, in this example, the second, third, fourth vanes 208, 402, 404 are not moved through the operating liquid 114 in this region at the bottom of the pump 400, losses due to drag and shear effects tend to be reduced.

Thirdly, at intermediate positions between the top of the pump 400 and the bottom of the pump 400 (e.g. at the sides of the pump 400), where the pressure differential may take an intermediate value between the its maximum and minimum values, an intermediate proportion of the total vane surface tends to be in contact with the operating fluid 114. For example, it may be that at the sides of the pump 400 the first and second vanes 206, 208 contact the operating liquid 114, while the third and fourth vanes 402, 404 do not contact the operating liquid 114. Here, an intermediate centrifugal force (i.e. a centrifugal force having a size between those imparted at the top and bottom of the pump 400) tends to be produced by the vanes of the impeller 401, which is sufficient to counteract the pressure differential in this area of the pump 400, and to suspend the liquid ring 114 against the internal wall of the housing 102.

Since the shortest vanes 404, 402 are not moved through the operating liquid 114 in these intermediate regions of the pump 400, losses due to drag and shear effects tend to be reduced.

Fourthly, having vanes of three of more different lengths tends to provide for a more gradual transition in the centrifugal force applied to operating fluid 114 between the top of the pump 400 and the bottom of the pump 400 compared to impellers having vanes of only two different sizes. This more gradual transition tends to reduce or limit large steps in the size of the centrifugal force around the circumference of the pump chamber, which may otherwise cause a collapse of the liquid ring. Moreover, having vanes of more than two different lengths and providing a more gradual transition in the centrifugal force applied to the operating fluid 114 surprisingly tends to reduce risk of gas pulsation and/or cavitation, e.g. compared to using impellers having vanes of only two different sizes.

Furthermore, in liquid ring pumps, the longest vanes of the impeller tend to provide the following two functions: (1) suspend the liquid ring by imparted centrifugal force throughout the rotation cycle; and (2) provide sealed gas pockets to deliver the gas from inlet to outlet with minimal wasteful leakage throughout the rotation cycle. Also, the shortest vanes tend to provide function (1), and only at the top of the liquid ring pump where the highest-pressure differential exists. For the majority of the rotation cycle, the shortest vanes are not in contact with the liquid ring and do not provide either function (1) or (2). Keeping the shortest vanes as short as possible while still providing function (1) advantageously tends to minimise power losses. The inclusion of a third length of vane (e.g. vanes having a length that is between that of the longest vanes and the shortest vanes, i.e. medium-length vanes) advantageously tends to provide improved flexibility with regard to the above-mentioned functions (1) and (2). For example, as one option, the medium vanes may be sized to just maintain contact with the water ring at the bottom of the pump with a minimal dip depth. By way of example, the medium-length vanes may be sized so that, for a given speed of rotation and for a given volume of operating liquid 114, less than or equal to a threshold amount of each medium-length vane is in contact

with the operating liquid. This threshold may be, for example, 10%, 9%, 8%, 7%, 6%, 5%, 4%, 3%, 2%, or 1%. In such embodiments, the medium-length vanes tend to provide the sealing of function (2) throughout the rotation cycle, thereby to reduce leakage. Furthermore, function (1) tends to be enhanced in the upper part of the pump where a higher centrifugal tends to be required. Thus, the medium-length vanes tend to improve the sealing and other factors of pump performance including enhancing the provision of centrifugal force at the top of the pump and reducing power use throughout the rest of the rotation cycle. Also, in liquid ring pumps having only two different lengths of vane, the shorter vanes lose contact with the liquid ring at the bottom of the pump. Thus, in this area, the effective sealed gas pockets span the longer vanes either side of the short vanes. The minimum possible separation of inlet and outlet port at the bottom of the pump tends to be driven by this sealed volume width to ensure that the inlet and outlet never occupy the same, single sealed volume. Typically, having a larger port separation means that the pump is less efficient. Having medium-length vanes that are in constant contact with the liquid ring reduces the size of the sealed gas volumes around the liquid ring pump chamber, and thereby enables smaller port separation and improved efficiency.

Use of an impeller having vanes of three of more different lengths tends to provide a more gradual or smoother transition in centrifugal force. This tends to reduce the likelihood of liquid ring collapse, gas pulsation and/or cavitation. Use of an impeller having vanes of three of more different lengths tends to improve the sealing and other factors of pump performance. For example, the high centrifugal loads at the top of the pump tend to be supported, while reduced power throughout the rest of the cycle is also provided. Use of an impeller having vanes of three of more different lengths tends to enable smaller port separation and improved pump efficiency.

In the above embodiments, the central hub is substantially cylindrical in shape. However, in other embodiments, the central hub of the impeller has a different shape, i.e. non-cylindrical. By way of example, at least part of the central hub of the impeller may be substantially frustoconical in shape. For example, the central hub may have the shape that results from attaching

together two conical frustums (e.g. two substantially identical conical frustums) at their bases such that the axes of those frustums are aligned. A diameter of the cross section of the central hub (taken perpendicular to its longitudinal axis) may be larger at a middle portion of the central hub between the ends of the central hub than the diameters of the cross section of the central hub at its ends. The diameter of the cross section of the central hub may taper from the middle of the central hub towards each of the ends of the central hub.

In the above embodiments, the impeller vanes extend along the axial length of the central hub, e.g. along the entire axial length of the central hub. In the above embodiments, the size or length of each of the vanes in the radial direction may be substantially uniform along the axial length of the central hub. However, in other embodiments, the size or length of one or more of the vanes in the radial direction may vary along the axial length of the central hub. For example, in embodiments in which the central hub of the impeller is non-cylindrical, the sizes or lengths of the vanes in the radial direction may vary accordingly along the axial length of the central hub such that the tips or edges of the vanes define one or more cylinders when the impeller is rotated. The sizes or lengths of the vanes in the radial direction may vary along the axial length of the central hub such that, at each point along the axial length of the impeller, for each impeller vane, as the impeller rotates about its axis the tip or distal edge of that vane is swept through the same diameter circular locus of points as each other point along the axial length of the impeller.

In some embodiments, one or more of the impeller vanes extends along only part, i.e. not all, of the axial length of the central hub.

In the above embodiments, the first vanes are distributed substantially uniformly about the circumference of the central impeller hub. However, in other embodiments, the first vanes are not distributed uniformly about the circumference of the central impeller hub.

In the above embodiments, the vanes of the impeller are substantially flat vanes, i.e. have substantially no curvature with respect to the radial direction. However, in other embodiments, one or more of the vanes has a different

shape. For example, in some embodiments, one or more of the vanes is curved, for example, with respect to the radial direction. Other appropriate shapes for the vanes include, but are limited, vanes having tapered cross sections, and vanes having aerofoil-shape cross sections.

In the above embodiments, the impeller vanes extend radially outwards from the central hub substantially perpendicularly to the radially outer surface of the central hub. However, in other embodiments, one or more of the vanes is not perpendicular to the radially outer surface of the central hub. For example, in some embodiments, one or more (e.g. all) of the vanes extend outwards from the central hub obliquely to the radially outer surface of the central hub, e.g. as illustrated in Figure 1. In some embodiments, the vanes extend outwards from the central hub in a direction that has a vector component that is radial and a vector component that in tangential with respect to the surface of the hub.

In the above embodiments, the cross section of the impeller has reflectional and/or rotational symmetry. However, in other embodiments, the cross section of the impeller does not have reflectional and/or rotational symmetry.

In the above embodiments, the impeller central hub and the vanes are integrally formed. For example, the impeller central hub and the vanes may be formed by casting or extrusion. However, in other embodiments, one or more of the vanes is not integrally formed with the central hub. A vane may be attached to the central hub in any appropriate way including but not limited to welding or brazing.

In the above embodiments, the liquid ring pump is a single-stage liquid ring pump. However, in other embodiments, the liquid ring pump is a different type of liquid ring pump, for example a multi-stage liquid ring pump. One or more of the stages may have a different vane configuration (e.g. size of vanes, shape of vanes, number of vanes, etc.) to one or more of the other stages.

Figure 5 is a schematic illustration (not to scale) showing an embodiment of a pumping system 500. In practice, the pumping system 500 may be coupled to a facility (not shown) such that, in operation, the pumping system 500

establishes a vacuum or low-pressure environment at the facility by drawing gas (for example, air or a process gas) from the facility.

The pumping system 500 comprises a liquid ring pump 502, a motor 504, and a controller 506.

The liquid ring pump 502 is a liquid ring pump according to any of the above described amendments. In some embodiments, the liquid ring pump 502 is as described above with reference to Figure 2. In other embodiments, the liquid ring pump 502 is as described above with reference to Figure 3. In still other embodiments, the liquid ring pump 502 is as described above with reference to Figure 4.

In this embodiment, the motor 504 is connected to and configured to drive the liquid ring pump 500. More specifically, in operation, the motor 504 rotates the shaft 106 of the liquid ring pump 500, thereby rotating the impeller 108 within the chamber 104. In this embodiment, the motor is an AC motor.

The controller 506 comprises a variable speed drive (VSD) 508. The VSD 508 is coupled to and configured to control the speed of the motor 504. As the motor 504 is an AC motor in this embodiment, the VSD may be referred to a variable frequency drive (VFD), an inverter, or a frequency inverter. Nevertheless, in other embodiments, the motor 504 may be a DC motor.

Use of a liquid ring pump having an impeller that comprises two or more different lengths of vanes tends to be particularly beneficial when operated using a VSD.

When used with a VSD, an impeller that comprises two or more different lengths of vanes may provide for stable operating at lower frequencies (at which less energy is consumed). VSD driven liquid ring pumps may be operated in ‘turn-down’ or ‘idle mode’. This is when a VSD driven liquid ring pump is operated at particularly low frequencies, for example when full performance is not required. Operation in such a mode may be a preferential alternative to switching off the liquid ring pump. Also, operation in such a mode may provide a wider range of operating conditions. ‘Turn-down’ or ‘idle mode’ may be enabled by the use of a VSD. Typically, the lower the operating frequency (turn down)

the lower the energy consumed (due to less drag, and less gas being pumped). Liquid ring pumps have a minimum frequency limit at which the liquid ring will collapse due to the reduced centrifugal force from the lower rotor speeds. The use of the impeller having two or more different lengths of vanes extends that turn down frequency to a lower value by providing additional vane surfaces over which the centrifugal force is exerted, and hence provides for a lower energy condition.

When used with a VSD, an impeller that comprises two or more different lengths of vanes may provide for reduced energy consumption at elevated (or boost) frequencies. Fixed frequency liquid ring pumps will operate under a given condition with a specific level of energy/power. In the case of VSD driven liquid ring pump, this is also possible, however, due to the above-mentioned lower energy consumption that may be provided by using an impeller that comprises two or more different lengths of vanes, there is the option to run at higher frequencies and hence higher performance/capacity whilst consuming a similar amount of energy/power to a fixed frequency machine. This provides the design option to either standardise on a higher frequency/performance at the same energy level or to standardise on the same performance at a lower energy level (with the additional option of a transient boost mode).

Reference numeral list:

100 - liquid ring pump;

102 - pump housing;

104 – chamber;

106 – shaft;

108 – impeller;

110 - central hub;

112 – vane;

114 – operating liquid;

115 – direction of rotation;

116 - inlet duct;

118 - inlet opening;

120 - gas flow;

122 - outlet duct;

124 - outlet opening;

126 - gas flow;

200 – liquid ring pump;

202 - first impeller;

204 - central hub;

206 - first vane;

208 - second vane;

210 – axis;

212 – first locus;

214 – second locus;

300 – liquid ring pump;

302 - first impeller;

400 – liquid ring pump;

401 - third impeller;

402 - third vane;

404 - fourth vane;

406 - third locus;

408 - fourth locus;

d_1 – first distance;

d_2 – second distance;

d_3 – third distance;

d_4 – fourth distance;

500 - pumping system;

502 - liquid ring pump;

504 – motor;

506 – controller;

508 – variable speed drive (VSD).

CLAIMS

1. A pumping system comprising:

a liquid ring pump;

a motor configured to drive the liquid ring pump; and

a variable speed drive configured to control the motor; wherein

the liquid ring pump comprises:

a pump housing; and

an impeller mounted eccentrically in the pump housing;

the impeller comprises:

a central impeller hub; and

a plurality of impeller vanes extending outwards from the central impeller hub, the plurality of impeller vanes extending along at least part of an axial length of the central impeller hub;

the plurality of vanes comprises a first impeller vane and a second impeller vane; and

a first radial distance between a radially outer surface of the central impeller hub and a radially outer edge of the first impeller vane is different to a second radial distance between the radially outer surface of the central impeller hub and a radially outer edge of the second impeller vane.

2. The pumping system of claim 1, wherein the plurality of impeller vanes comprises:

a first plurality of first impeller vanes, wherein for each first impeller vane, a radial distance between the radially outer surface of the central impeller hub and a radially outer edge of that first impeller vane is substantially equal to the first radial distance; and

a second plurality of second impeller vanes, wherein for each second impeller vane, a radial distance between the radially outer surface of the central

impeller hub and a radially outer edge of that second impeller vane is substantially equal to the second radial distance.

3. The pumping system of claim 2, wherein the first radial distance is greater than the second radial distance, and the first vanes are distributed substantially uniformly about a circumference of the central impeller hub.

4. The pumping system of any of claims 2 or 3, wherein the first radial distance is greater than the second radial distance, and at least one second vane is located between each pair of adjacent first vanes.

5. The pumping system of any of claims 1 to 4, wherein:

the plurality of vanes further comprises a third impeller vane; and

a third radial distance between the radially outer surface of the central impeller hub and a radially outer edge of the third impeller vane is different to the first radial distance and the second radial distance.

6. The pumping system of any of claims 1 to 5, wherein the plurality of impeller vanes further comprises:

at least one other impeller vane; wherein

for each other impeller vane, a respective radial distance between the radially outer surface of the central impeller hub and a radially outer edge of that other impeller vane is different to the first radial distance, the second radial distance, and each other respective radial distance.

7. The pumping system of claim 6, wherein the first vane, the second vane, and the at least one other vane are positioned adjacent to one another in order of decreasing size or increasing size.

8. The pumping system of any of claims 1 to 7, wherein the second radial distance is between 25% and 75% of the first radial distance.

9. The pumping system of any of claims 1 to 8, wherein each of the plurality of impeller vanes is a curved vane.

10. The pumping system of any of claims 1 to 9, wherein the central impeller hub and the impeller vanes are integrally formed.

11. The pumping system of any of claims 1 to 10, wherein at least a part of the central impeller hub is substantially frustoconical in shape.

12. The pumping system of claim 11, wherein:

the first radial distance varies along a length of the substantially frustoconical-shaped at least a part of the central impeller hub such that a radial distance between the radially outer edge of the first impeller vane and an axis of rotation of the impeller is substantially constant along the length of the substantially frustoconical-shaped at least a part of the central impeller hub; and/or

the second radial distance varies along the length of the substantially frustoconical-shaped at least a part of the central impeller hub such that a radial distance between the radially outer edge of the second impeller vane and the axis of rotation of the impeller is substantially constant along the length of the substantially frustoconical-shaped at least a part of the central impeller hub.

13. The pumping system of any of claims 1 to 12, wherein a cross section of the impeller has rotational and/or reflectional symmetry, the cross section being perpendicular to a longitudinal axis of the impeller.

14. The pumping system of any of claims 1 to 13, wherein:

the liquid-ring vacuum pump is a two-stage liquid-ring vacuum pump; and each of the two stages has a different respective vane configuration.

15. The pumping system of any of claims 1 to 14, wherein the motor is an alternating current, AC, motor.

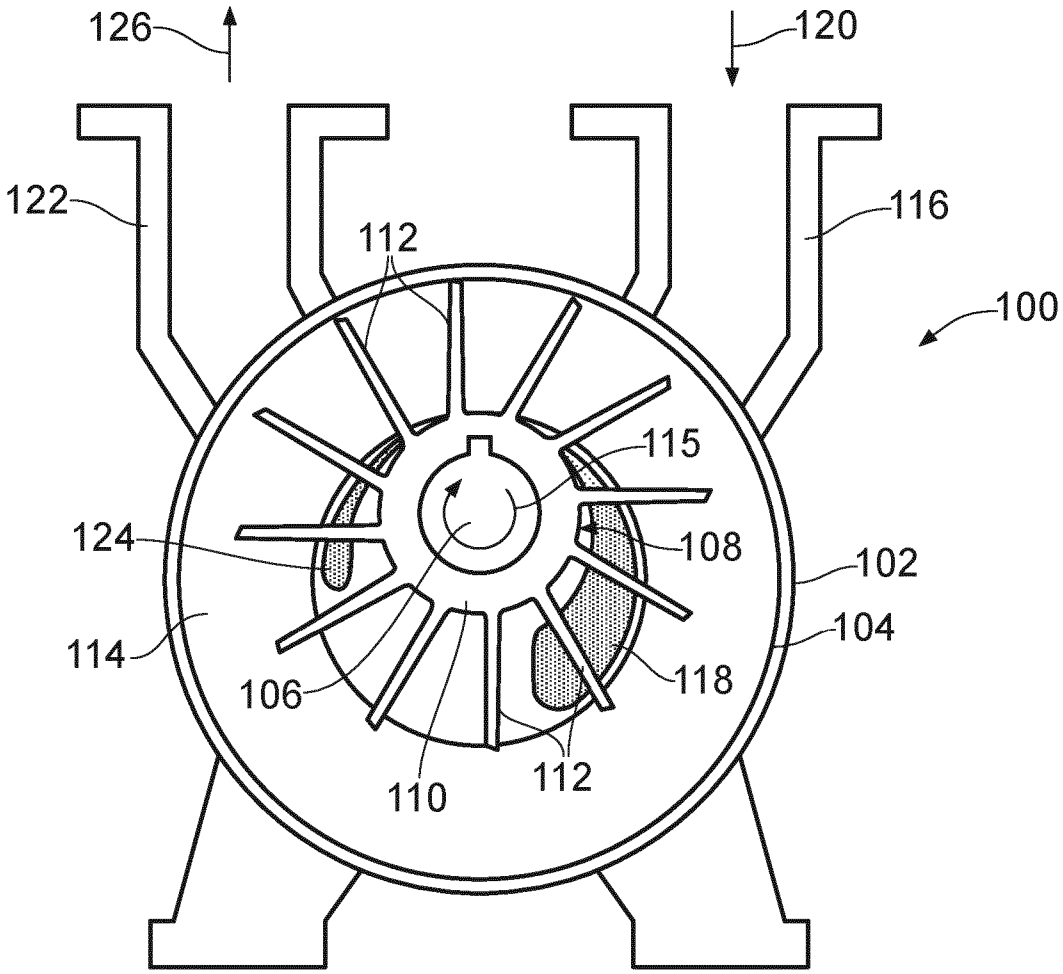

FIG. 1 (Prior Art)

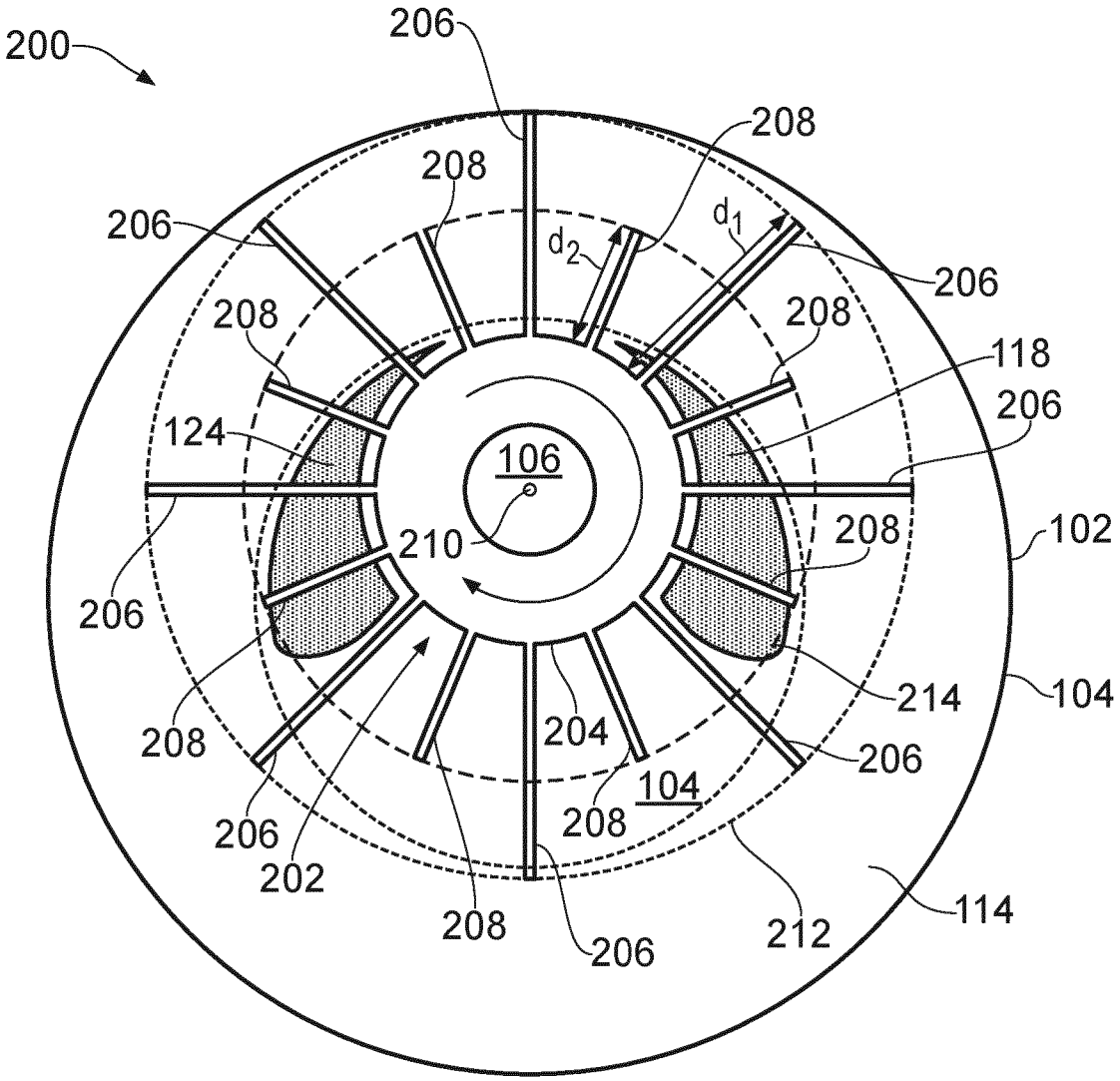
200
206
208
208
206
d_1
d_2
206
208
208
118
206
124
106
210
208
102
206
214
104
208
204
206
104
208
206
202
208
206
212
114

FIG. 2

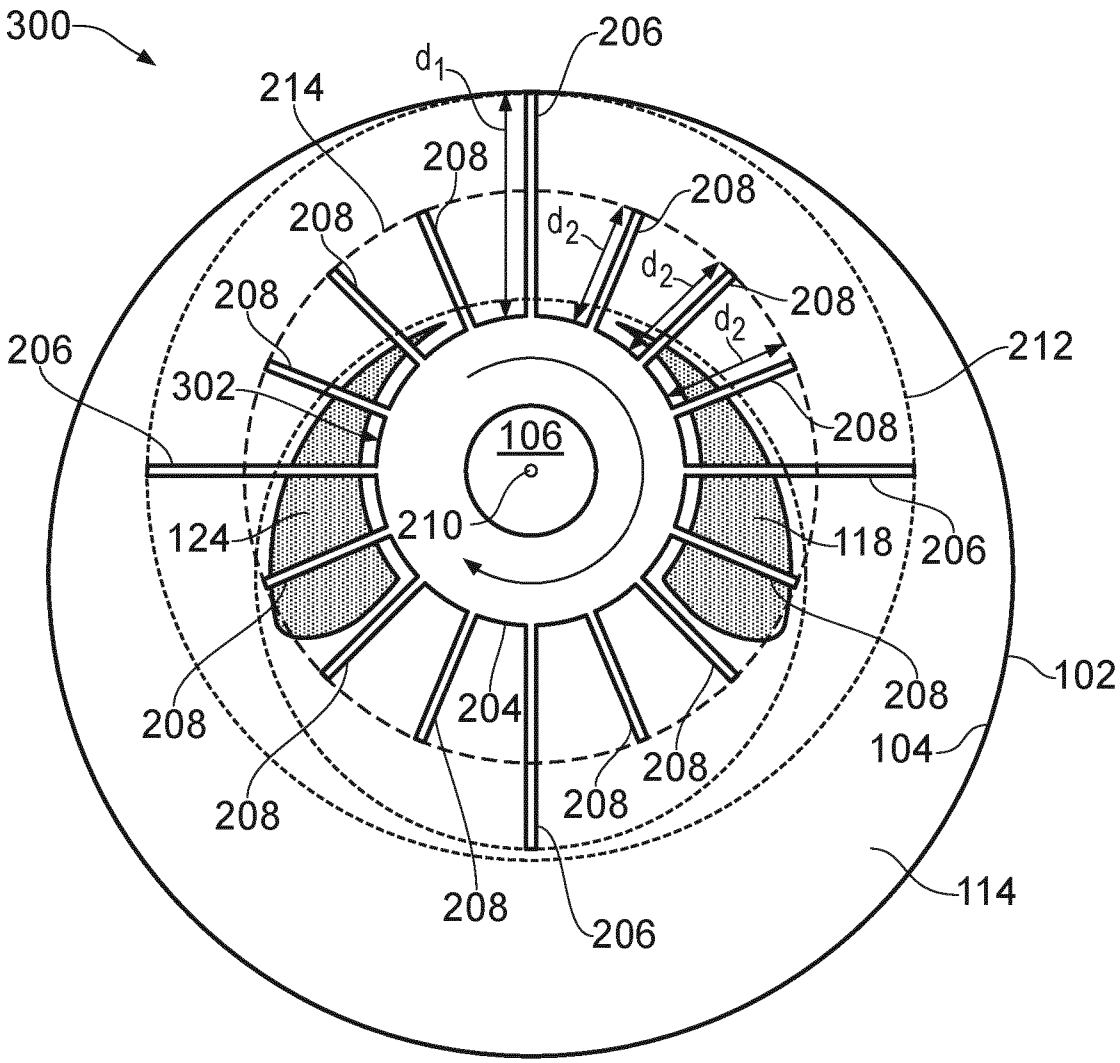
300
206
d_1
214
208
208
208
d_2
d_2
208
208
d_2
206
212
302
208
106
210
124
118
206
208
102
208
204
104
208
208
208
208
114
206

FIG. 3

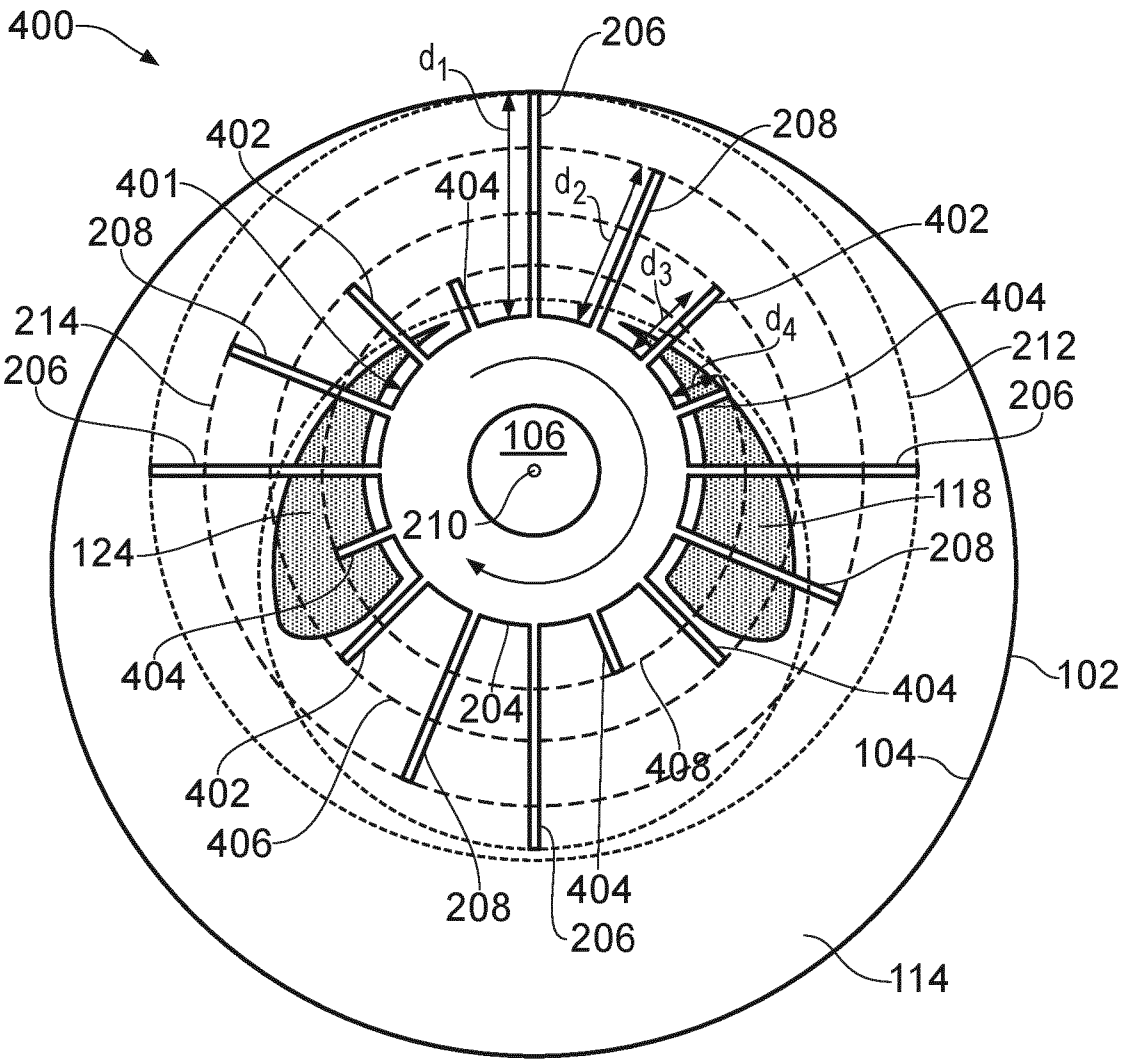
400
206
d_1
208
402
401
404
d_2
208
402
d_3
404
214
d_4
212
206
206
106
118
210
124
208
404
404
102
204
408
104
402
406
208
404
206
114

FIG. 4

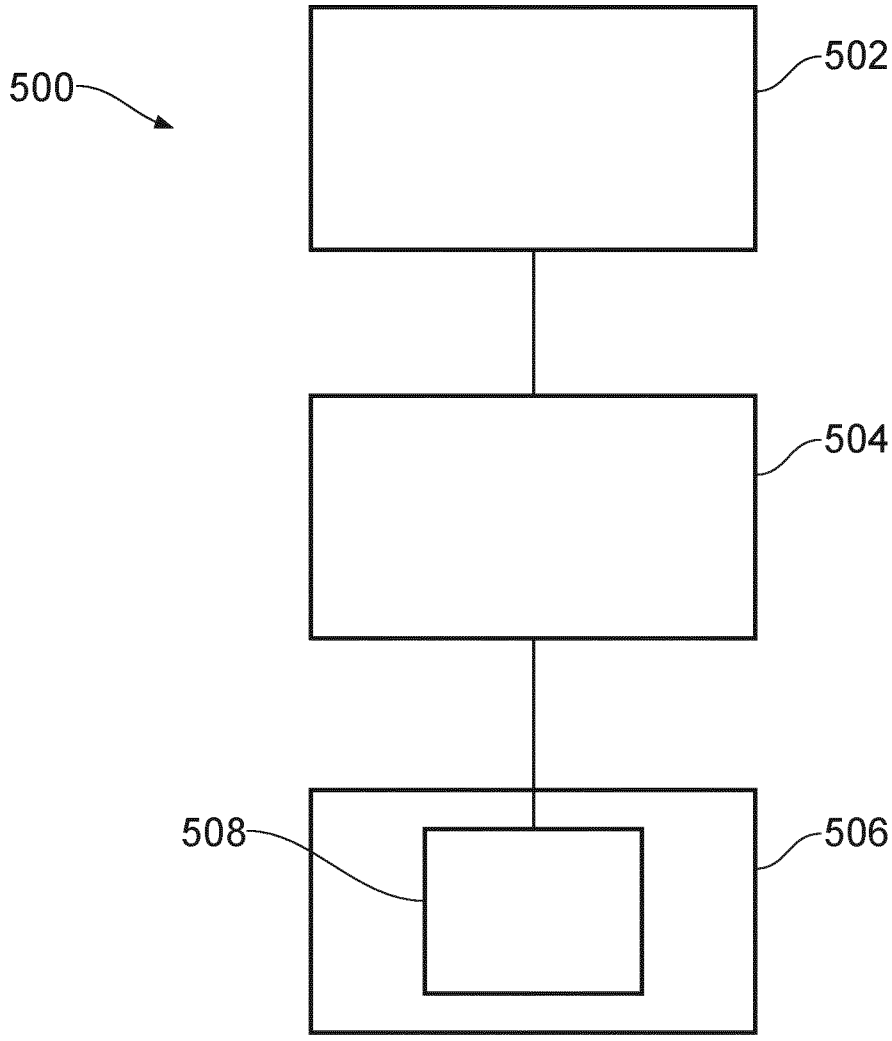

FIG. 5

INTERNATIONAL SEARCH REPORT

International application No
PCT/EP2020/065593

A. CLASSIFICATION OF SUBJECT MATTER
INV. F01C7/00 F04C7/00 F04C19/00
ADD.

According to International Patent Classification (IPC) or to both national classification and IPC

B. FIELDS SEARCHED

Minimum documentation searched (classification system followed by classification symbols)
F01C F04C

Documentation searched other than minimum documentation to the extent that such documents are included in the fields searched

Electronic data base consulted during the international search (name of data base and, where practicable, search terms used)
EPO-Internal, WPI Data

C. DOCUMENTS CONSIDERED TO BE RELEVANT

Category*	Citation of document, with indication, where appropriate, of the relevant passages	Relevant to claim No.
X	JP 2009 156038 A (NAT INST OF ADV IND & TECHNOL) 16 July 2009 (2009-07-16)	1-4, 10-15
A	figure 4	5-9

X	DE 35 40 447 A1 (SIEMENS AG [DE]) 21 May 1987 (1987-05-21)	1-4,8-15
A	figure 1	5-7

A	RU 2 624 309 C2 (FED GOSUDARSTVENNOE BYUDZHETNOE OBRAZOVATELNOE UCHREZHDENIE VYSSHEGO P) 3 July 2017 (2017-07-03) abstract	1

A	DE 19 40 212 A1 (ZWANZIGER WERNER DIPL ING) 18 February 1971 (1971-02-18)	11,12

☐ Further documents are listed in the continuation of Box C.

☒ See patent family annex.

* Special categories of cited documents :

"A" document defining the general state of the art which is not considered to be of particular relevance

"E" earlier application or patent but published on or after the international filing date

"L" document which may throw doubts on priority claim(s) or which is cited to establish the publication date of another citation or other special reason (as specified)

"O" document referring to an oral disclosure, use, exhibition or other means

"P" document published prior to the international filing date but later than the priority date claimed

"T" later document published after the international filing date or priority date and not in conflict with the application but cited to understand the principle or theory underlying the invention

"X" document of particular relevance; the claimed invention cannot be considered novel or cannot be considered to involve an inventive step when the document is taken alone

"Y" document of particular relevance; the claimed invention cannot be considered to involve an inventive step when the document is combined with one or more other such documents, such combination being obvious to a person skilled in the art

"&" document member of the same patent family

Date of the actual completion of the international search	Date of mailing of the international search report
18 August 2020	30/09/2020

Name and mailing address of the ISA/	Authorized officer
European Patent Office, P.B. 5818 Patentlaan 2 NL - 2280 HV Rijswijk Tel. (+31-70) 340-2040, Fax: (+31-70) 340-3016	Grilli, Muzio

1

INTERNATIONAL SEARCH REPORT

Information on patent family members

International application No
PCT/EP2020/065593

Patent document cited in search report	Publication date	Patent family member(s)	Publication date
JP 2009156038 A	16-07-2009	JP 5142263 B2	13-02-2013
		JP 2009156038 A	16-07-2009
DE 3540447 A1	21-05-1987	NONE	
RU 2624309 C2	03-07-2017	NONE	
DE 1940212 A1	18-02-1971	NONE	