Dec. 22, 1964 O. DANYLUKE 3,162,382

CENTRIFUGAL PULVERIZER

Filed March 22, 1962 2 Sheets-Sheet 1

FIG. 1

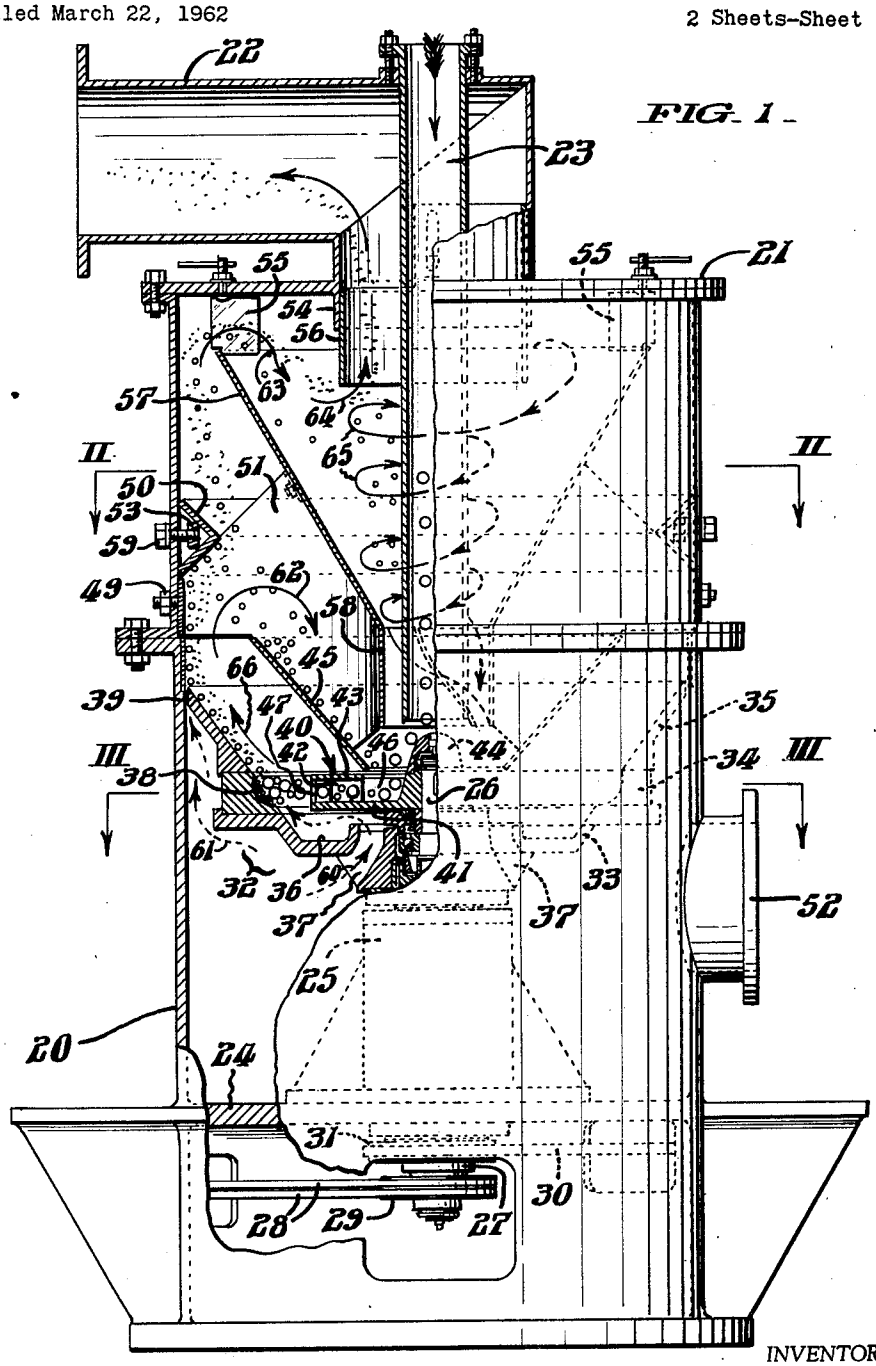

INVENTOR.
Ostap Danyluke,
BY
Paul & Paul
ATTORNEYS.

Dec. 22, 1964 O. DANYLUKE 3,162,382

CENTRIFUGAL PULVERIZER

Filed March 22, 1962 2 Sheets-Sheet 2

FIG. 2.

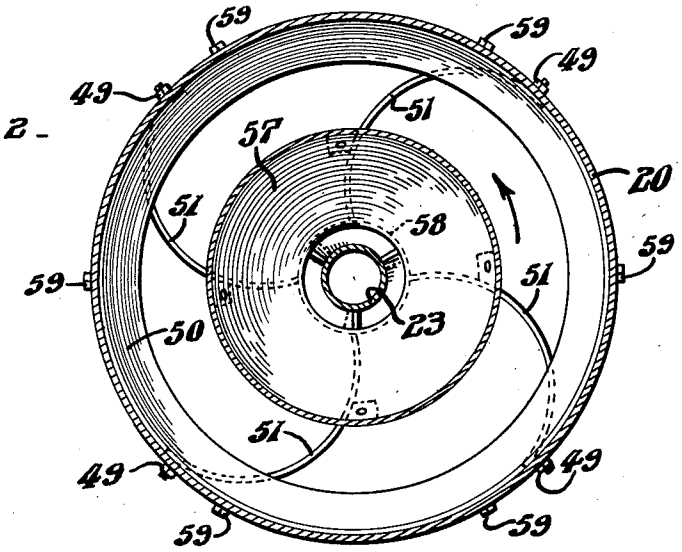

FIG. 3.

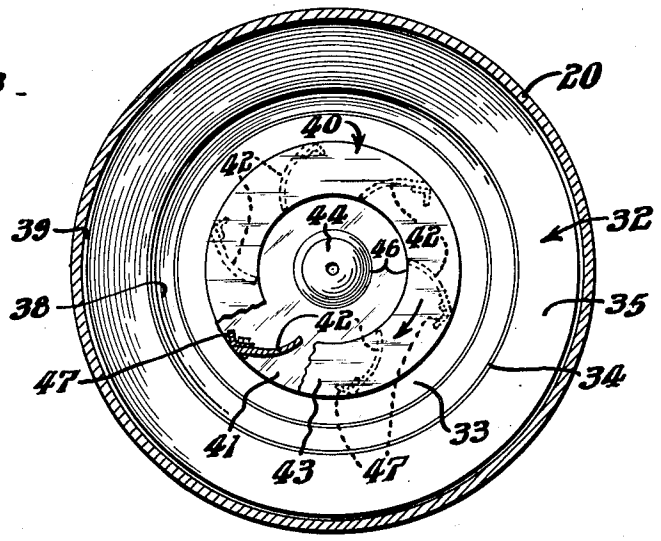

FIG. 4.

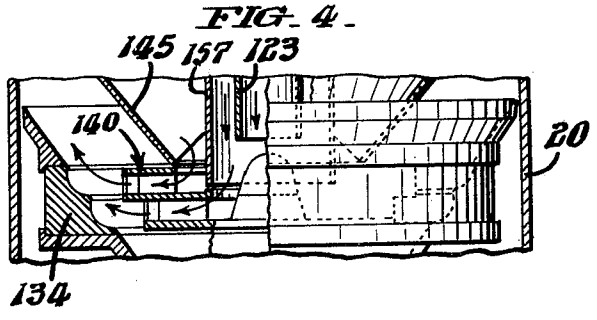

INVENTOR.
Ostap Danyluke,
BY
Paul & Paul
ATTORNEYS.

United States Patent Office

3,162,382

Patented Dec. 22, 1964

3,162,382

CENTRIFUGAL PULVERIZER

Ostap Danyluke, Newtown Square, Pa., assignor to Bath Iron Works Corporation, Bath, Maine, a corporation of Maine

Filed Mar. 22, 1962, Ser. No. 181,552

7 Claims. (Cl. 241—53)

This invention relates to apparatus for pulverizing or reducing to a desired particle size such materials as ore, rock, pigments, clay, and the like.

The object of my present invention is to provide apparatus for pulverizing such materials to a selected controlled size as determined by adjustments readily made to the pulverizing apparatus.

According to my present invention, the size to which the particles of a particular material are pulverized or reduced is controlled by a number of factors, including the following: (1) The velocity of a stream of air or other gas which is forced up through the pulverizer, as by a blower; (2) the angular positions to which a plurality of adjustable classifying vanes are set; (3) the vertical position to which an adjustable classifying sleeve is set; and (4) the rotative speed of the impeller.

In the apparatus of my present invention, the air stream forced up through the housing divides into two paths, one of which is upward through vents in the floor of the bowl and thus upward through the interior of the bowl. The bowl referred to is the rotating bowl against the sides of which the particles to be crushed are thrown centrifugally by the rapidly rotating impeller mounted in the bowl. The other path followed by the forced air stream is up along the exterior wall of the bowl and upward along the interior wall of the housing through a narrow annular opening between the inner wall of the cylindrical housing and the outer upper edge of the bowl. The latter path makes unnecessary the provision of wall scrapers. Both air-stream paths then join, and the combined air streams pass as a unit up through the remainder of the apparatus and out the product collection or discharge duct. The velocity of the air stream, as indicated above, is one of the factors which controls the size of the particles carried out the discharge duct, the greater the velocity, the larger the particle size for a given material.

The radial positions of the adjustable classification vanes control the diameter of a spiraling path followed by the air stream as it moves radially inward from over the upper edge of an upper fixed classification cone toward the entrance of the coaxially disposed discharge duct. The greater the departure of the classification vanes from a radial position, the larger the diameter of the spiral and the smaller the size of the product delivered to the discharge duct.

The adjustable classifying sleeve controls the vertical level of the entrance to the discharge duct, the lower the sleeve position, the more the air stream is forced downward and the finer the product delivered to the discharge duct.

The structure of the centrifugal pulverizer of my present invention, and the manner in which it functions, will become clear from a consideration of the following detailed description of a preferred embodiment selected for illustration in the drawing in which:

FIG. 1 is an elevational view, partly in section, of a centrifugal pulverizer in accordance with my invention;

FIG. 2 is a plan view, in section, along the line II—II of FIG. 1;

FIG. 3 is a plan view, in section, along the line III—III of FIG. 1; and

FIG. 4 is an elevational view, partly in section, showing a modified impeller and bowl.

In describing the preferred embodiment of the invention illustrated in the drawing, specific terminology has been resorted to for the sake of clarity. However, it is not the intention to be limited to the specific terms so selected, and it is to be understood that each specific term includes all technical equivalents which operate in a similar manner to accomplish a similar purpose.

Referring now to FIG. 1, the centrifugal pulverizer there shown is housed in a cylindrical housing 20 having thereon a cap or cover 21 having a central opening for receiving the product collection or discharge duct 22 and also the input or feed tube 23, the vertical portion of duct 22 and the tube 23 being concentric.

Housing 20 is supplied with an interior floor 24 on which is mounted a bearing housing 25 which supports for rotation an impeller drive shaft 26 and a bowl drive spindle 27 which occupy concentric positions on the vertical axis of the cylindrical housing. Shaft 26 and spindle 27 are adapted to be driven independently, either in opposite directions or in the same direction, but at different speeds. In the drawing, it is assumed that impeller 40 and bowl 32 are rotated in opposite directions. In FIG. 1, impeller shaft 26 is shown as driven by motor (not shown) through drive belts 28 and a sheave 29, while bowl spindle 27 is shown as driven by a motor (not shown) through a drive belt 30 and a sheave 31. The bowl 32, which is adapted to be driven rotationally by bowl spindle 27, is shown to be comprised of three sections, a lower section 33, a middle section 34, and an upper section 35. The lower section 33 of bowl 32 comprises a generally circular floor supported by spindle 27 and having a central opening through which the impeller drive shaft 26 passes. In the floor, intermediate its outer portion and the impeller drive shaft 26 is an annular depression or trough 36, the outer wall of which inclines outward upward. Between annular trough 36 and the central hole occupied by the impeller shaft 26 a plurality of vents or openings 37 are provided at spaced intervals along an annular path around the impeller drive shaft 26.

An impactor ring 34 forms the middle section of bowl 32. The inner wall of impactor ring 34 inclines outward upward in line with the outer inclined wall of trough 36 but has a depression therein forming the annular recess 38.

The upper section 35 of bowl 32 also inclines outward upward at an angle of inclination equal to that of the inner wall of impactor ring 34 and that of the outer wall of trough 36. Thus, the lower, middle and upper sections of the bowl 32, when secured together, form a bowl structure whose wall surface rises at a fixed angle of inclination from the floor of the trough 36 to the bowl's upper edge, broken only by the recess 38 in the impactor ring 34. This fixed angle of inclination is preferably 35° from the vertical, as will be discussed.

Mounted within bowl 32 on impeller drive shaft 26 and adapted to be driven rotationally thereby is an impeller 40 having a circular disc floor 41 and generally radial spaced-apart arcuate webs 42, which curve in the direction of rotation of impeller 40, as indicated by the arrow in FIG. 3. These webs 42, which are best seen in FIG. 3, support an annular cover plate 43, leaving a central circular opening into which the dome-like cap 44 of the impeller shaft 26 protrudes, thereby forming an annular opening 46 through which the particles to be crushed pass.

The webs 42 divide the impeller into a plurality of arcuate sectors the peripheral edges of which are open and through which the particles are ejected by the centrifugal force of the rotating impeller. Secured to the outer ends of the webs 42 are removable wear shoes 47. These shoes are located at the points of maximum wear. The curved inward portion of the arcuate webs 42 is sub-

jected to but little wear since this curved portion tends to fill up with particles which tend to remain therein, and these retained particles take the wear.

Secured to the housing wall, as by bolts **49**, are four directional vanes **51** which are generally radially disposed at equally spaced locations around the periphery of the cylindrical housing. These directional vanes **51** are curved or arcuate, the outward curve of the vanes as seen in FIG. 2 being clockwise, which is opposite to the counterclockwise direction of rotation of bowl **32**, as indicated in FIG. 2 by the arrow.

As best seen in FIG. 1, the four spaced-apart directional vanes **51** support a pair of coaxial stationary cones, an upper cone **57** and a lower cone **45**. Lower cone **45** is secured to the lower inclined edge of vanes **51**, as by welding, with its lower circular edge just above the annular opening **46** leading to the impeller **40**. Upper cone **57**, which is shown bolted to the upper inclined edge of directional vane **51**, terminates at its lower end in a depending cylindrical portion **58**, the lower circular edge of which is located above the annular opening **46** leading to the impeller **40**, and also above the lower circular edge of cone **45**.

Secured to the wall of housing **20** just above the place of attachment of directional vanes **51** is a deflector ring **50** having an angled cross-sectional shape. In the crotch of the angle of ring **50** is welded an annular bar or ring **53** and into bar **53** bolts **59** are threaded.

Pivotally secured to cover **21** of housing **20** are a plurality of classification vanes **55** spaced apart along an annular path. In a preferred embodiment there are 18 such classification vanes. These vanes **55** depend from the cover **21** and occupy positions just above the upper edge of upper cone **57**. The radial position of these vanes **55** is adjustable and is one of the factors which control the particle size of the material carried out the discharge conduit **22**.

Secured to flange **54** in cover **21** and adjustable vertically within the vertical portion of discharge conduit **22**, and depending coaxially therefrom, is a classification sleeve **56**, the position of which is another factor in controlling the particle size of the product delivered from the pulverizer.

The feed tube **23** is vertically disposed above and along the axis of the cylindrical housing **20**, extending down into housing **20** coaxially through upper cone **57** to a point above the dome cap **44** and the annular opening **46** to the impeller **40**.

Located at a level below the floor of the bowl **32** in the wall of housing **20** is an air input duct through which air is forced as by a blower not shown.

In operation, the particles of material, such as ore, rock, pigment, clay, etc., which are to be reduced to a preselected desired size, are fed, as from a hopper, into the vertically disposed feed tube **23**, drop down the feed tube **23**, and are diverted by the dome-like cap **44** of the impeller shaft **26** into the annular opening **46** leading to the impeller **40**. These particles, which are represented in FIG. 1 by the relatively large circles, fall onto the floor of the rapidly rotating impeller **40** and are thrown out by centrifugal force toward the recess **38** in the impactor ring **34**. The speed at which the thrown particles leave the impeller is substantially equal to the peripheral speed of the rotating impeller. In a typical case, impeller **40** may be rotated at from 2350 to 3600 r.p.m.

Assuming the machine to have been in operation for at least a short time, particles from previously thrown particles are already in the recess **38** of impactor ring **34**. These particles cling to the recess **38** due to the centrifugal forces established by the bowl's rotation. In a typical case, bowl **32** may be rotated at from 300 to 450 r.p.m.

While any suitable means may be employed for rotating the coaxially mounted impeller **40** and bowl **32**, the impeller **40** is shown in FIG. 1 as being driven by a motor (not shown) through drive belts **28**, sheave **29** and shaft **26**, while the bowl **32** is shown as being driven by a motor (not shown) through a drive belt **30**, sheave **31**, and spindle **27**.

The positional arrangement of bowl **32** relative to impeller **40** is such that recess **38** of impactor ring **34** is on a level with the impeller. Thus, as the impeller revolves at high speed, the particles thrown out are directed toward recess **38** and would strike the wall of the recess were it not for the fact that, in operation, as already indicated, the recess **38** itself is substantially filled with particles of material which cling thereto due to the centrifugal forces set up by the rotation of the bowl. Therefore, the particles thrown out from the impeller strike at high speed the particles which are lodged in the recess **38** causing both the striking and striken particles to be further fractured and broken.

The particles thus broken are still further reduced in size by the force of impact of still other particles thrown out by the rapidly rotating impeller. The force of the later-arriving particles in combination with the centrifugal forces set up by the rotation of the rotating bowl **32** cause the smaller and lighter particles to move upward on the inclined wall of the upper portion **35** of the bowl along a path which curves in the direction of rotation of bowl **32**. Included among the particles which are forced upward are some medium sized particles, represented in FIG. 1 by the relatively small circles. When the upwardly-climbing particles rise above the upper edge of the bowl, they hit the arcuate directional vanes **51** and are re-directed inward toward cone **45** along a curving path counter to that followed by the particles as they climbed upward along the wall of the bowl.

The upward movement of particles along the wall of bowl **32** is aided by a stream of air of controlled velocity which is injected into the housing **20** through the air input duct **52** and which is forced up through the vents or holes **37** in the floor of the bowl **32**, as indicated in FIG. 1 by the dashed-line arrow **60**.

In accordance with my present invention, a portion of the air which is forced into the housing **20** through the air input duct **52** passes upward along the outer surface of the wall of bowl **32** and through the narrow annular opening **39** between the upper outer edge of the rotating bowl and the inner wall of the housing, as indicated by the dashed-line arrow **61**.

Above the upper edge of the rotating bowl **32**, the air from the two paths **60** and **61** just described combine to force the particles upward. Some are too heavy to be carried by the air stream and fall down into the fixed cone **45**, as represented by the arrow **62**. Others are carried upward but strike against the inwardly projecting undersurface of deflector ring **50**, and are deflected back into the cone **45**. Those particles which enter cone **45**, for either of the aforesaid two reasons, are returned through opening **46** to the impeller and pass through another reducing action.

The lighter and some of the intermediate sized particles, even though deflected by ring **50**, are sufficiently light to be carried by the air stream upwardly along a generally spiraling path following the contour of the arcuate vanes **51**. These particles are carried by the air stream inward over the upper edge of the upper cone **57** and past the vanes **55**, as represented by the arrow **63** in FIG. 1. The particles are carried slightly downwardly along a spiral path and then the lighter particles are drawn upward through the vertically adjustable sleeve **56** and outward through the product collection or discharge conduit **22**, as represented by arrow **64**. Some of the heavier of the particles which reach the position represented by arrow **63** are unable to be returned upward by the air stream. These particles return to the impeller along a spiraling downward course within the cone **57**, as represented in FIG. 1 by the arrows **65**.

It was stated earlier in the present specification that,

for a given material, the particle size of the product delivered by the apparatus is a function of a number of factors, one, the velocity of the air stream; two, the position of the classification vanes (55); three, the position of the classification sleeve (56); and four, the rotative speed of the impeller.

The classification role played by the air stream is believed to be apparent. The greater the velocity of the air stream, the larger is the particle size of the product delivered through the discharge conduit 22. The division of the air stream into two paths, one interior of the pulverizing bowl and the other exterior of the bowl, is advantageous in that the exterior stream keeps the wall of the housing above the bowl free and clear of particles which would otherwise tend to cling there under the force of the air stream which sweeps up through the interior of the bowl toward the wall of the housing, as indicated in FIG. 1 by the arrow 66.

The classification vanes 55 control the path of the air stream as it moves inward from over the upper edge of upper cone 57 toward the sleeve 56 and discharge duct 22. Ordinarily, each of the (eighteen) vanes 55 will be set at the same angular position relative to the radial position. The greater the departure of the vanes 55 from the radial position, the greater is the deflection of the air stream, and the larger is the diameter of the spiral path into which the air stream is forced by the vanes within the cone 57. The larger the diameter of the spiral path, the greater the number of the heavier particles which are thrown against or near to the wall of the cone 57 and return downward to the impeller and the fewer the number of particles which are borne by the air stream up through the sleeve 56 and out the product collection duct 22. If the classification vanes 55 are set on the radials, the air stream is not deflected at all into a spiraling path, and the greatest is the number of particles which are carried out the discharge duct 22. In summary, the closer the classification vanes 55 are set to the radial position, the coarser is the product delivered by the pulverizing apparatus.

The vertical or elevational position of the adjustable sleeve 56 also plays a role in the classification process. The lower the position of sleeve 56, the finer is the product delivered out the discharge conduit 22. This results from the fact that the air path to the sleeve entrance from the upper edge of cone 57 involves a downward portion the depth of which increases as the sleeve is lowered. In FIG. 1, sleeve 56 is shown in its lowermost position. Arrow 63 indicates the downward path of the air stream, which may be either a spiral path or not, according to the position of the vanes 55, as previously described. The momentum of the larger particles as they move downward makes it more difficult for the up-sweep of the air stream, when it occurs, as indicated by arrow 64, to carry with it the larger particles, and these continue downward and are returned to the impeller.

The largest or coarsest particle size in the delivered product is dependent on air velocity, but the impeller speed has a decided effect on the number of smaller particles in the product. That is, the top size remains fairly constant (as controlled by air velocity) but as the impeller speed increases, the percentage of the larger particles is reduced, and as the impeller speed is decreased, the percentage of coarse material below top size increases.

In FIG. 1, the restriction to the flow of the air stream up through the interior of the pulverizing bowl 32 may, at first glance, seem to be much less than the restriction offered by the narrow annular opening 39 through which passes the air stream which is exterior of the bowl. I have found, however, that the total air input at duct 52 divides about equally between the two paths. This is because the rapid rotation of the impeller 40 sets up a high pressure area in front of the impactor ring 34 into which the particles of material are thrown. This tends, of course, to impede the flow of the forced air therethrough.

The four arcuate vanes 51 serve the double purpose of supporting cones 57 and 45 and of directing the larger particles of material back to the impeller for further pulverizing. These four vanes 51, together with the air flow forced up through the narrow annular opening 39 make unnecessary the provision of scrapers to clear the housing wall and to return the larger particles to the impeller. The elimination of the need for scrapers is a decided advantage since such scrapers tend to wear fairly rapidly and to require replacement.

It will be seen that in my new pulverizer the particles of material are recirculated until crushed to the size desired, as controlled by the controls described above.

It is important to the movement of particles up the wall of the pulversizing bowl 32 that the wall of the bowl have an inclination of 35° relative to its vertical axis of rotation, i.e., 55° relative to the horizontal axis. I have found that if the wall of the bowl be less steep than 35° from the vertical axis, the particles of material will merely build up on the bowl wall until an angle of 35° (from the vertical axis) is reached before the particles will climb up and beyond the wall. Thus, if the bowl wall is less steep than 35° (from the vertical axis), the production action of the machine following start-up is slowed.

Trough 36 in the floor of the bowl 32 has two functions. When the machine is shut down, trough 36 tends to trap and collect the particles which were in recess 38 and on the wall of the bowl at the time of shut-down. In the absence of trough 36, these particles tended to fall through the vents 37 and to drop to the floor of the machine, necessitating cleaning from time to time. With trough 36, the particles which are caught at time of shut-down are thrown upward by centrifugal force when the machine is again started and brought up to speed.

The other function of trough 36 is to trap and catch the heavier of the initially fed particles which, in the absence of trough 36, tended to drop from the feed chute 23 through the vents 37 all the way down to the floor of the machine.

In FIG. 4, I have illustrated a modification of the apparatus just described. In this modification, the impeller 140 is a double-deck unit. Radial webs (corresponding to webs 42 in FIG. 3) support the upper deck. The impactor ring 134 is provided with two recesses, one opposite each impeller deck. In the arrangement shown in FIG. 4, particles returning to the impeller by way of the lower fixed cone 145 are returned to the upper deck, while particles fed to the impeller from the feed chute 123, or returned to the impeller by way of the upper fixed cone 157, are returned to the lower deck. In other respects, the pulverizing machine of FIG. 4 is similar to that of FIGS. 1–3, described above.

Incidentally, with respect to the curved impeller ribs or webs 42 illustrated in FIG. 3, tests have shown that the particles of material will build up in the outer part of the curved portion of the web until the material forms an angle of $39° \pm 1°$ relative to the radial from the tip of the web. This angle appears to be independent of impeller speed, material, and contour of web.

While the preferred embodiments of this invention have been described in some detail, it will be obvious to one skilled in the art that various modifications may be made without departing from the invention as hereinafter claimed.

Having described my invention, I claim:

1. A centrifugal pulverizer comprising: a cylindrical housing having a cover; a bowl mounted for rotation in said housing, said bowl having an inclined wall having an annular inner recess, the upper edge of said bowl forming with the inner wall of said housing a narrow annular opening, the floor of said bowl having vents therethrough; means for rotating said bowl; an impeller mounted for rotation within said bowl for ejecting particles toward the recess in the wall of said bowl, said im-

peller having a central opening through which particles to be pulverized may be dropped into said impeller; means for rotating said impeller at a speed substantially higher than the rotative speed of said bowl; a plurality of arcuate directional vanes generally radially disposed and secured at spaced-apart circumferential locations to the wall of said housing; a lower stationary cone secured to said directional vanes and supported thereby in an axial position, the lower portion of said cone extending down into said bowl and terminating above said central opening of said impeller; an upper stationary cone secured to said directional vanes and supported by said vanes in an axial position above said lower cone, the lower portion of said upper cone being cylindrical and extending down within said lower cone and terminating above said impeller opening; a feed tube vertically disposed on the axis of said housing and extending down through said cover and down through said upper and lower cones to a point above said impeller opening; a product collection conduit having a portion vertically disposed on the axis of said housing and surrounding said feed tube concentrically at the cover of said housing; a plurality of classification vanes mounted below the cover of said housing at spaced locations along an annular path, said classification vanes occupying positions adjacent the upper edge of said upper cone and being adapted to be adjusted from radial positions to positions forming an acute angle with the radial line; and external means for forcing air into and upwardly through said housing and out said collection conduit, said housing and its fixtures providing two paths for said forced air, one upward through the vents in the floor of said bowl along the inner wall of said bowl and the other upward along the outside of said bowl and through the annular opening between the upper edge of said bowl and the inner wall of said housing, said air paths then combining and passing upward along the outer wall of said upper cone, inward into said upper cone, then upward and out through said product collection conduit, the radial position of said plurality of classification vanes controlling the path of the inward flow of air into said upper cone.

2. Apparatus as claimed in claim 1 characterized in the provision of a vertically adjustable sleeve adapted to extend downward from the housing-cover end of said collection conduit, said sleeve being adapted to provide a downward component to said inward flow of air into said upper cone according to the vertical position of said sleeve.

3. Apparatus as claimed in claim 2 characterized in that the wall of said bowl is inclined at an angle of about 35° from the vertical axis.

4. Apparatus as claimed in claim 3 characterized in that the floor of said bowl is provided with an annular trough.

5. Apparatus as claimed in claim 4 characterized in that said impeller has contiguous upper and lower decks, each having a central opening leading thereinto, the opening to the upper deck being larger.

6. Apparatus as claimed in claim 5 characterized in that said lower cone terminates above the larger opening to said upper deck, and in that the upper cone and feed tube terminate above the smaller opening to said lower deck.

7. A centrifugal pulverizer comprising: a cylindrical housing having a cover; a bowl mounted for rotation in said housing, said bowl having an inclined wall the upper edge of which forms with the inner wall of said housing a narrow annular opening, said bowl wall having an annular inner recess substantially below its upper edge, the floor of said bowl having vents therethrough; means for rotating said bowl; an impeller mounted for rotation within said bowl for ejecting particles toward the recess in the inner wall of said bowl, said impeller having a central opening through which particles to be pulverized may be dropped into said impeller; means for rotating said impeller at a speed substantially higher than the rotative speed of said bowl; a plurality of arcuate directional vanes generally radially disposed and secured at spaced-apart circumferential locations to the wall of said housing; a lower stationary cone supported in an axial position above said impeller opening; an upper stationary cone supported in an axial position above said lower cone; a feed tube vertically disposed on the axis of said housing and extending down through said cover and down through said upper and lower cones to a point above said impeller opening; a product collection conduit having a portion vertically disposed and entering said housing through the cover thereof; a plurality of classification vanes mounted along an annular path and occupying positions adjacent the upper edge of said upper cone and adapted to be adjusted from radial positions to positions forming an angle with the radial line; and external means for forcing air into and upwardly through said housing and out said collection conduit, said housing and its fixtures providing two paths for said forced air, one upward through the vents in the floor of said bowl along the inner wall of said bowl and the other upward along the outside of said bowl and through the annular opening between the upper edge of said bowl and the inner wall of said housing, said air paths then combining and passing upward along the outer wall of said upper cone, inward into said upper cone, then upward and out through said product collection conduit, the radial position of said plurality of classification vanes controlling the path of the inward flow of air into said upper cone.

References Cited in the file of this patent

UNITED STATES PATENTS

3,062,459	Dearing	Nov. 6, 1962

FOREIGN PATENTS

748,813	Great Britain	May 9, 1956
1,148,159	France	Mar. 31, 1959