(12) INTERNATIONAL APPLICATION PUBLISHED UNDER THE PATENT COOPERATION TREATY (PCT)

(19) World Intellectual Property Organization
International Bureau

(43) International Publication Date
06 August 2020 (06.08.2020)

WIPO | PCT

(10) International Publication Number
WO 2020/159393 A1

(51) International Patent Classification:
G09F 19/02 (2006.01) *G09F 25/00* (2006.01)
G09F 19/10 (2006.01) *G09F 27/00* (2006.01)
G09F 23/06 (2006.01)

(21) International Application Number:
PCT/RO2020/000003

(22) International Filing Date:
31 January 2020 (31.01.2020)

(25) Filing Language: English

(26) Publication Language: English

(30) Priority Data:
a 2019 00056 01 February 2019 (01.02.2019) RO

(71) Applicant: **TOKINOMO MARKETING SRL** [RO/RO]; Str. Despot Vodă nr. 42-44, et. 4, ap. 11, sector 2, Bucureşti (RO).

(72) Inventor: **VLAD CLUVE, Mircea Ioan**; Str. Despot Vodă nr. 42-44, et. 4, ap. 11, sector 2, Bucureşti (RO).

(74) Agent: **PLOSCĂ, Daniel**; Ratza & Ratza, Ratza Building, Blvd. A.I. Cuza nr. 52-54, Sector 1, Bucureşti (RO).

(81) Designated States *(unless otherwise indicated, for every kind of national protection available)*: AE, AG, AL, AM, AO, AT, AU, AZ, BA, BB, BG, BH, BN, BR, BW, BY, BZ, CA, CH, CL, CN, CO, CR, CU, CZ, DE, DJ, DK, DM, DO, DZ, EC, EE, EG, ES, FI, GB, GD, GE, GH, GM, GT, HN, HR, HU, ID, IL, IN, IR, IS, JO, JP, KE, KG, KH, KN, KP, KR, KW, KZ, LA, LC, LK, LR, LS, LU, LY, MA, MD, ME, MG, MK, MN, MW, MX, MY, MZ, NA, NG, NI, NO, NZ, OM, PA, PE, PG, PH, PL, PT, QA, RO, RS, RU, RW, SA,

(54) Title: SMART DEVICE FOR PROMOTING PRODUCTS ON A SHELF

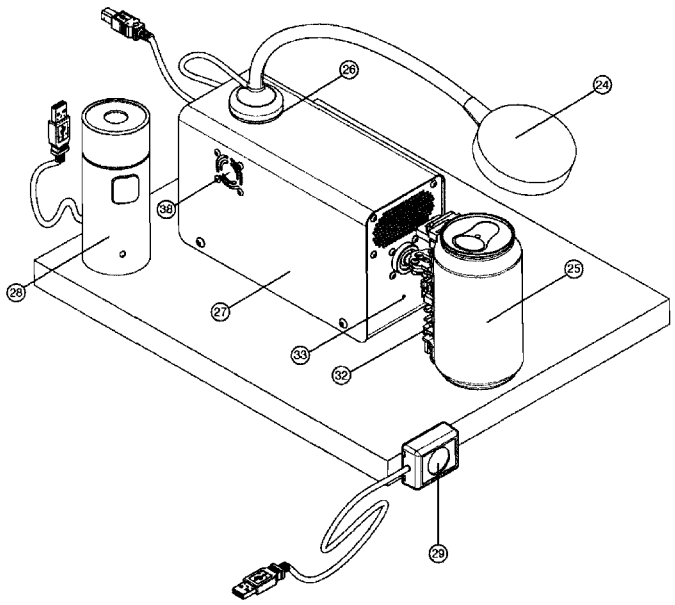

FIGURE 5

(57) Abstract: The invention refers to a smart device for the promotion of shelf products which are exhibited in supermarkets, pharmacies, gas stations, DIY stores, etc. through sound, motion, light and smell when a consumer passes next to the shelf, used in advertising, marketing. The smart device for promoting products on a shelf is characterized in that it consists of a motion transmission system (T) installed in a box (1), a modular universal gripping system (32) made of metal or plastic, an integrated electronic circuit board (35) based on a microprocessor installed in the box (1) on which control and command components are installed; an electronically controlled magnet lamp (24), an electronically controlled smell dispenser (28), the lamp (24) and the dispenser (28) being installed outside the box (1); an audio system (A) consisting of a loudspeaker (34) installed inside the box (1) and an audio amplifier (37) installed on the electronic board (35); a motion sensor (29) detecting the consumer, and communication means (C) installed on the electronic board (35)

WO 2020/159393 A1

[Continued on next page]

SC, SD, SE, SG, SK, SL, ST, SV, SY, TH, TJ, TM, TN, TR, TT, TZ, UA, UG, US, UZ, VC, VN, WS, ZA, ZM, ZW.

(84) **Designated States** *(unless otherwise indicated, for every kind of regional protection available)*: ARIPO (BW, GH, GM, KE, LR, LS, MW, MZ, NA, RW, SD, SL, ST, SZ, TZ, UG, ZM, ZW), Eurasian (AM, AZ, BY, KG, KZ, RU, TJ, TM), European (AL, AT, BE, BG, CH, CY, CZ, DE, DK, EE, ES, FI, FR, GB, GR, HR, HU, IE, IS, IT, LT, LU, LV, MC, MK, MT, NL, NO, PL, PT, RO, RS, SE, SI, SK, SM, TR), OAPI (BF, BJ, CF, CG, CI, CM, GA, GN, GQ, GW, KM, ML, MR, NE, SN, TD, TG).

Declarations under Rule 4.17:

— *as to applicant's entitlement to apply for and be granted a patent (Rule 4.17(ii))*
— *as to the applicant's entitlement to claim the priority of the earlier application (Rule 4.17(iii))*
— *of inventorship (Rule 4.17(iv))*

Published:

— *with international search report (Art. 21(3))*
— *before the expiration of the time limit for amending the claims and to be republished in the event of receipt of amendments (Rule 48.2(h))*

for bidirectional transmission/reception of the commands on the type of motion, the type and frequency of illumination, smell dispenser operating interval, the device's operating hours, the customized transmission of the audio/light message according to the consumer's characteristics, reports on the traffic in front of the shelf where the device is installed, and the number of interactions with the consumer, this information being uploaded on the web platform and sent as a report to the customers.

SMART DEVICE FOR PROMOTING PRODUCTS ON A SHELF

The invention refers to a smart device for promoting products on a shelf which are exhibited in supermarkets, pharmacies, gas stations, DIY stores, etc. through sound, motion, light and smell when a consumer passes next to the shelf, used in advertising, marketing.

Currently, the device for promoting products on a shelf is known only through sound and motion (patent application no. RO130106A0, authors MIRCEA-IOAN VLAD-CLUVE and RADU BOGDAN). The device according to RO130106A0 consists of a box having in the inside a step by step motor coupled to a drive wheel which engages the inner end of a movable shaft supported at the opposite end by some bearings and provided with a clamping system of the product, an audio speaker, a microprocessor, an MP3 player, a motor driver, a voltage regulator. On the outside of the box, in the proximity of the product, a remote sensor is provided which automatically controls the microprocessor when the consumer passes next to the product, the wheel motion being controlled by a position sensor that detects where the wheel is located and orders the motor to change the direction of movement forward and backward.

The disadvantages of this device are:

- the product must be monitored daily by people physically present in stores, not provided with means of communication for transmitting information about consumers interested in products;

- settings difficult to change, each device must be set individually after a laborious process;

- it does not have a universal product grip, which means that for each product a special piece has to be made, thus increasing the time and cost of preparing the campaigns;

- it has been found, following device operation, that the transmission mechanism is not reliable enough, it is failing relatively frequently;

- it does not have the ability to illuminate the product, or to spread odors, which limits the potential impact on the consumer;

- is noisy because of the motor and transmission system, which disturbs consumers in stores;

- does not have a clearly established shelf fastening system, which raises stability issues and increases the risk of damage;

- it does not have a protection system when the consumer pulls the product so that the mechanism cannot be jammed;

- it is impossible to differentiate between consumer detection and a physical object placed in front of the shelf (such as a shopping trolley or a cargo pallet);

- cannot be turned off when the store is closed which leads to unnecessary energy consumption;

The technical problem solved by the invention lies in the realization of a remote controlled automated device for promoting products displayed on a shelf.

According to the invention, the shelf-promotion device, according to the invention, is characterized in that it consists of:

- a motion transmission system installed in the box;

- a modular universal product gripping system made of metal or plastic,

- an electronic integrated circuit board based on a microprocessor installed in the box on which commanding and control components are installed,

- a led lamp installed outside the box

- a smell dispenser installed outside the box;

- an audio system consisting of a loudspeaker installed inside the box and an audio amplifier on the electronic board; and

- communication components mounted on a board for bidirectional transmission of commands on the type of motion, illumination type and frequency, smell dispenser operating interval, device operating hours, customized audio/light message transmission

according to consumer characteristics, reports on traffic in front of the shelf where the device is installed, and the number of interactions with the consumer, this information being uploaded to a web platform and sent as a report to the customers.

According to another aspect of the invention, the motion sensor is a video camera.

According to another aspect of the invention, the smart device has a motion transmission system consisting of a chassis which is coupled to an electric motor with a vibration damper coupled to a toothed pulley on which is installed a synchronous transmission belt 6 which rotates an assembly consisting of another toothed pulley having a 2/1 transmission ratio, a piston rod provided with radial ball bearings 9 on which a metal shaft is attached, which at the other end rests on a spherical ball bearing allowing movement on multiple axles, such ball bearing sitting in a housing, the piston rod being mechanically blocked by the top of the chassis 13 so that, even if a consumer pulls the product, the mechanism cannot be jammed.

According to another aspect of the invention, the gripping system consists of:

- an "O" part which connects the universal grip to the shaft 10 of the device and can, by means of washers, correct when needed the angle of inclination of the grip so as to be parallel to the ground;

- a "Comb" part which has the function of a "spine" from which the other parts are gripped by the teeth provided for this purpose;

- a small sole for accommodating products of small thickness and supporting the weight of the product;

- a big sole for accommodating products of higher thicknesses and supporting the weight of the product;

- an "Extender" part that can be fastened to the "Comb" part by means of a "Connector" 19 if the product is tall and provided with teeth on both sides;

- an "S" part having 2 cavities, the first cavity being used to be connected to the "Comb" or "Extender" part by sliding through their teeth to the desired height, the second cavity being used to insert a hook-and-loop or double-sticking tape;

- an "E" part having 2 cavities, the first cavity being used to be connected to the "Comb" or the "Extender" part by sliding through their teeth to the desired height, the second cavity being used to insert a hook-and-loop or double-sticking tape;

- a "3-teeth" part with 4 cavities, the first 3 cavities used to be connected to the "Comb" or "Extender" part;

- the connector which is intended to connect the "Comb" part with the "Extender" part if the product is tall;

- a hook-and-loop or double-sticking tape that will be inserted into the special cavity provided in "S", "E" or "3 teeth" part, the product being attached to this tape.

According to another aspect of the invention, the attachment of the device is made by rubber or plastic/silicone suction cups or by a magnet or double-stick tape.

According to another aspect of the invention, the integrated circuit board includes:

- a voltage regulator that lowers the voltage from 12V to 5V to power the components operating at 5V - such as rnicroprocessor, microcontroller, fan;

- a microprocessor on which a dedicated program is installed, which receives the signal from a motion sensor/video camera installed outside the box, and decides to start an activation, controlling the led lamp, the motor, running the audio file, and/or a smell dispenser, and connects to the web platform or mobile application;

- a microcontroller that receives the command from the microprocessor and controls in turn the motor, the led lamp, a RGB light control indicator, a fan and a voltage sensor, and receives signal from the motion sensor, which sends it further to the microprocessor;

- a battery clock module that allows time to be counted when the device is turned off;

- a motor driver that receives the command from the microcontroller and in turn controls the motor motion,

- an audio amplifier that boosts the signal strength received from the microprocessor;

- a voltage sensor designed to determine if the device is connected to an external battery, the charging level of the battery is and to warn the web platform when it has to be recharged,

- an infrared position sensor designed to detect the position of the mechanism and to transmit this information to the microprocessor via the microcontroller

- integrated WiFi/Bluetooth modules designed to transmit and receive radio signal over WiFi to communicate over the Internet through dedicated application, or connect the device via Bluetooth to the mobile phone through the dedicated application,

- a cellular transmission module, if a WiFi network is not available, allowing it to connect to the Internet and transmit/receive data.

According to another aspect of the invention, WiFi/Bluetooth consists of separate WiFi module and Bluetooth module.

According to another aspect of the invention, a temperature sensor is also installed in the box which measures the temperature inside the housing and sends it to the microprocessor which decides whether to start the fan when the temperature in the box 1 exceeds 50°C.

The benefits of the new device are:

- due to its much smaller dimensions it occupies only one side of the shelf;

- allows automated alerts to be sent to the server when the device is not working properly, and at the same time allows remote set-up of all devices, thus significantly reducing costs and time;

- allows testing the device proper functioning at the time of installation;

- facilitates connection to a new WiFi network;

- sends the device location to the server and allows us to set an audio volume that matches the location where it is installed.

- does not use additional tools (screwdriver, key, etc.) for fastening, can accommodate a wide variety of products, leading to significant elimination of operating costs, while being much easier to use;

- can be assembled and manufactured quickly, thus reducing costs and allowing mass production.

- the noise produced by the mechanism is significantly reduced;

- the device can support weights up to 1500 grams, thus diversifying the range of products that can be promoted.

- allows automatic shutdown of the device when the store is closed and automatic start when the store opens again.

An embodiment example of the invention will now be described with reference to figures 1-6 which are:

Figure 1 - Block diagram of the device according to the invention;

Figure 2 - Side schematic view of the motion transmission system of the device according to the invention;

Figure 3 - Top schematic view of the integrated circuit board of the device according to the invention;

Figure 4 - View of the system for fastening/clamping the product according to the invention;

Figure 5 - Schematic view of the sound, motion, light and odor elements outside the box of the device according to the invention;

Figure 6 - Bottom view of the shelving system;

Figure 7 - Simplified logic scheme of operation of the device according to the invention.

The device for promoting products on the shelf by sound, motion, light and odor, Figure 1, consists of a motion transmission system **T** installed in a box 1, a modular universal gripping system **32** made of metal or plastic, a microprocessor-based electronic circuit board **35** installed in the box **1**, an electronically controlled magnet lamp **24**, an electronically controlled smell dispenser **28**, the lamp **24** and the dispenser **28** being installed outside the box **1**. The device is further provided with an audio system **A** consisting of a loudspeaker **34** installed inside the box **1** and an audio amplifier **37** installed on the board **35**, and the communication module **C** for transmitting remote commands relating to the type of motion, light intensity, odor type/intensity, device operating time, customized audio message transmission according to consumer characteristics, etc. to a web platform/mobile phone.

According to **Figure 2**, in the box **1** is installed the motion transmission system **A** consisting of a chassis **2**, to which is attached an electric motor **3** with a vibration damper **4** coupled to a toothed pulley **5** on which is installed a synchronous transmission belt **6** which rotates an assembly composed of another toothed pulley **7** (having a transmission ratio of 2/1), a piston rod **8** provided with radial ball bearings **9**, from which a metal shaft **10** is clamped, which at the other end rests on a ball bearing **11** that allows multiple axis movement, bearing ball sitting in a specially designed housing **12**. The piston rod is mechanically blocked by the upper part **13** of the chassis **2** so that even if a consumer pulls the product, the mechanism cannot be jammed.

The device according to the invention, Figure 4, is furthermore provided with a modular universal metal or plastic gripping system **32** consisting of an assembly of parts easily to install/disassembly in order to accommodate any type of product.

These parts are:

"O" part **14** which connects the universal grip to the shaft **10** of the device and can, by means of washers, correct when needed the angle of inclination of the grip so as to be parallel to the ground.

"Comb" part **15** which has the function of a "spine" from which the other parts are gripped by the teeth provided for this purpose.

A small sole **16** accommodating products of small thickness. This part supports the weight of the product.

A big sole **17** accommodating products of higher thicknesses. This part supports the weight of the product.

"Extender" part **18** that can be fastened to the "Comb" part by means of a "Connector" **19** if the product is tall and provided with teeth on both sides.

"S" part **20** having 2 cavities. The first cavity is used to be connected to the "Comb" **15** or "Extender" **18** by sliding through their teeth to the desired height. The second cavity is used to insert a hook-and-loop stripe or double-stick tape **21**.

"E" part **22** having 2 cavities. The first cavity is used to be connected to the "Comb" **15** or the "Extender" **18** by sliding through their teeth to the desired height. The second cavity is used to insert a hook-and-loop stripe or double-stick tape **21**. Whereas parts “S” and “E” **20, 22** slide in opposite directions, they lock on each other so that the product does not accidentally come out during use.

"3-teeth" part **23** with 4 cavities. The first 3 cavities are used to be connected to the "Comb" or "Extender" part. This part is used as a spacer according to which one of the 3 cavities is used for connection. The shape of the product will dictate which of the 3 cavities will be connected to the "Comb" or "Extension" parts.

The connector **19** is intended to connect the "Comb" part with the "Extender" part if the product is tall.

A double lock stripe **21** or double-stick tape that will be inserted into the special cavity provided in "S", "E" or "3 teeth" parts. The product will be attached to this tape. Being flexible, this tape gently molds the shape of the product and keeps it attached to the device.

The shelf device is attached by rubber or plastic/silicone suction cups or by magnet or double stick tape.

Box **1** is protected with a lid **27** that can be made of metal or plastic.

An integrated circuit board **35** incorporating a voltage regulator **38** that lowers the voltage from 12V to 5V is provided in box **1**, **Figure 3**, in order to power the components operating at 5V (microprocessor, microcontroller, fan) and a microprocessor **39**. The microprocessor **39** is intended to be the brain of the device. It has installed an operating system on which a dedicated program is received which receives the signal from the motion sensor/video camera **29** and decides to start an activation by commanding the led lamp **24**, the motor **3**, it runs the audio file, or the odor sprayer **28**, connects to the web platform or the mobile application. The electronic board **35** may further contain a microcontroller **40**. The microcontroller **40** receives the command from the microprocessor and in turn controls the motor, the led lamp, the RGB control light indicator **33**, the fan **38**, the voltage sensor, and receives a signal from the motion sensor which it sends further to the microprocessor. On the electronic board there is also provided a battery clock module **41** which allows time to be counted when the device is turned off, a motor driver **36** which receives the command from the microcontroller **40** and in turn controls the motor motion **3**, an audio amplifier **37** which increases the signal strength received from the microprocessor **39**, a temperature sensor (not shown) that measures the temperature inside the box **1** and sends it to the microprocessor **39** which decides whether to turn on the fan **38** - usually over 50°C, a voltage sensor (not shown) which is intended to determine, if the device is connected to an external battery, the charging level of the battery and to warn the web platform when it needs to be recharged, an infrared position sensor (not shown) which is intended to detect the position of the mechanism and transmit this information to the microprocessor **39** via microcontroller **40** and an audio loudspeaker **34** which plays the audio files sent by the microprocessor **39** through the audio amplifier and a fan **38** which starts when the temperature inside the device exceeds a certain value (50°C). On the electronic board **35**, there are also installed integrated WiFi/Bluetooth modules designed to transmit and receive radio signals over WiFi in order to communicate over the Internet via the dedicated application or to connect the device via Bluetooth to the mobile phone

through the dedicated application. As a rule, the Bluetooth module is integrated with the WiFi one, but they are two different technologies that are used differently and can be installed separately. The communication means **C** further comprises a cellular transmission module **31**, if a WiFi network is not available, allowing it to connect to the Internet and transmit/receive data. There is also a start/stop button **42** on the back of the box.

According to Figure **5**, box 1 is placed on the shelf behind the visible line of products.

Outside the box **1**, a motion sensor **29**, a led lamp **24** and an odor spray **28** are installed on the back of the box **1** via USB ports. The lamp has a magnet **26** which allows it to be attached to the metal housing **279** of the device or to the metal shelves. A RGB light indicator **33** is installed in front of the box **1** which indicates the operating state of the device by changing the color or frequency of the signal. At the external end of the shaft **10** is installed the universal grip system **32** to which the product **25** to be promoted is attached.

According to another embodiment, the motion sensor **29** is replaced by a video camera.

According to **Figure 6** the attachment of the shelf device can be made by rubber or plastic/silicone rubber suction cups **45** or by magnet **44** or by hook-and-loop stripe **43**.

The mode of operation is shown in **Figure 7**. As soon as the motion sensor or video camera **29** detects the presence of the consumer in proximity, a signal is sent to the microprocessor **39**. It triggers an activation consisting of moving the product back and forth on the x-y axes in synchronous playback of the audio file (which may be a promotional message or a piece of music), turning on the led lamp **24** and/or the odor spraying by the odor sprayer **28**.

Specifically, in order to move the product, the microprocessor **39** transmits a command to the microcontroller **40** which in turn gives a command to the motor driver **36** controlling the movement of the motor **3**. The motor **3** moves the shaft via the transmission system **T** consisting of the pulleys **5, 7,** belt **6** and crank rod **8**. With dedicated software, one can set more types of movement: slow or fast, random back and forth, constant back and forth,

or if the audio file contains a song, a precise control of the movement in the rhythm of the music, so that the product seems to dance. Through the dedicated audio software one can also set the audio volume, as well as the flashing sequence of the led lamp **24** and the odor sprayer **28**.

At the same time, by counting the number of activations and the number of motion sensor or video camera triggers **29**, a report is generated that is forwarded to the dedicated server.

When the video camera is used for detection, the audio message can be customized according to the consumer profile *(Example: The message for a young woman may differ from that for an elderly man).*

The settings for each promotion campaign are made on the dedicated web platform and are sent to the device via the Internet.

To set up a new Internet connection, one can use the dedicated mobile application that connects to the device via Bluetooth. It may also be used to transmit the location in which the device is installed, to set the volume and to test the smooth operation of the motion, the led lamp **24**, the motion sensor or the video camera **29**, the fan **38** and the odor sprayer **28**.

The use of a led lamp **24** to illuminate the product **25** can be synchronized with the movement of the product and the sound reproduction. This lamp can be illuminated for the entire duration of the activation, or it can be programmed to flash at preset intervals or to illuminate at the customer's request.

The smell dispenser **28** is connected via USB and sprays the aroma at preset intervals depending on the traffic in the store. Setting up this system will also be done through the dedicated web platform.

By using a motion sensor or a video camera **29** for detecting the consumers and triggering the activation of the device, depending on the type of detection used, it will be possible to extract traffic data from the respective shelf where the device is installed, as well as the number of interactions with the consumer. If a video camera is used, the audio message

can be customized according to the consumer profile *(Example: young or elder man, young or elder woman).* This information will be uploaded to the web platform and will be sent as a report to the customer.

Information transmission is provided by the means of communication, namely the WiFi/Bluetooth module **30**, the cellular transmission module **31**, modules which allow, in conjunction with the web platform or the mobile phone application, to remotely transmit the motor operating parameters **3**, the parameters of the led lamp **24**, of the smell dispenser **28**, to upload new audio files, to set the operating range of the device, to remotely monitor the operation of the device as well as in case of malfunctions, indications about the nature of the malfunction.

It will be understood that various details of the object described herein may be altered without going away from the scope. Furthermore, the foregoing description is merely intended to illustrate and not limit, so that the subject matter of the invention is defined by the claims set forth below.

CLAIMS

1. A smart device for the promotion of shelf products **characterized in that** it consists of:

- a motion transmission system (**T**) installed in a box (**1**);

- a modular universal product gripping system (**32**) made of metal or plastic,

- an integrated electronic circuit board (**35**) based on a microprocessor installed in the box (**1**) on which control and command components are installed,

- a product lighting system (**24**) consisting of an electronically controlled magnet lamp,

- and a smell dispenser system (**28**) consisting of an electronically controlled smell dispenser (**28**) installed outside the box (**1**);

- an audio system, consisting of a loudspeaker (**34**) and an audio amplifier (**37**) installed inside the box (**1**);

- a motion sensor (**29**) detecting the consumer, and

- some communication means (**C**) installed on the electronic board (**35**) for bidirectional transmission/reception of the motion type commands, the type and frequency of illumination, the frequency of the odor triggering, the operating life of the device, the personalized transmission of the audio/light message according to consumer characteristics, reports on the traffic in front of the shelf where the device is installed, and the number of interactions with the consumer, this information being uploaded to a web platform and sent as a report to the customers.

2. A smart device according to claim 1, **characterized in that** the motion sensor (**29**) is a video camera.

3. A smart device according to claim 1, **characterized in that** the motion transmission system (**T**) consists of a chassis (**2**), to which an electric motor (**3**) with a shock absorber (**4**) coupled to a toothed pulley (**5**) on which is installed a synchronous transmission belt (**6**) which rotates an assembly composed of another toothed pulley (**7**) having a transmission ratio of 2/1, a piston rod (**8**) provided with radial ball bearings (**9**) of which a

metal shaft (**10**) is attached, which at the other end rests on a spherical bearing (**11**) allowing the movement on multiple axes, ball bearing sitting in a bearing (**12**), the piston rod (**8**) being mechanically blocked by the top (**13**) of the chassis (**2**) so that, even if a consumer pulls the product, the mechanism cannot be jammed.

4. A smart device according to claim 1, **characterized in that** the product gripping system (**32**) consists of:

- an "O" part (**14**) which connects the universal grip to the shaft (**10**) of the device and can, by means of washers, correct when needed the angle of inclination of the grip so as to be parallel to the ground;

- a "Comb" part (**15**) which has the function of a "spine" from which the other parts are gripped by the teeth provided for this purpose;

- a small sole (**16**) for accommodating products of small thickness and supporting the weight of the product;

- a big sole (**17**) for accommodating products of higher thicknesses and supporting the weight of the product;

- an "Extender" part (**18**) that can be fastened to the "Comb" part by means of a "Connector" (**19**) if the product is tall and provided with teeth on both sides;

- an "S" part (**20**) having 2 cavities, the first cavity being used to be connected to the "Comb" (**15**) or "Extender" part (**18**) by sliding through their teeth to the desired height, the second cavity being used to insert a hook-and-loop or double-stick tape (**21**);

- an "E" part (**22**) having 2 cavities, the first cavity being used to be connected to the "Comb" (**15**) or the "Extender" part (**18**) by sliding through their teeth to the desired height, the second cavity being used to insert a hook-and-loop or double-sticking tape (**21**);

- a "3-teeth" part (**23**) with 4 cavities, the first 3 cavities used to be connected to the "Comb" or "Extender" part and the fourth cavity to insert a hook-and-loop stripe or double-sticking tape (**21**);

- the connector (**19**) which is intended to connect the "Comb" part with the "Extender" part if the product is tall;

- a double-stick tape (**21**) that will be inserted into the special cavity provided in "S", "E" or "3 teeth" part, the product being attached to this tape.

5. A smart device according to claim 3, **characterized in that** the attachment of the shelf device is made by rubber or plastic/silicone suction cups or by a magnet or double-stick tape.

6. A smart device according to claim 1, **characterized in that** the integrated circuit board (**35**) consists of:

- a voltage regulator (**38**) which lowers the voltage from 12V to 5V to power the components operating at 5V - microprocessor, microcontroller, fan;

- a microprocessor (**39**), on which a dedicated program is installed, which receives the signal from a motion sensor/camera (**29**) installed outside the box, and decides to start an activation by commanding a led lamp (**24**) , the motor (**3**), runs the audio file, or an smell dispenser (**28**), and connects to the web platform or mobile application;

- a microcontroller (**40**) receiving the command from the microprocessor (**39**) and controlling in turn the motor (**3**), the led lamp (**24**), a RGB control light indicator (**33**), a fan (**38**) and voltage sensor, and receives signal from the motion sensor/video camera (**29**), which it sends further to the microprocessor (**39**);

- a battery operated clock module (**41**) which allows the tracking of time when the device is turned off;

- a motor driver (**36**) which receives the command from the microcontroller (**40**) and in turn controls the motor movement (**3**),

- an audio amplifier (**37**) which increases the power of the signal received from the microprocessor (**39**);

- the voltage sensor (not shown) designed to determine if the device is connected to an external battery, the charging level of the battery and to warn the web platform when it should be recharged,

- an infrared position sensor (not shown) which is intended to detect the position of the mechanism and to transmit this information to the microprocessor (**39**) via the microcontroller (**40**); and

- Integrated WiFi/Bluetooth modules (**30**) designed to transmit and receive radio signals over WiFi to communicate over the Internet through the dedicated application or connect the device via Bluetooth to the mobile phone through the dedicated application,

- a cellular transmission module (**31**), if a WiFi network is not available, allowing it to connect to the Internet and transmit/receive data, the integrated WiFi/Bluetooth modules (**30**), and the cellular transmission module (**31**) constituting means of communication (**C**).

7. A smart device according to claim 6, **characterized in that** the WiFi/Bluetooth modules (**30**) consist of separate WiFi mode and Bluetooth modules.

8. A smart device according to claim 1, **characterized in that** a temperature sensor (not shown) is installed in the box (**1**), measuring the temperature inside the housing and sending it to the microprocessor (**39**) which decides whether to start the fan (**38**), when the temperature in the box (**1**) exceeds 50°C.

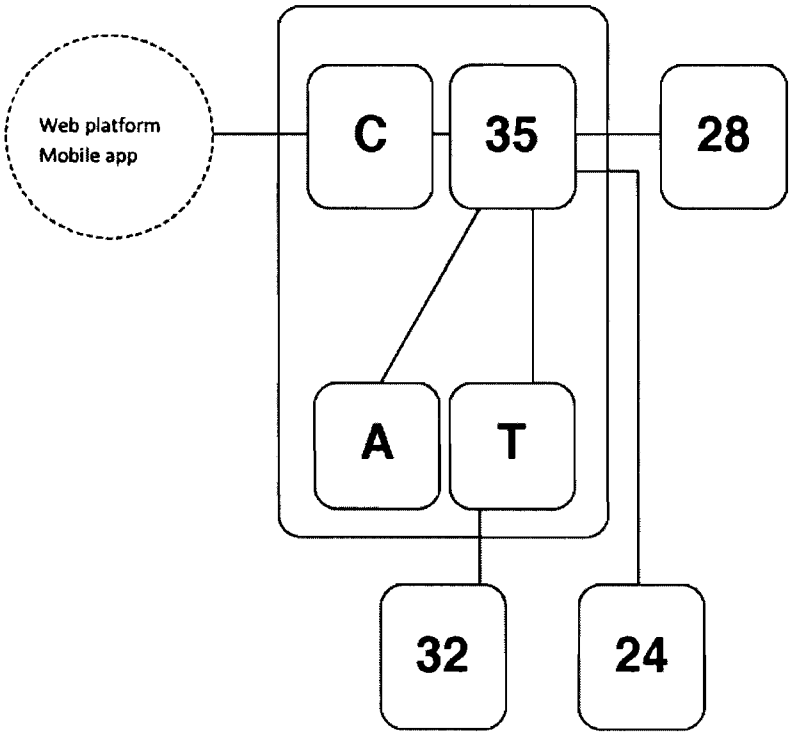

FIGURE 1

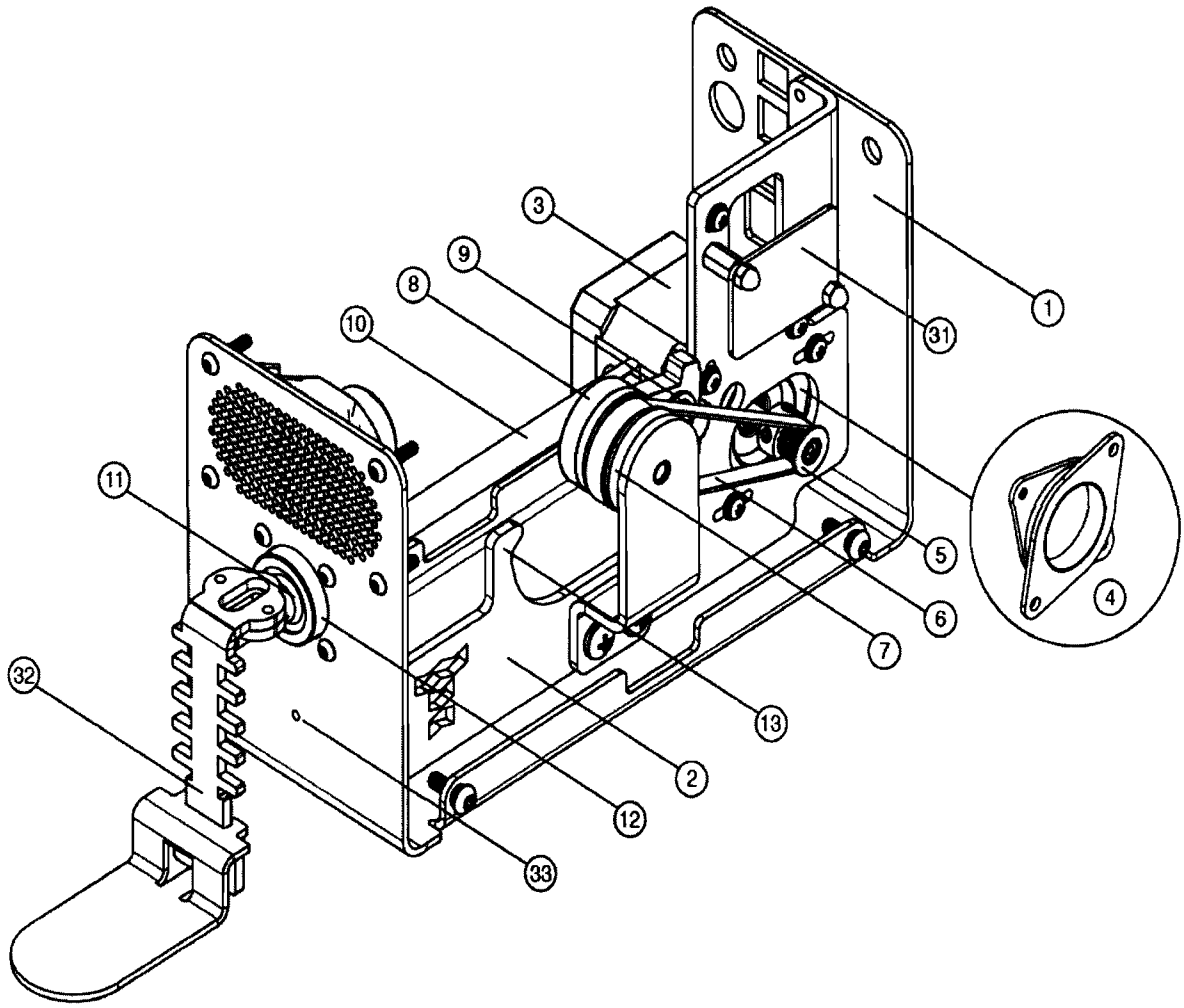

FIGURE 2

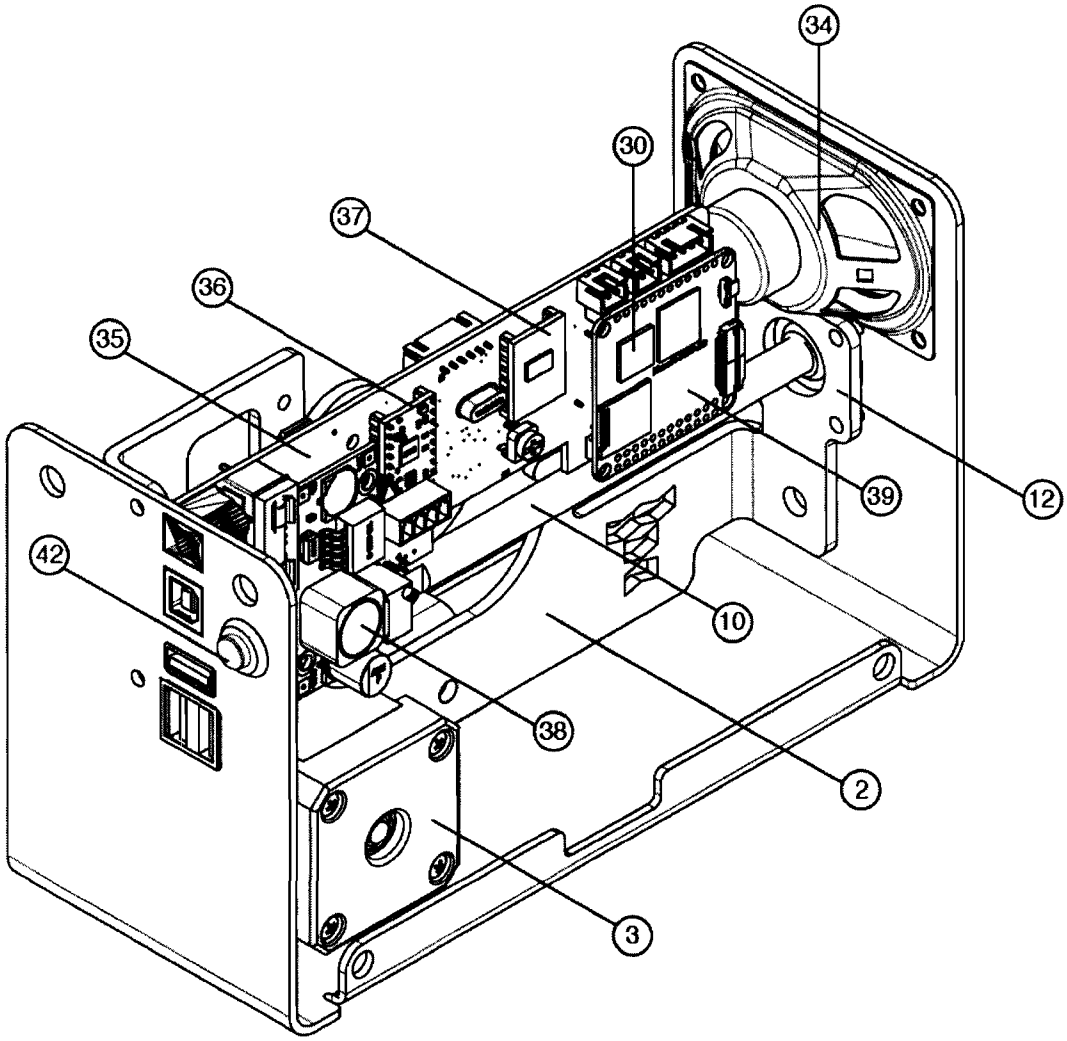

FIGURE 3

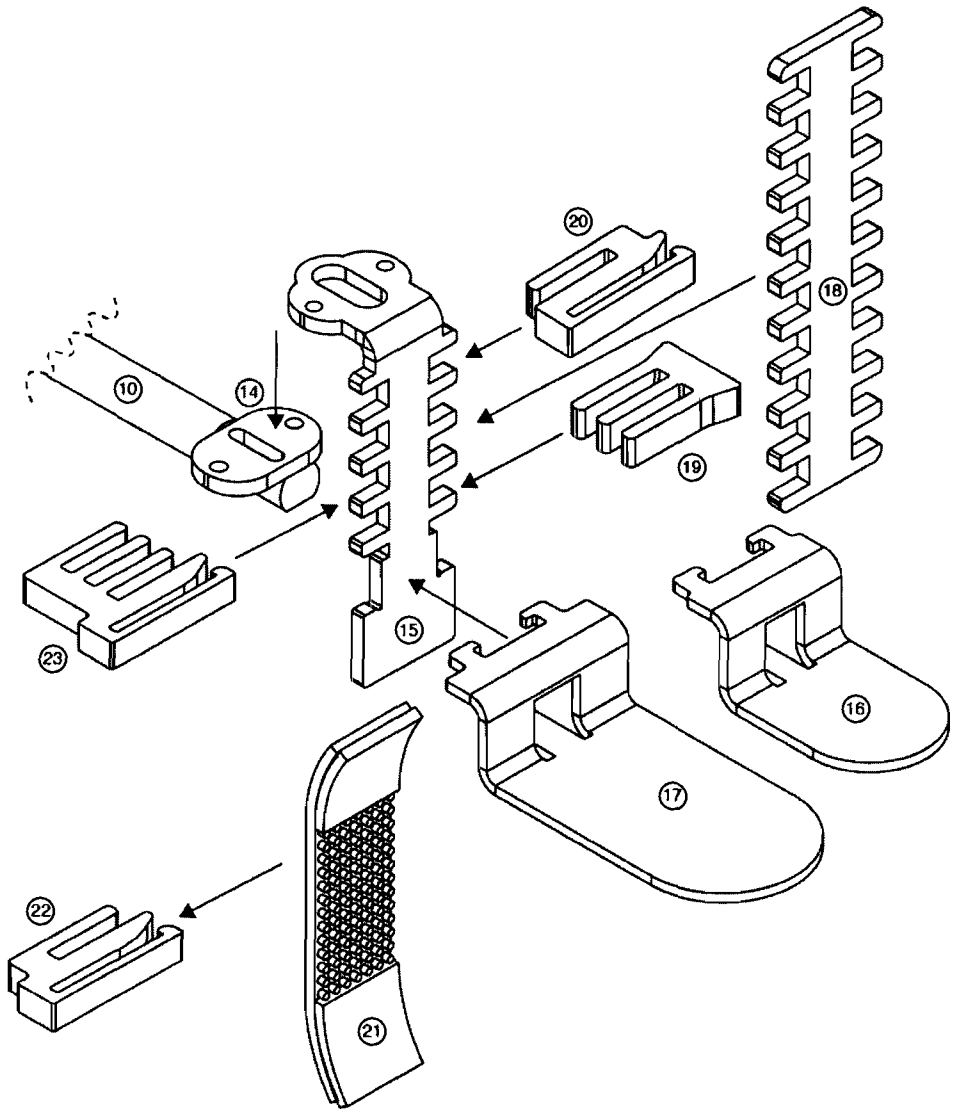

FIGURE 4

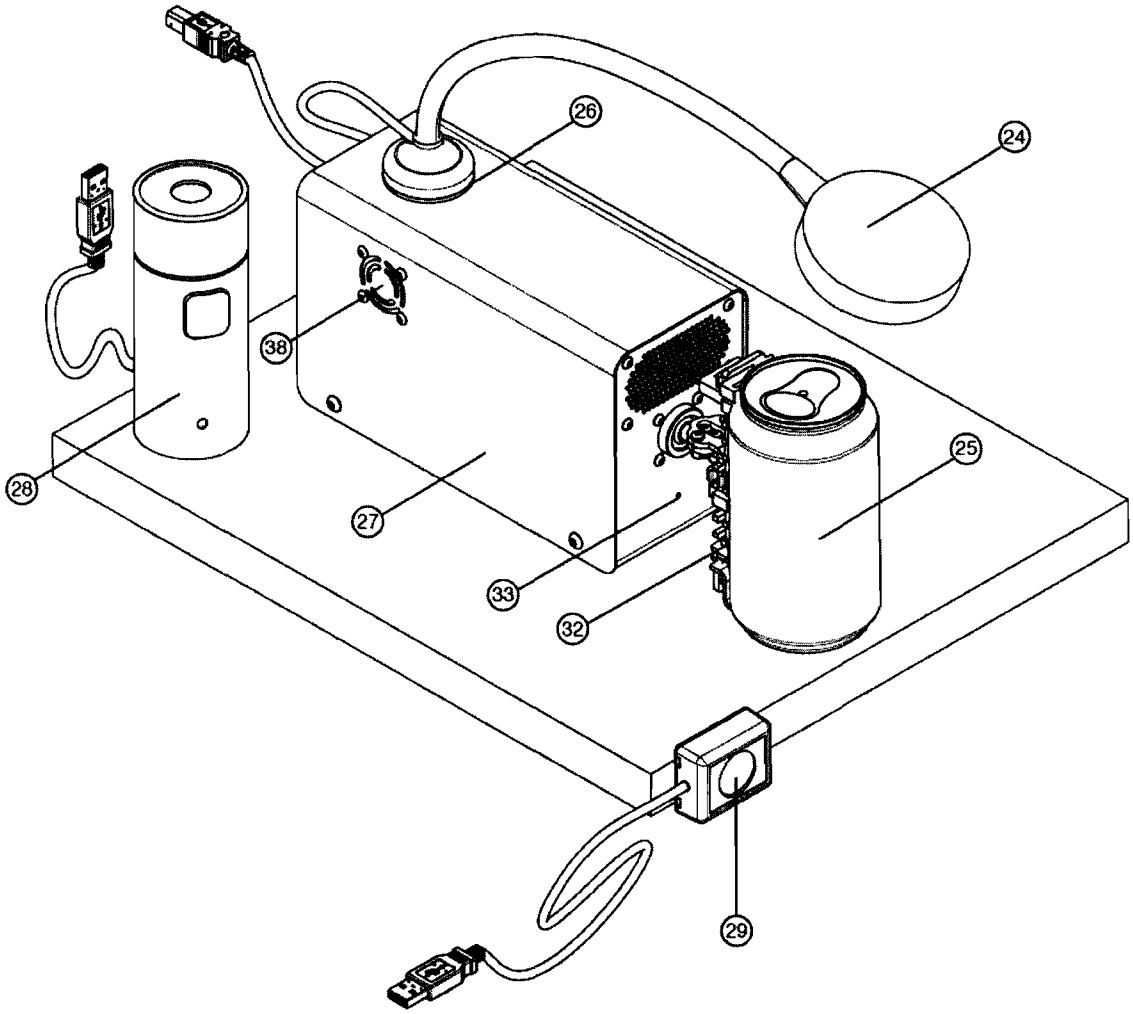

FIGURE 5

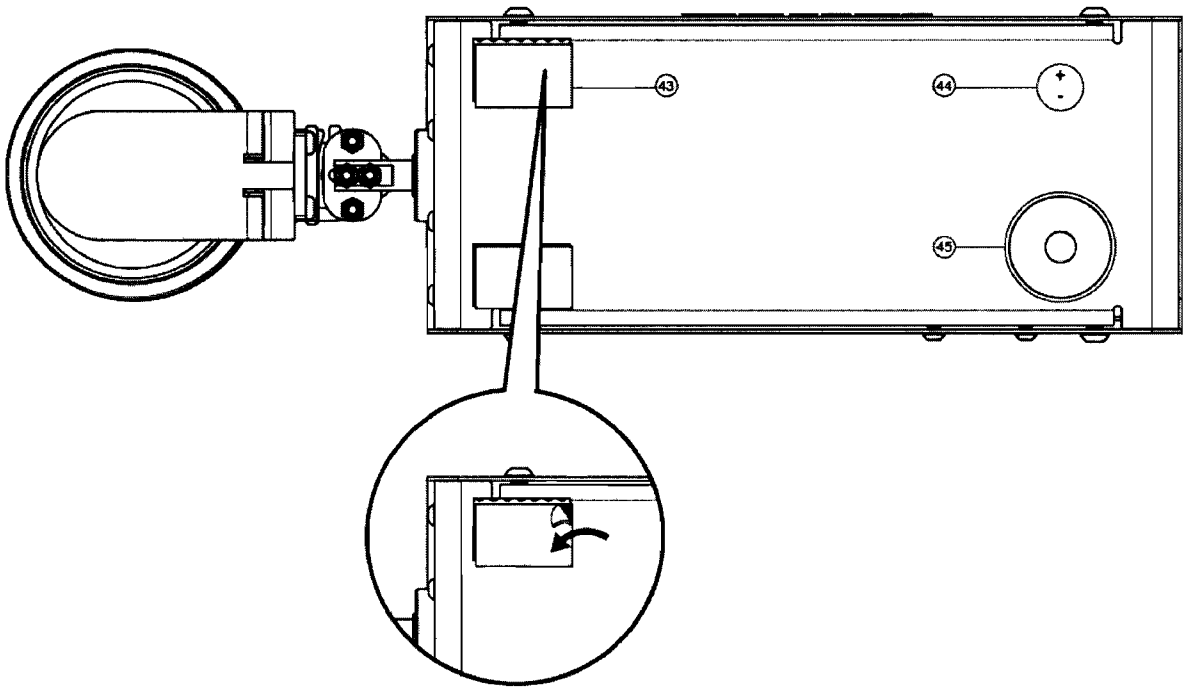

FIGURE 6

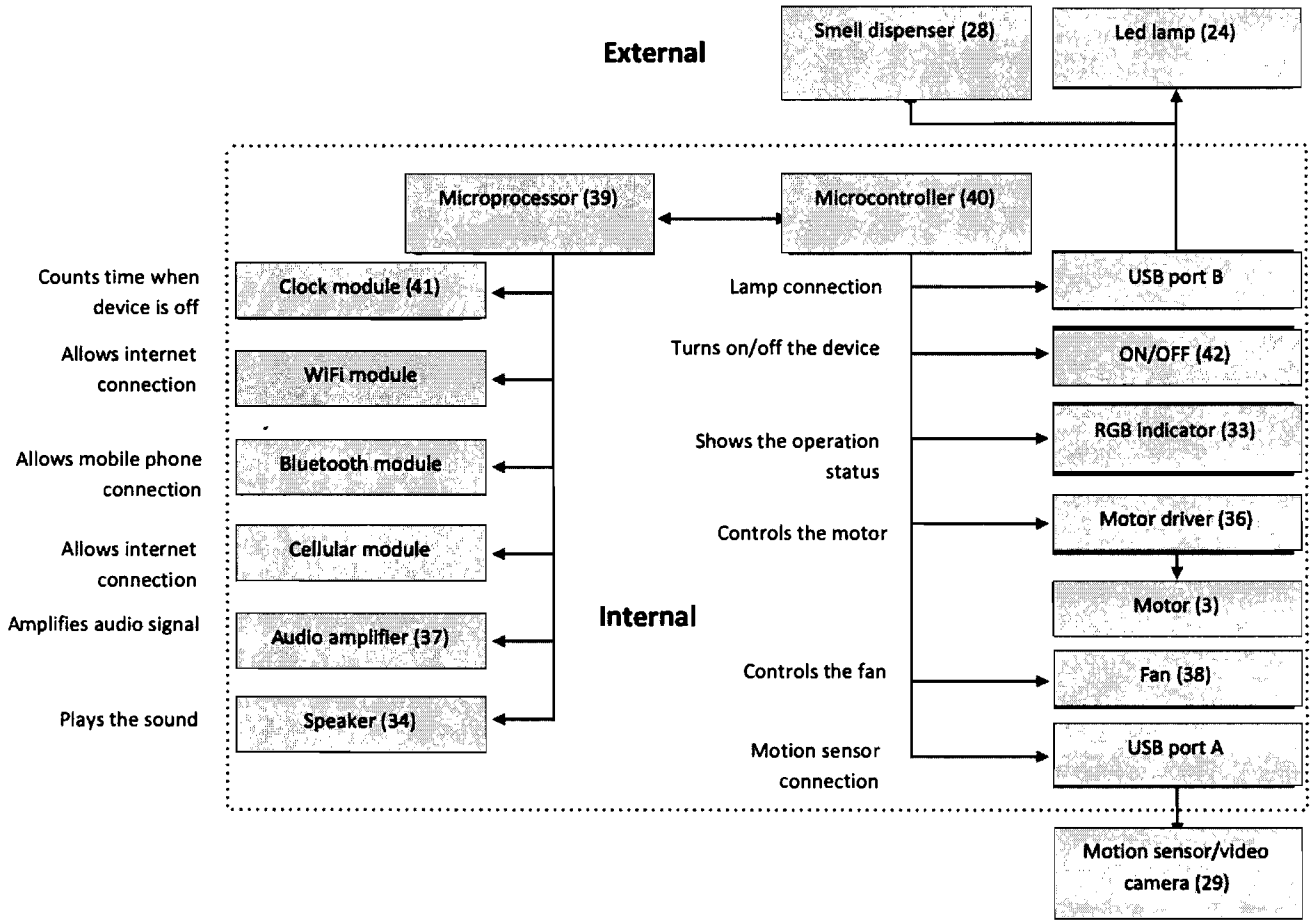

FIGURE 7
Simplified logic scheme

INTERNATIONAL SEARCH REPORT

International application No
PCT/RO2020/000003

A. CLASSIFICATION OF SUBJECT MATTER
INV. G09F19/02 G09F19/10 G09F23/06 G09F25/00
ADD. G09F27/00

According to International Patent Classification (IPC) or to both national classification and IPC

B. FIELDS SEARCHED

Minimum documentation searched (classification system followed by classification symbols)
G09F A47F

Documentation searched other than minimum documentation to the extent that such documents are included in the fields searched

Electronic data base consulted during the international search (name of data base and, where practicable, search terms used)
EPO-Internal, WPI Data

C. DOCUMENTS CONSIDERED TO BE RELEVANT

Category*	Citation of document, with indication, where appropriate, of the relevant passages	Relevant to claim No.
X	US 2016/349543 A1 (ROGERS JAMES WILLIAM [US]) 1 December 2016 (2016-12-01)	1,2,5
Y	paragraph [0028] - paragraph [0041] paragraph [0048] - paragraph [0083] figures 1-8	7,8

Y	US 2013/056555 A1 (YUHKI TAKAYUKI [JP] ET AL) 7 March 2013 (2013-03-07)	7,8
A	paragraph [0070] - paragraph [0119] paragraph [0147] - paragraph [0165] paragraph [0207] - paragraph [0247] figures 1-13	1-6

A	RO 130 804 A0 (VLAD-CLUVE MIRCEA-IOAN [RO]; BOGDAN RADU [RO]) 30 December 2015 (2015-12-30) paragraph [0007] - paragraph [0017] figures 1-2b	1-3

	-/--	

[X] Further documents are listed in the continuation of Box C.

[X] See patent family annex.

* Special categories of cited documents :

"A" document defining the general state of the art which is not considered to be of particular relevance

"E" earlier application or patent but published on or after the international filing date

"L" document which may throw doubts on priority claim(s) or which is cited to establish the publication date of another citation or other special reason (as specified)

"O" document referring to an oral disclosure, use, exhibition or other means

"P" document published prior to the international filing date but later than the priority date claimed

"T" later document published after the international filing date or priority date and not in conflict with the application but cited to understand the principle or theory underlying the invention

"X" document of particular relevance; the claimed invention cannot be considered novel or cannot be considered to involve an inventive step when the document is taken alone

"Y" document of particular relevance; the claimed invention cannot be considered to involve an inventive step when the document is combined with one or more other such documents, such combination being obvious to a person skilled in the art

"&" document member of the same patent family

Date of the actual completion of the international search	Date of mailing of the international search report
15 June 2020	29/06/2020

Name and mailing address of the ISA/	Authorized officer
European Patent Office, P.B. 5818 Patentlaan 2 NL - 2280 HV Rijswijk Tel. (+31-70) 340-2040, Fax: (+31-70) 340-3016	Pantoja Conde, Ana

1

Form PCT/ISA/210 (second sheet) (April 2005)

INTERNATIONAL SEARCH REPORT

International application No
PCT/RO2020/000003

C(Continuation). DOCUMENTS CONSIDERED TO BE RELEVANT

Category*	Citation of document, with indication, where appropriate, of the relevant passages	Relevant to claim No.
A	JP 2018 045106 A (KAO CORP) 22 March 2018 (2018-03-22) abstract; figures 1-4 -----	1-8

1

INTERNATIONAL SEARCH REPORT

Information on patent family members

International application No
PCT/RO2020/000003

Patent document cited in search report	Publication date	Patent family member(s)	Publication date
US 2016349543 A1	01-12-2016	CN 107851412 A	27-03-2018
		EP 3304536 A1	11-04-2018
		JP 2018518710 A	12-07-2018
		US 2016349543 A1	01-12-2016
		WO 2016196182 A1	08-12-2016
US 2013056555 A1	07-03-2013	US 2013056555 A1	07-03-2013
		WO 2011126002 A1	13-10-2011
RO 130804 A0	30-12-2015	---	---
JP 2018045106 A	22-03-2018	JP 6527493 B2	05-06-2019
		JP 2018045106 A	22-03-2018