Nov. 13, 1934. R. I. INNIS 1,980,621

SANITARY SANDAL

Filed April 26, 1934



Fig. 3.

Fig. 1.

Fig. 2.

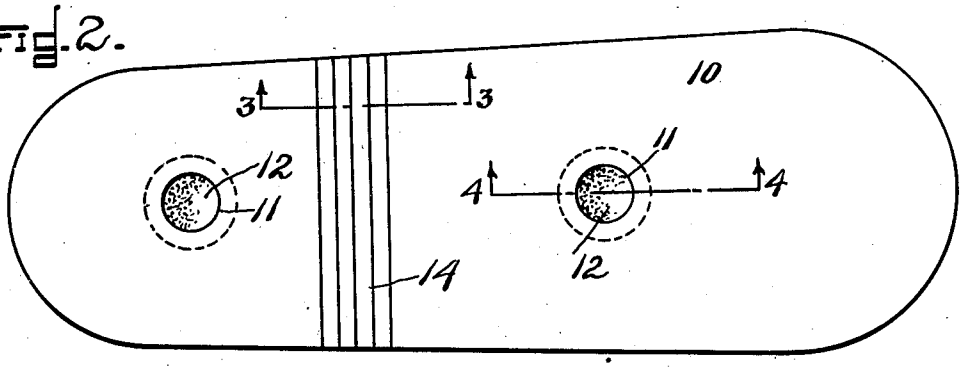

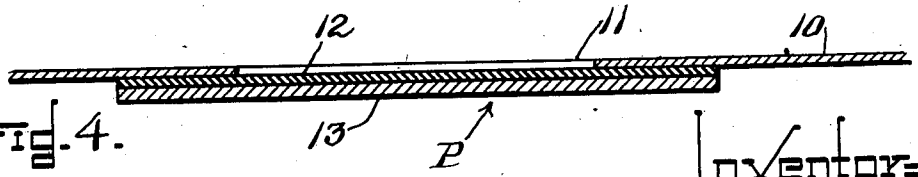

Fig. 4.

Fig. 5.



Inventor=
Robert I. Innis.
By Nathan F. Randall,
Atty.

Patented Nov. 13, 1934 1,980,621

UNITED STATES PATENT OFFICE

1,980,621

SANITARY SANDAL

Robert I. Innis, Winthrop, Mass.

Application April 26, 1934, Serial No. 722,454

9 Claims. (Cl. 36—11.5)

My invention relates to sanitary sandals or sole attachments to be worn upon the bottom of the foot to shield the latter and it is the object of this invention to provide an inexpensive device of this class of simple construction and which can be quickly applied to, or removed from the bottom of the foot of the person. More especially the object of the invention is to provide a sanitary sandal or sole attachment for the bottom of the foot adapted to be worn by a person while using a public bath or the like in order to prevent infection.

To these ends I have provided a new sanitary sandal or sole attachment for the bottom of a person's foot, said attachment consisting of a single piece of thin sheet material which may or may not be flexible as desired, but which is preferably waterproof and also being constructed with means for adhesively and removably fastening the same in position against the bottom of the foot of the wearer.

In practice the sheet material may be a cellulose product, glassine, or any other cheap sheet material that is suitable, the idea being that after one use the device is thrown away.

In the accompanying drawing:

Figure 1 is a side elevation of a human foot having my new sole attachment applied thereto.

Figure 2 is a top plan view of the sole attachment illustrated in Fig. 1.

Figure 3 is an enlarged section on line 3—3 of Fig. 2.

Figure 4 is an enlarged section on line 4—4 of Fig. 2.

Figure 5 is a modification.

The illustrated embodiment of my invention comprises a sole 10 of thin flexible waterproof sheet material such as treated paper, glassine, cellophane or any other cheap material that is suitable.

The sole 10 is made with two holes 11, one near each end thereof, and through each of which is exposed a layer of adhesive 12 carried by a small panel or disc 13 also made from thin flexible sheet material which may be a textile fabric.

The two layers 12 and 13 constitute a patch unit P which may be cut from a piece of surgeon's adhesive plaster, each patch unit being larger than the hole 11 and adhesively applied to the bottom of the sole 10 opposite its hole 11 so that the gummy side of the patch is exposed upon the top side of the sole as shown in Figure 2.

The material of the layer 12 of the patch of surgeon's plaster is waterproof and does not dry or set, that is, it does not air cure so that the sole will remain in condition for use for a long while.

The adhesive layer 12 of surgeon's adhesive plaster is usually a composition including rubber, pitch, and gums spread upon a textile backing sheet 13. This composition 12 will adhere strongly to any surface without setting or curing so that it can be quickly and cleanly removed or stripped from said surface when desired.

The sole is attached to the bottom of the foot by applying one of the patches 12—13 to the bottom of the heel and the other patch 12—13 to the bottom of the ball of the foot as shown in Figure 1, and as will be clear the device prevents the foot from coming in direct contact with the floor while taking a shower bath or while walking from a bathroom to a bedroom. It is easily stripped from the foot after use and its cost of production is so small that it can then be thrown away.

It is a feature of my invention that the sole 10 is pleated transversely between the two holes 11 as shown at 14 which permits the sole to be lengthened to fit feet of different lengths. That is to say, the device may be produced in small lengths with the pleats 14 so that in the event that it is used upon a long foot then the device may be extended longitudinally to fit the foot.

In Figure 1 the patches of surgeon's adhesive plaster are indicated at P.

When my new sanitary sandal or sole attachment is in use by a person taking a shower bath, his foot is prevented from contacting with the floor and is thus shielded against contagion. Also, while taking a shower bath the water flowing down the leg and over the foot creates currents of fresh water flowing away from the foot and sole attachment which prevents contaminated water from reaching the foot of the wearer.

The sandal or sole 10 may be impregnated with a chemical which, under the action of water, will release either chlorine, oxygen or a gas of similar nature which will have germicidal qualities or which may result in the formation of a germicidal solution.

In Figure 5 I have illustrated a modification wherein the textile fabric 13 is omitted and the adhesive layer is directly applied to the top side of the sole 10*a* as shown at 12*a*.

What I claim is:

1. A sanitary sandal or sole consisting of a single piece of thin sheet material having means for adhesively and removably fastening it in position upon the sole of a foot.

2. A sanitary sandal or sole consisting of a sin-

gle piece of thin sheet material that is substantially waterproof and having means for adhesively and removably fastening it in position upon the sole of a foot.

3. A sanitary sandal or sole consisting of a single piece of thin waterproof sheet material having means for adhesively and removably fastening it in position upon the sole of a foot.

4. A sanitary sandal or sole consisting of a single piece of thin flexible waterproof sheet material and including means for adhesively and removably fastening it in position upon the sole of a foot.

5. A sanitary sandal or sole comprising a single piece of thin sheet material formed with holes therethrough and a plurality of patches of adhesive plaster adhesively applied to the bottom of said sole each opposite one of the latter so that its adhesive material is exposed through said hole.

6. A sanitary sandal or sole comprising a single piece of sheet material and a plurality of patches of adhesive plaster attached to said sole for adhesively and removably fastening the latter upon the sole of a foot.

7. A sanitary sandal or sole of the character described consisting of a single piece of thin sheet material and comprising a patch of adhesive material fixed thereto and exposed upon the top side of said sandal or sole.

8. A sanitary sandal or sole comprising a single piece of thin sheet material having its intermediate portion pleated transversely to render the same longitudinally extensible, and means for adhesively and removably fastening the opposite end portions of said piece of sheet material in position upon the sole of a foot.

9. A sanitary sandal or sole comprising a single piece of sheet material having a hole formed through its fore-part to register with the ball of a foot and a hole formed through its heel-part to register with the heel of said foot, said piece of sheet material being pleated transversely between said two holes to render said piece longitudinally extensible, and two patches of adhesive plaster each adhesively applied to the bottom of said piece of sheet material opposite one of said holes so that its adhesive material is exposed through said hole for contact with said foot.

ROBERT I. INNIS.