July 2, 1929. J. A. FORSBERG 1,719,049

IGNITION SWITCH

Filed April 19, 1926

Fig. 1.

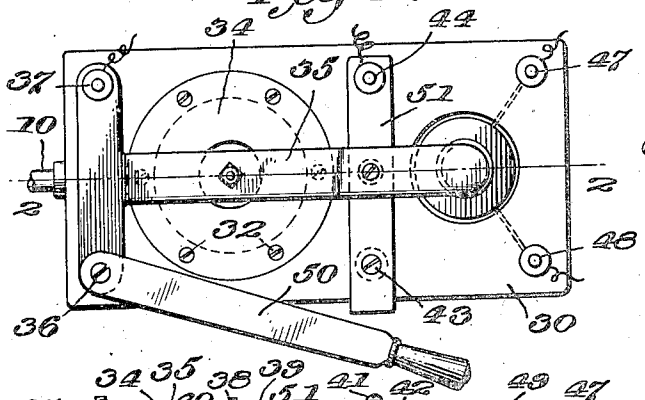


Fig. 3.

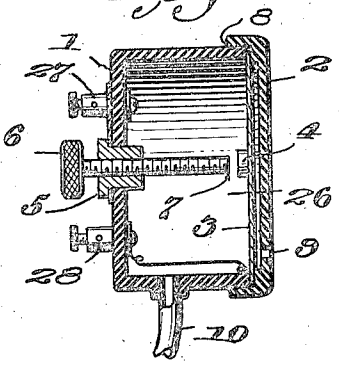


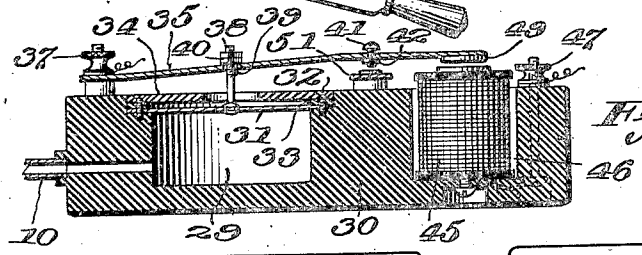


Fig. 2.

Fig. 4.

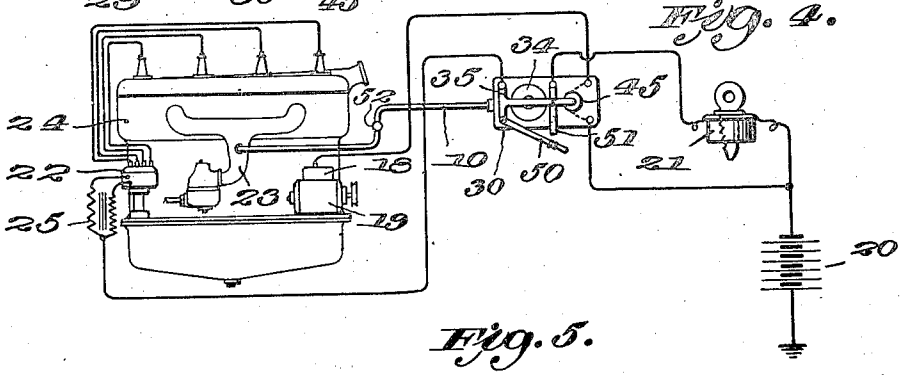


Fig. 5.

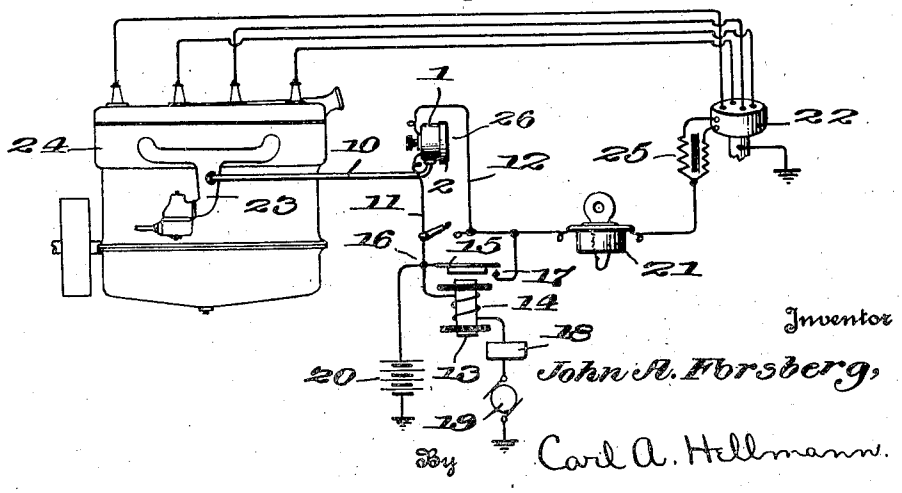


Inventor

John A. Forsberg,

By Carl A. Hellmann.

Attorney

Patented July 2, 1929. 1,719,049

# UNITED STATES PATENT OFFICE.

JOHN A. FORSBERG, OF CHICAGO, ILLINOIS.

## IGNITION SWITCH.

Application filed April 19, 1926. Serial No. 103,018.

My invention relates to ignition controlling means for internal combustion engines.

More specifically, it relates to means whereby the battery circuit supplying the ignition is automatically opened when the engine stops, whereby waste of battery current and consequent deterioration of the storage battery are prevented.

Other objects and advantages of my invention will be apparent from the present specification and accompanying drawing, wherein:—

Figure 1 represents diagrammatically a circuit controlling device embodying my invention;

Figure 2 is a section of Figure 1 on plane 2—2;

Figure 3 is a detail sectional view of a vacuum-actuated electric contact maker constituting a modified part of the invention;

Figure 4 is a diagram showing the electrical circuits used with the device of Figure 1; and

Figure 5 is a diagram showing the electrical circuits used with the device of Figure 3.

Referring first to Figure 5 of the drawing, there is shown a diagrammatic view of an internal combustion engine 24, having the usual distributor 22, and whose ignition is provided by means of the storage battery 20. This battery is kept charged by means of generator 19 driven by the engine, and an automatic cut-out 18 of the usual type is provided, to connect the generator to the battery when the speed of the engine is sufficient, but to disconnect it automatically when said speed falls so low that the battery would discharge back through the generator. The usual key-switch 21 is provided to break the primary ignition circuit through spark coil 25 when the engine is not running. All these details are old and well known. My invention consists in interposing in the ignition circuit two devices 13 and 26, which will automatically open the ignition circuit as soon as the engine ceases to operate.

Referring now to the device 26, which is indicated in Figure 5 as comprising a casing 1 and a cover 2, and which is shown in detail in Figure 3, the particular device shown comprises a casing 1 which may be made of any suitable insulating material such as bakelite for example, and a cover 2, made of any suitable material, for instance, a metal. A metallic diaphragm 3 is clamped between the casing 1 and cover 2, which are preferably secured to one another by means of screw threads 8. The diaphragm carries a contact element 4. A vent 9 may be provided in the cover 2, as shown. A metallic bushing 5 is secured in the rear wall of casing 1 and is screw-threaded to receive the adjusting screw 6, which has a knurled head, as shown, and has a contact 7 at its end, cooperating with contact 4 on the diaphragm 3. A tube 10 connects the interior of the casing 1 to the intake manifold 23 as shown in Figure 5. Wires 11 and 12 are connected to the bushing 5 and cover 2 respectively, as shown in Figures 5 and 3, binding posts 27 and 28 being provided for this purpose.

The device 13 comprises an electric relay having a winding 14, whereby an armature 15, pivoted at 16, is attracted whenever a current flows through 14. When so attracted, the armature closes a contact at 17, as shown. This relay is interposed in series in the battery circuit so that whenever the battery 20 is being charged, the charging current will flow through 14 and hold contact 17 closed.

The operation of the system is as follows. Upon inserting and operating the proper key in switch 21 in the usual manner, the ignition circuit will be completed except for the open contacts at 4, 7 and 17. Consequently no current can flow in the ignition circuit until one or the other of these contacts is closed. However, upon actuating the starting means or the crank, a partial vacuum is at once formed in the manifold 23, and as a result is communicated through tube 10 to the casing 1, whereupon the atmospheric pressure will at once push in the diaphragm 3, and thereby close the contacts 4, 7. This completes the ignition circuit, and upon further cranking of the engine, it will start in the usual way. As soon as the engine attains sufficient speed to cause generator 19 to charge battery 20, the current in 14 will close contact 17 so that now the ignition circuit is completed in two possible ways, namely contacts 4, 7 and 17. If now the throttle be opened very widely, the vacuum in manifold 23 may become too poor to retain contacts 4, 7 closed, but at such times

the engine is revolving very rapidly, consequently generator 19 is charging battery 20 and holding contact 17 closed, hence the ignition circuit remains completed even though contacts 4, 7 separate. On the other hand, when the throttle is closed, the vacuum is sufficient to hold contacts 4, 7 closed even though the engine speed drops below that necessary to close contact 17.

If now, the engine stops, the contact 17 immediately opens, and the contacts 4, 7 will separate also as soon as atmospheric pressure is restored in the casing 1 through tube 10. The result is that the ignition circuit is automatically opened immediately after the engine stops.

While I have described devices 13 and 26 as two separate means, it is evident that they may be combined into a single instrument, by fastening an armature corresponding to 15 directly to the diaphragm 3 and placing the electromagnetic windings 14 inside casing 1 so that either a vacuum in the said casing 1 or a current in the enclosed windings 14 will hold contacts 4, 7 together. Such modification is in fact the preferred form of the device, but is described last for the reason that it is easier understood after the elements thereof have been described.

Referring now to Figures 1, 2 and 4, there is shown a vacuum chamber 29 formed as a cylindrical bore in a block of insulating material 30. A diaphragm 31 is held over said chamber 29 by means of screws 32 and ring 33, and a protective cover 34 may also be provided if preferred. A spring 35 is secured to block 30 by means of screw 36 and binding post 37. A stud 38 is secured to the diaphragm as shown, and passes through a hole 39 in the spring 35, the desired adjustment and proper tension being secured by nuts 40. A contact comprising a screw 41 threaded through the spring 35 and secured by lock nut 42, cooperates with a fixed contact 51 secured to the block 30 by screw 43 and binding post 44 as shown. The device so far described corresponds in general structure and function with the device 26 of Figures 3 and 5. An electromagnet 45 is seated in a bore 46 of the block 30 and the terminals of its windings are connected to binding posts 47 and 48. An armature 49 is secured to the spring 35 and cooperates with the electromagnet. This corresponds to the device 13 of Figure 5. A switch 50 pivoted under screw 36 cooperates with contact strip 51 to control the circuit manually. A check-valve 52 controls tube 10.

In operation this device will be connected to the engine 24 as shown in Figure 4. The tube 10 leads to manifold 23 as before, and the electromagnet 45 is placed in the circuit between generator 19 and storage battery 20 as before. Upon producing a vacuum in chamber 29 or a current in electromagnet 45, or both, the spring 35 will be deflected to bring screw 41 into contact with element 51 thereby completing the ignition circuit. The action will then be exactly the same as in Figure 5. In case trouble arises due to any cause, and prevents normal operation of the controller, switch 50 may be actuated manually to short-circuit the contact maker and permit operation of the engine 24 in an emergency.

It will be seen that if an automobile is equipped with my invention, it will be impossible to cause the battery to be run down by leaving the ignition key turned on while the engine is at rest even though the distributor breaker contact happens to be closed, yet the normal starting and operation of the engine are not interfered with.

The check valve 52 is designed to open when a vacuum exists in the manifold, but to close automatically if the engine backfires, thus preventing premature release of the diaphragm 31 should such condition arise. The check valve will be of any ordinary commercial type, and will usually be leaky enough to allow atmospheric pressure to be restored in the chamber 29 soon after the engine stops, and if not, an artificial leak may be produced by slight mutilation of the valve or its seat to cause this desired action.

Having now described a preferred form of my invention, I claim:—

1. An ignition controlling device for internal combustion engines comprising a circuit closer actuated by and in response to the vacuum in the intake manifold of the engine, said circuit closer including a block of insulating material having a chamber formed therein, a diaphragm closing said chamber, a switch actuated by said diaphragm, means for adjustably securing the switch to the diaphragm, a conduit for connecting the chamber to the said intake manifold, and a check valve in said conduit, said check valve being slightly leaky.

2. An ignition controlling device for internal combustion engines comprising a circuit closer actuated by and in response to the vacuum in the intake manifold of the engine, said circuit closer including a single block of material having therein a bore forming a chamber, a diaphragm closing said chamber, a switch actuated by said diaphragm, means for adjustably securing the switch to the diaphragm, a conduit for connecting the chamber to the said intake manifold, said block having a second bore entirely separate from the first-named bore, and an electro-magnetic relay also controlling said circuit, and mounted within said second bore.

3. A block of insulating material having two entirely separated bores formed therein, each being closed at one end; a flexible diaphragm closing the other end of one of said

bores; a conduit communicating with the interior of said bore and adapted to be connected to the intake manifold of an internal combustion engine; an electrical circuit closer mechanically connected to, and operated by, said diaphragm; means for adjusting the circuit closer with respect to the diaphragm; an armature carried by said circuit closer and an electromagnet located in the other bore and cooperating with said armature, to operate the said circuit closer independently of the diaphragm.

In testimony whereof I affix my signature.

JOHN A. FORSBERG.