2 Sheets—Sheet 1.

W. C. NELSON.

WIND-MILL.

No. 169,724. Patented Nov. 9, 1875.

Fig. 1

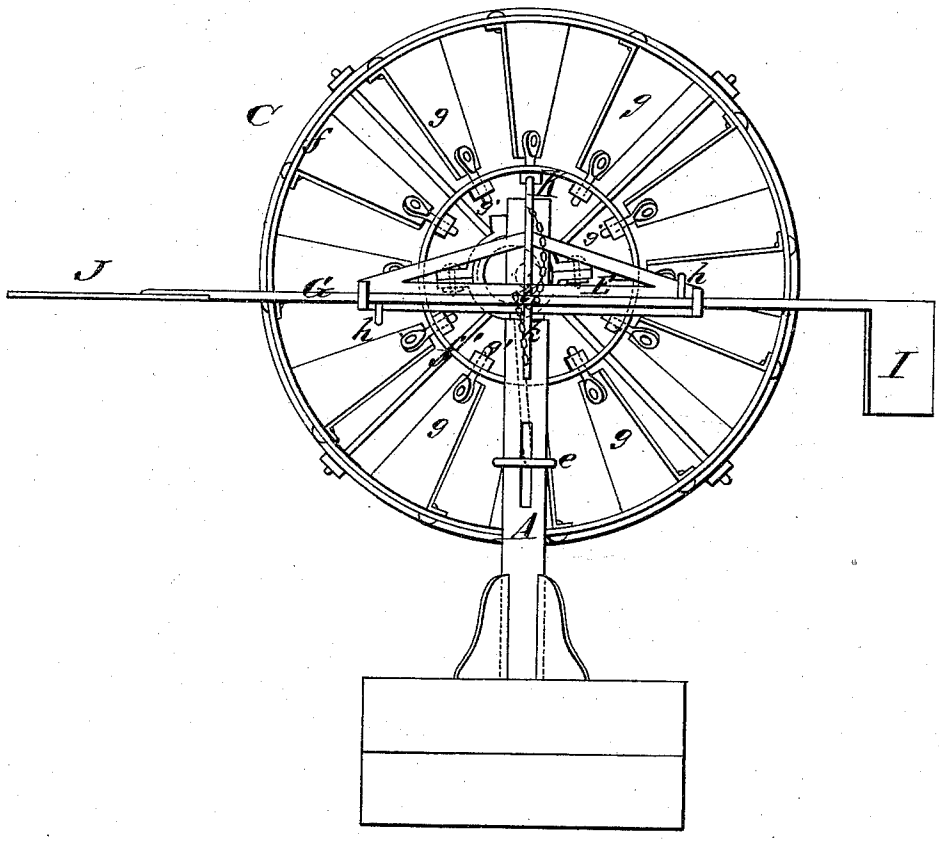

Fig. 2

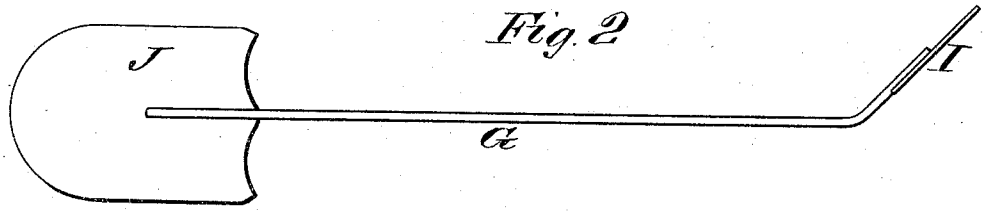

WITNESSES

Villette Anderson.

B. F. Morse

INVENTOR

William C. Nelson

Chipman & Fraser

ATTORNEYS

N. PETERS, PHOTO-LITHOGRAPHER, WASHINGTON, D. C.

2 Sheets—Sheet 2.

W. C. NELSON.

WIND-MILL.

No. 169,724. Patented Nov. 9, 1875.

Fig. 3.

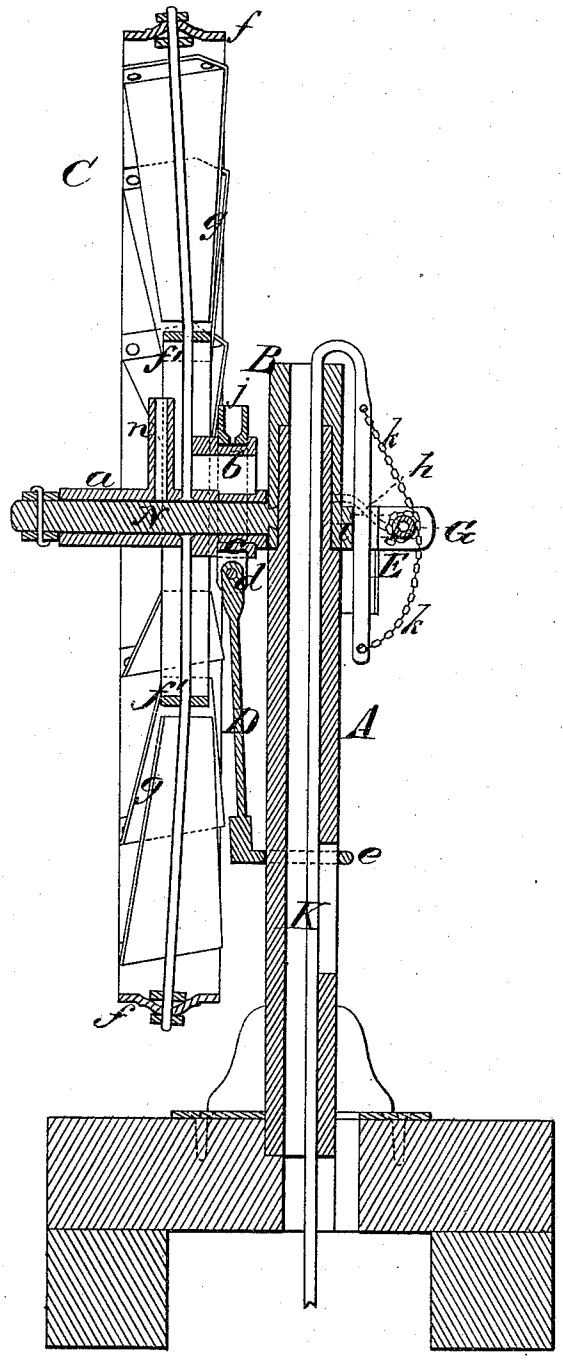

WITNESSES

Villette Anderson

B. H. Morse

INVENTOR

William C. Nelson

Chipman Fisher & Co

ATTORNEYS

N. PETERS, PHOTO-LITHOGRAPHER, WASHINGTON, D. C.

UNITED STATES PATENT OFFICE.

WILLIAM C. NELSON, OF SACRAMENTO, CALIFORNIA.

IMPROVEMENT IN WINDMILLS.

Specification forming part of Letters Patent No. **169,724**, dated November 9, 1875; application filed July 24, 1875.

To all whom it may concern:

Be it known that I, WILLIAM CLARK NELSON, of Sacramento city, in the county of Sacramento and State of California, have invented a new and valuable Improvement in Windmills; and I do hereby declare that the following is a full, clear, and exact description of the construction and operation of the same, reference being had to the annexed drawings, making a part of this specification, and to the letters and figures of reference marked thereon.

Figure 1 of the drawing is a representation of a front view of my windmill, and Fig. 2 is a detail view thereof. Fig. 3 is a vertical sectional view of the same.

This invention has relation to the windmill for which Letters Patent of the United States were granted to me on the 15th day of December, 1857.

My object is to improve said windmill by the employment of a hollow rod, which is free to oscillate in bearings, and which carries on one end a rudder-vane, and on the other end an oblique wind-vane, in combination with a weighted rod, or a chain, and a hollow post, as will be hereinafter explained.

Another object is to employ a wind-vane which is set at an angle to the vane-rod, for the purpose of presenting the flat surface of said wind-vane to the wind at all times; also, to roll the vane-rod at proper times, and to hold it in position as long as necessary, for the purpose of regulating the position of the wheel with respect to the direction of the wind, as will be hereinafter explained.

Another object is to attach the upper end of the pitman-rod to the yoke of the eccentric on the wheel-shaft by means of a joint, for the purpose of preventing binding of said rod or eccentric, or the ring on the lower end of the rod.

In the annexed drawings, A designates an upright tubular post, on the upper end of which is a revolving tubular cap, B, to which is secured a horizontal shaft, N, that receives the hub *a* of the wind-wheel C. On the rear end of the hub *a* an eccentric, *b*, is keyed, which is embraced by a yoke, *c*, to which a pitman-rod, D, is attached by a pivot-joint, *d*. The lower end of the pitman-rod has a ring, *e*, secured to it, which encircles loosely the hollow post A, and receives vertical motion when the wheel C rotates. A pump-rod, or any other device, will be attached to the ring *e*, and this ring is prevented from binding by the pivot-joint *d*. Wheel C is constructed with a rim, *f*, which is corrugated transversely, for the purpose of obtaining strength and stiffness, and at the same time lightness. Inside of this corrugated rim *f*, and concentric with the hub *a*, is a ring, *f'*, which, with the said rim, I secure to radial spokes fixed, equidistant from each other, into the hub *a*. *g g* are the wind-blades, which are properly feathered and riveted to the rim. The inner ends of the blades *g* have screw-threaded stems *g'* secured to them, which pass through the ring *f'* and receive nuts on them.

It is by means of the nuts and stems that I am able to tighten the blades at pleasure. I will here state that the blades are made of thin sheet metal, and are, consequently, very light.

G designates the vane-shaft, which is free to oscillate in bearings formed on a bracket, E, which latter is rigidly secured to the tubular cap B in a horizontal position. The oscillation of the shaft G is limited to a quarter of a revolution by two stop-pins, *h h*, striking against the bracket E. Shaft G is hollow, for the purpose of securing lightness, and on one end of this tubular shaft a broad rudder-vane, J, is secured. The opposite end of shaft G is bent toward the wheel C at an obtuse angle, and to this bent portion a wind-blade, I, is secured by one of its edges, which blade, when acted on by the wind, will turn the shaft G, and cause the rudder-vane to be acted on more or less by the wind, for the purpose of "edging" the wheel C to the wind.

To prevent a comparatively light breeze from turning the wheel out of the wind I employ the following contrivance: K is a rod, which passes through the post A, and far enough below the same to allow of weights being attached to it. The upper end of the rod K is bent over the upper end of the cap B, and carried down between guides *i* below the shaft G. A chain, *k*, is wound once around the shaft G, and attached to a pin fixed therein. One end of chain *k* is attached to the rod K above shaft G, and the other end of this chain is attached to rod K below said shaft.

By these means weights attached to rod K will operate to hold down the wind-blade I.

The rod K may be omitted, and the chain *k* used alone, in which case this chain will pass over a pulley at the upper end of cap *a*, and thence down through the post A.

The yoke and eccentric will be lubricated by pouring oil into cup *j*, and shaft N will be supplied with oil through a tube, *n*.

What I claim as new, and desire to secure by Letters Patent, is—

1. The hollow rod G, carrying the vane J and wind-blade I, bent as described, in combination with stop-pins *h h*, chain *k*, and rod K, the latter passing through hollow cap *a* and hollow shaft A, for the purpose described.

2. The pitman-rod D, having a ring, *e*, which encircles the post A, and pivoted at *d* to the yoke *c* of eccentric *b*, for the purpose set forth.

3. The blades *g*, riveted to rim *f*, and secured to ring *f'* by means of screw-stems *g'* and tightening-nuts, for the purpose set forth.

In testimony that I claim the above I have hereunto subscribed my name in the presence of two witnesses.

WILLIAM CLARK NELSON.

Witnesses:
J. N. YOUNG,
W. F. HUNTOON.