# United States Patent [19]

**Sekiguchi et al.**

[11] **Patent Number: Des. 287,490**

[45] **Date of Patent: ** Dec. 30, 1986**


[54] **HANDSET AND STAND TELEPHONE UNIT**


[75] Inventors: **Akira Sekiguchi**, Tokyo; **Hideaki Kodama**, Sagamihara, both of Japan

[73] Assignee: **Iwatsu Electric Co., Ltd.**, Tokyo, Japan



[**] Term: **14 Years**

[21] Appl. No.: **679,122**

[22] Filed: **Dec. 6, 1984**

[30] **Foreign Application Priority Data**

Aug. 28, 1984 [JP] Japan ..... 59-35857
Aug. 28, 1984 [JP] Japan ..... 59-35858
Aug. 28, 1984 [JP] Japan ..... 59-35859

[52] **U.S. Cl.** ..... **D14/53**; D14/57; D14/62; D14/63; D14/58

[58] **Field of Search** ..... D14/52, 53, 56, 58, D14/62, 63; 179/179, 106 R, 100 D, 100 C, 100 L, 101, 102, 103



[56] **References Cited**

U.S. PATENT DOCUMENTS

| | | | |
|---|---|---|---|
| D. 254,436 | 3/1980 | Bakal | D14/53 |
| D. 260,643 | 9/1981 | Foggia et al. | D14/60 |
| D. 274,515 | 7/1984 | Kraemen | D14/53 |
| D. 274,959 | 8/1984 | Glembocki et al. | D6/555 |
| D. 276,338 | 11/1984 | Pardo | D14/59 |
| D. 282,066 | 1/1986 | Menei et al. | D14/62 |
| D. 282,545 | 2/1986 | Inagi et al. | D14/62 |
| D. 283,507 | 4/1986 | Van Gillueve | D14/62 |
| 4,150,257 | 4/1979 | Fenton et al. | 179/18 BE |
| 4,296,282 | 10/1981 | O'Neil et al. | 179/99 LS |
| 4,375,584 | 3/1983 | Mazumdan et al. | 179/100 D |



*Primary Examiner*—Wallace R. Burke
*Assistant Examiner*—Horace B. Fay
*Attorney, Agent, or Firm*—Oblon, Fisher, Spivak, McClelland & Maier


[57] **CLAIM**

The ornamental design for a handset and stand telephone unit, as shown and described.

**DESCRIPTION**

FIG. **1** is a top plan view of a handset and stand telephone unit, showing our new design;
FIG. **2** is a front elevational view thereof;
FIG. **3** is a bottom plan view thereof;
FIG. **4** is a rear elevational view thereof;
FIG. **5** is a side elevational view thereof taken from the right side of FIG. **1;**
FIG. **6** is a side elevational view thereof taken from the left side of FIG. **1;**
FIG. **7** is a front, top and right side perspective view thereof with the handset cradled in the stand; and
FIG. **8** is a front, bottom, and left side associated perspective view of the handset, positioned above the stand, and a front, top and right side perspective view of the stand.

The broken line showing of keyboard garniture, which includes pushbuttons, light indicators, index, etc., in FIGS. **1, 2, 5, 6, 7** and **8** is for illustrative purposes only and forms no part of the claimed design.

In FIGS. **1, 3, 5, 6, 7** and **8,** portions of the cord are shown in broken lines for facility of illustration and clarity of representation.

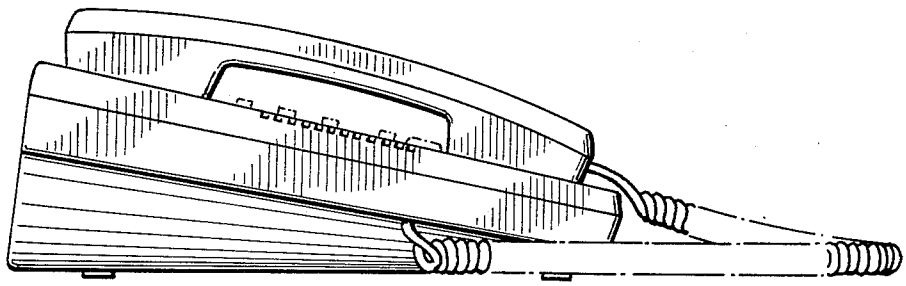

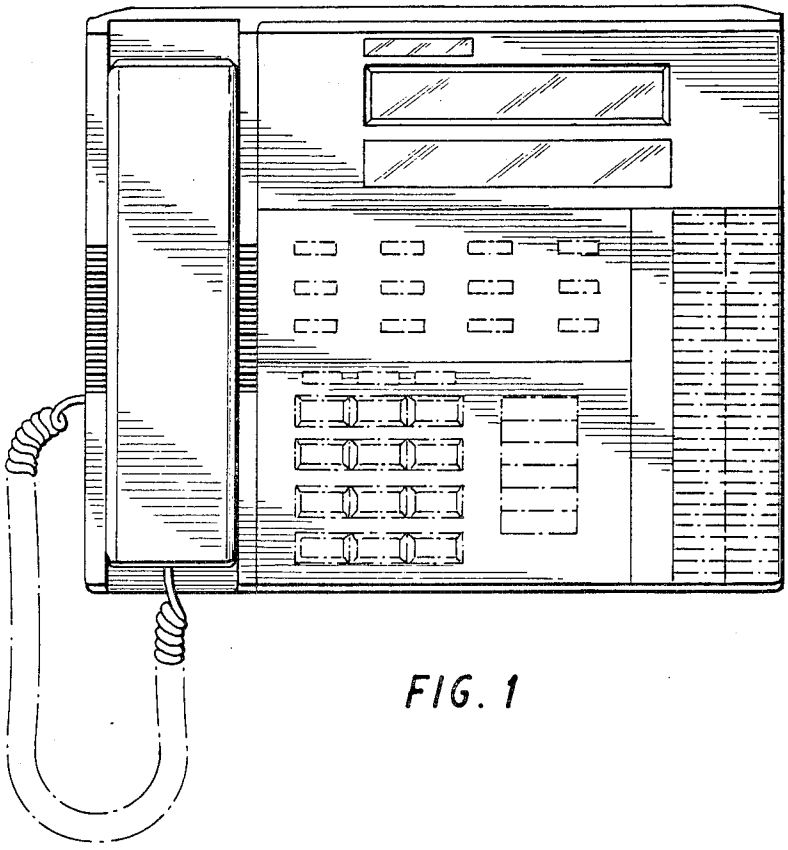

FIG. 1

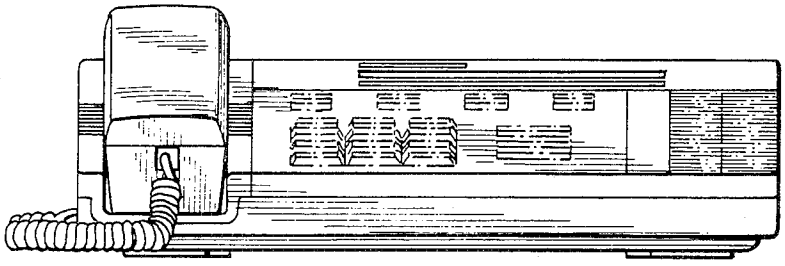

FIG. 2

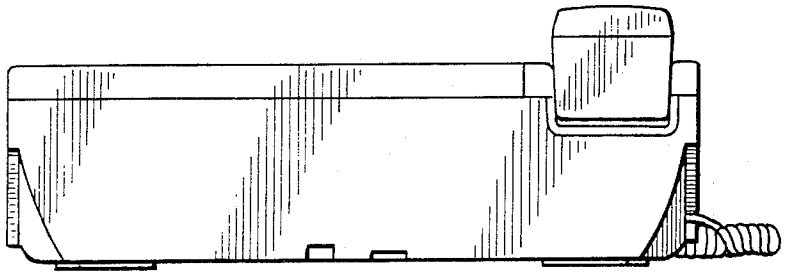

FIG. 4

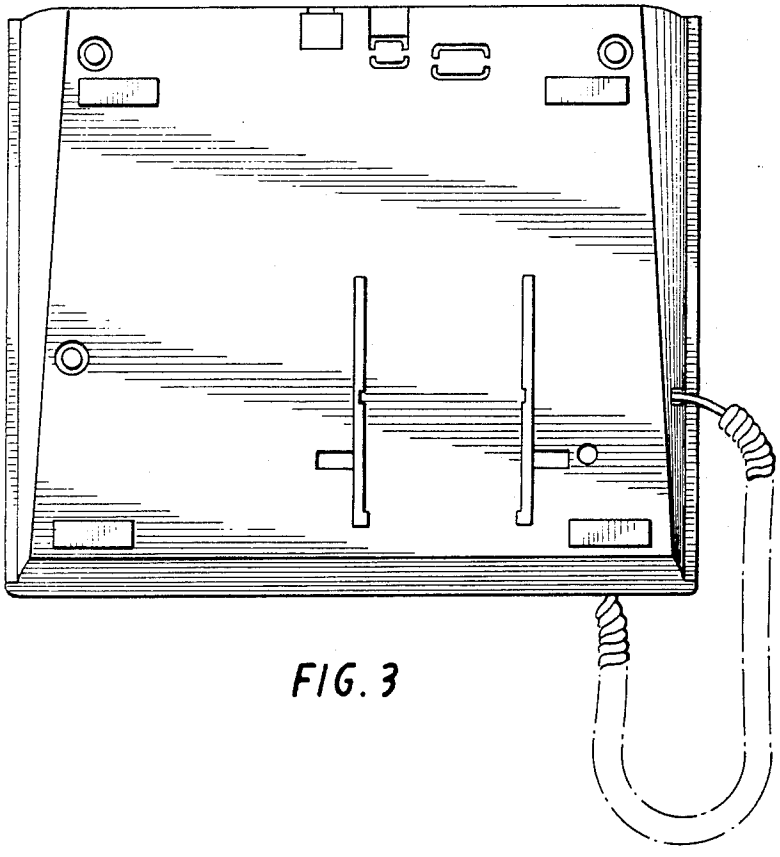

FIG. 3

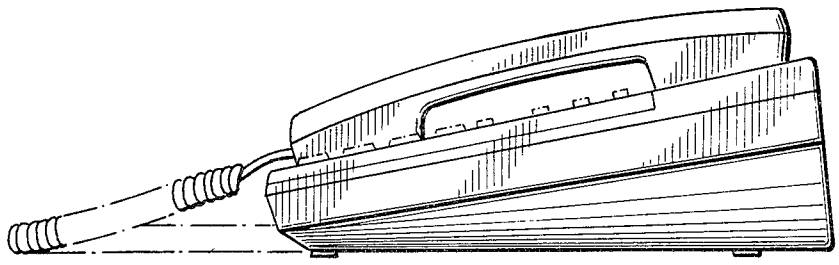

FIG. 5

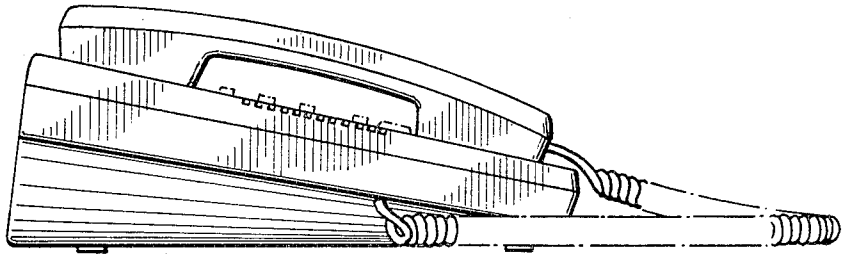

FIG. 6

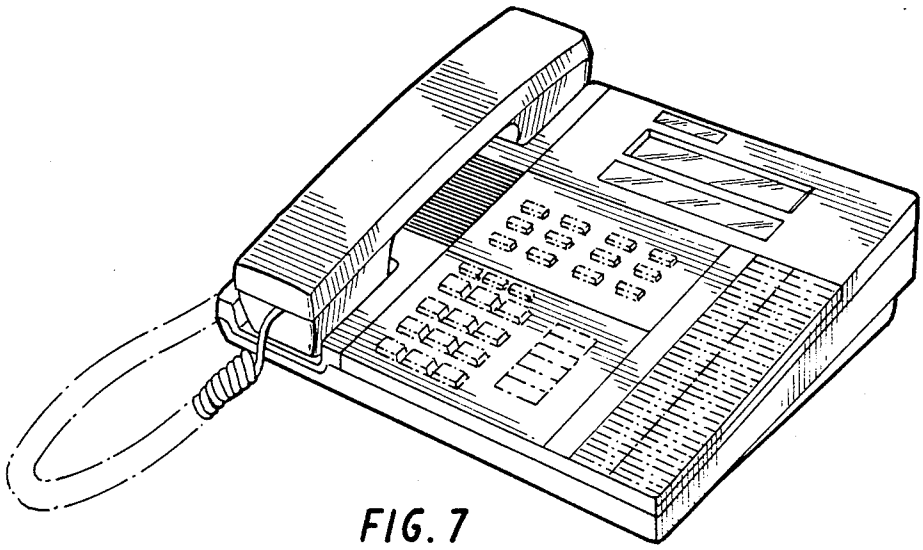

FIG. 7

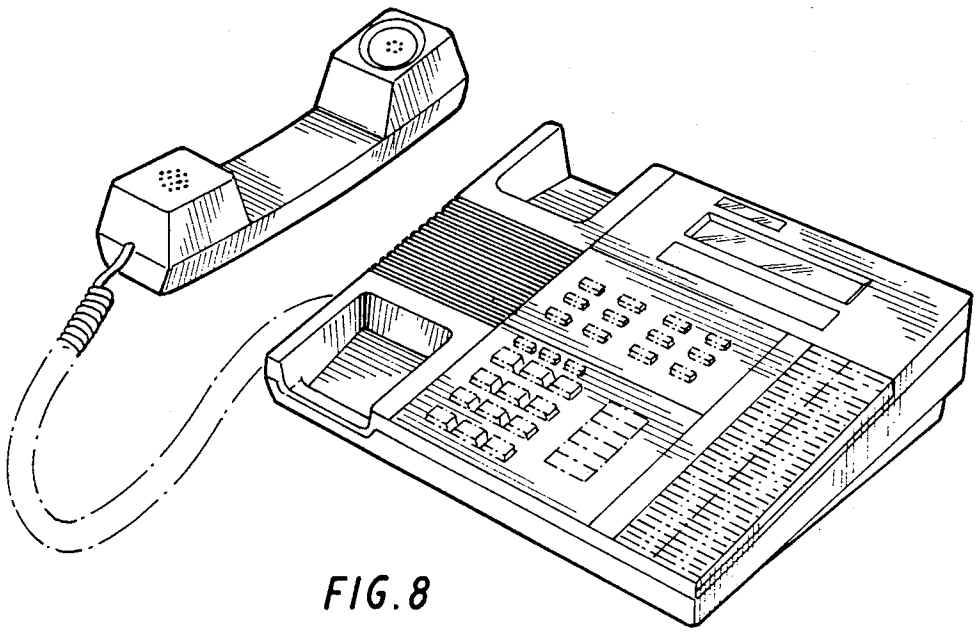

FIG. 8

UNITED STATES PATENT AND TRADEMARK OFFICE

# CERTIFICATE OF CORRECTION

PATENT NO. : D287,490

DATED : 12/30/86

INVENTOR(S) : AKIRA SEKIGUCHI ET AL

It is certified that error appears in the above-identified patent and that said Letters Patent is hereby corrected as shown below:

Title page:

In the Foreign Application Priority Data, please change the following Serial Numbers "59-35857, 59-35858, 59-35859" to --59-35860, 59-35861--.

Signed and Sealed this

Fifteenth Day of November, 1988

*Attest:*

*Attesting Officer*

DONALD J. QUIGG

*Commissioner of Patents and Trademarks*