(12) INTERNATIONAL APPLICATION PUBLISHED UNDER THE PATENT COOPERATION TREATY (PCT)

(19) World Intellectual Property Organization
International Bureau

(43) International Publication Date
24 December 2014 (24.12.2014)

WIPO | PCT

(10) International Publication Number
WO 2014/204690 A1

(51) International Patent Classification:
F16L 11/02 (2006.01) *F16L 11/127* (2006.01)
F16L 11/08 (2006.01)

(21) International Application Number:
PCT/US2014/041476

(22) International Filing Date:
9 June 2014 (09.06.2014)

(25) Filing Language: English

(26) Publication Language: English

(30) Priority Data:
13/922,531 20 June 2013 (20.06.2013) US

(71) Applicant: **EATON CORPORATION** [US/US]; Eaton Center, 1111 Superior Avenue, Cleveland, OH 44114 (US).

(72) Inventors: **GAUCKLER, Andreas, Manfred**; 775 Westcliff Drive, Lafayette, CO 80026 (US). **STATLER, III, Richard, Lowell**; 4570 Cathay Court, Denver, CO 80249 (US).

(74) Agents: **JOHNSON, Brent, P.** et al.; Sheridan Ross P.C., 1560 Broadway, Suite 1200, Denver, CO 80202 (US).

(81) Designated States *(unless otherwise indicated, for every kind of national protection available)*: AE, AG, AL, AM, AO, AT, AU, AZ, BA, BB, BG, BH, BN, BR, BW, BY, BZ, CA, CH, CL, CN, CO, CR, CU, CZ, DE, DK, DM, DO, DZ, EC, EE, EG, ES, FI, GB, GD, GE, GH, GM, GT, HN, HR, HU, ID, IL, IN, IR, IS, JP, KE, KG, KN, KP, KR, KZ, LA, LC, LK, LR, LS, LT, LU, LY, MA, MD, ME, MG, MK, MN, MW, MX, MY, MZ, NA, NG, NI, NO, NZ, OM, PA, PE, PG, PH, PL, PT, QA, RO, RS, RU, RW, SA, SC, SD, SE, SG, SK, SL, SM, ST, SV, SY, TH, TJ, TM, TN, TR, TT, TZ, UA, UG, US, UZ, VC, VN, ZA, ZM, ZW.

(84) Designated States *(unless otherwise indicated, for every kind of regional protection available)*: ARIPO (BW, GH, GM, KE, LR, LS, MW, MZ, NA, RW, SD, SL, SZ, TZ, UG, ZM, ZW), Eurasian (AM, AZ, BY, KG, KZ, RU, TJ, TM), European (AL, AT, BE, BG, CH, CY, CZ, DE, DK, EE, ES, FI, FR, GB, GR, HR, HU, IE, IS, IT, LT, LU, LV, MC, MK, MT, NL, NO, PL, PT, RO, RS, SE, SI, SK, SM, TR), OAPI (BF, BJ, CF, CG, CI, CM, GA, GN, GQ, GW, KM, ML, MR, NE, SN, TD, TG).

Published:

— *with international search report (Art. 21(3))*

(54) Title: CONDUCTIVE MESH FOR COMPOSITE TUBE FOR FLUID DELIVERY SYSTEM

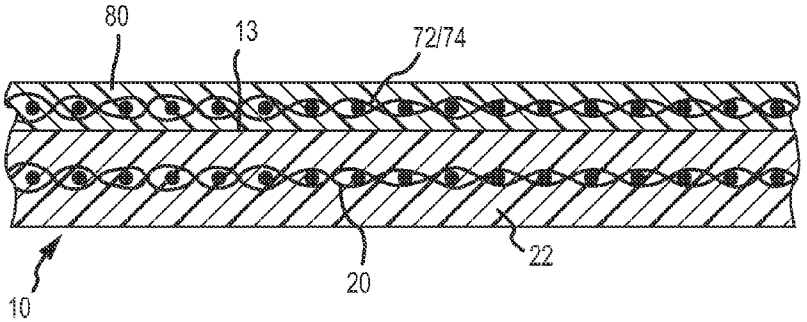

FIG.8

(57) Abstract: An electrically tuned composite tube comprises a tubular arrangement of a knitted reinforcement layer. Selected knitted patterns provide desired density or spacing between fibers of the reinforcement layer. A mesh element is also incorporated in the tube construction to precisely control resistivity and conductivity performance characteristics by selecting the mesh element from one or more conductive or non-conductive fibers or wires. The mesh element may include a tubular arrangement of fiber or wire provided in a knitted pattern or a woven pattern. A matrix material is applied over the knitted reinforcement layer and mesh element, and is allowed to cure for a single matrix layer. Alternatively, a first tube can be constructed with only the knitted reinforcement layer and matrix material, and the mesh element is added afterwards with another layer of matrix material applied over the exterior surface of the first tube.

WO 2014/204690 A1

CONDUCTIVE MESH FOR COMPOSITE TUBE FOR FLUID DELIVERY SYSTEM

CROSS REFERENCE TO RELATED APPLICATIONS

This application is a continuation-in-part application of co-pending application serial number 12/983,069 filed on 31 December, 2010 and entitled: Composite Tube For Fluid Delivery System, of which said application is hereby incorporated by reference in its entirety.

FIELD OF THE INVENTION

The present invention relates to a composite tube used in fluid delivery systems, and more particularly, to a composite tube incorporating a selected conductive or non-conductive mesh element to tune the conductivity of the composite tube, and the mesh element and composite tube combination being especially adapted for use in fluid delivery of fuel in vehicles or aircraft.

BACKGROUND OF THE INVENTION

Polymer based compositions are becoming increasingly used in a variety of different technological applications to include vehicle and aerospace applications. Polymer based composites are used in not only structural applications, but also in construction of system components in order to control the electrical conductivity and resistivity of the components. Polymers widely vary in their ability to dissipate static charges and to prevent the composite material from acting as a mere conductor of electrical current.

Polymeric composites with both conductive and non-conductive properties can be chosen by incremental addition of selected materials such as carbon black, carbon fiber, metallic fibers and powders, as well as selecting inherently conductive polymeric compositions such as polyaniline. Further, it is known that by varying the amount of conductive or resistive particles added to the composition, some incremental control can be obtained for establishing the conductive or resistive properties of the material.

Fuel lines, particularly those used in aircraft, should preferably have the ability to accommodate a wide range of electrical performance requirements depending upon the location of the fuel line, the type of fuel line and other factors. It is desirable to have fuel lines that are resistant enough to prevent them from acting as conductors of electrical current such as caused by a lightening strike, yet the fuel lines should be conductive

enough to prevent static charge build up that could result in an electrical arc creating a spark within the fuel line.

Various efforts have been made to isolate fuel lines to ensure the fuel lines maintain the desired electrical properties; however, traditional fuel lines are unable to accommodate wide electrical performance requirements when comparing an event such as a lightning strike versus slow but incremental static buildup.

One example of a reference that discloses fuel lines with controlled resistivity includes the International Publication Number WO2009/087372. This reference describes a glass reinforced composite pipe having an electrically nonconductive polymeric resin matrix and an electrically nonconductive reinforcement component such as glass fiber. The composition further includes a selected dispersion of an electrically conductive particulate filler, such as carbon black in which the resistivity of the outer portion of the composite pipe is preferably set between 50 K-ohms per meter length and 4 M-ohms per meter length.

Another reference that addresses electrical conductivity problems associated with fuel carrying pipes or tubes is the European Patent Application Publication No. 0028310. This reference discloses a filament reinforced plastic article having a fluid impermeable wall with a relatively low surface resistivity to prevent build up of electrostatic charge. The article includes overlapping bands of filament coated with a plastic material. A minor portion of the filament in some of the bands is electrically conductive by use of electrically conductive filaments that may be distributed throughout the wall of the article.

Another example of a fuel pipe or tube addressing desired electrical properties is the U.S. Patent Application Publication No. U.S. 2010/011,694. This reference describes ducting comprising at least one multi-layer pipe having respective inner and outer layers made of a composite plastic material, and reinforced by an electrically conductive reinforcement layer. An intermediate layer is provided for stiffening of the pipe when flexed and/or to insulate the pipe. Each of the inner and outer layers has at least one winding with contiguous turns of a material made of a composite thermoplastic. The pipe is able to discharge electrostatic build up through its inner layer, and electrical charges due to lightening are deflected away from the pipe through its outer layer.

While these references may be adequate for their intended purposes, there is still a need to provide fluid conveying tubes or pipes that are economical to manufacture, and may accommodate wide ranges of electrical specifications both for static discharge and lightening protection. Further, there is need to provide a tube or pipe construction that can

be shaped and sized for many different applications. For example, there is a need to provide the capability of manufacturing fuel lines for aircraft in which the tubes can be easily sized and shaped to fit within constrained spaces.

One particular problem associated with composite tubing is delamination that can occur between joined sections of tubes or layers among tubes. The most common manufacturing practice is to simply overlap abutting edges of tube sections to be joined. Although initially these overlapping edges may provide an adequate structural connection, vibration and chemical degradation by contact of the fuel with the composite material eventually results in some degree of delamination. Particularly in pipe runs that must follow a torturous path, there may be multiple sections of tubes/pipes that are joined. In these cases, it may be impractical or impossible to use mechanical couplers at each junction due to weight and size constraints. Therefore, there is also a need to provide a composite tube construction in which long continuous pipe runs having complex shapes are created without a concern for delamination between abutting tube sections.

Another limitation associated with composite tubes that may incorporate selected conductive or non-conductive properties is that changing the conductive properties of differing sets of tubes within a fluid delivery system requires reformulation for each set of tubes, since the practice is to add or remove conductive or resistive particles to the compositions. While some incremental control may be achieved to control fluid delivery system conductivity as a whole, it becomes prohibitively complex and expensive to change formulations for many different sections of tubing and fittings within a particular fluid delivery system. Accordingly, incremental control across a single section of tubing, or within different sections of tubing within a system becomes impractical. Therefore, there is also a need to provide an ability to electrically tune distinct tubing and fittings components within a fluid delivery system without having to change formulations.

Although there have been advances made with respect to the chemical aspects of composite materials, most present day aircraft are still constructed with metallic tubing (such as aluminum, stainless steel, or titanium). In order to electrically tune these metallic tubes, various static discharge and electrical isolators are required, which add cost and weight to the aircraft.

SUMMARY OF THE INVENTION

In accordance with the invention, a composite tube is provided that is especially adapted for use in fluid delivery systems containing fuel or other corrosive chemical

formulations. The invention further comprises a method of manufacturing the composite tube as well as a composite tube system in which a plurality of composite tubes are connected for delivery of a fluid within a larger assembly, such as a vehicle or aircraft.

The composite tube comprises a tubular arrangement of fiber created by a knitted fibrous pattern characterized by a plurality of interlocking loops. The term "knitted fiber" is defined as group of fibers that are interconnected by a plurality of consecutive loops or stitches. As each row of loops is formed, a new loop is pulled through an existing loop. Selected knitted patterns may be formed to provide the desired density or spacing between the fibers. The meandering path or course of the fibers can be adjusted in terms of spacing of the consecutive loops to achieve the desired density of fibers per unit area. As distinguished from weaving in which threads or fiber extend linearly and substantially more parallel in a lengthwise or crosswise direction, the knitted pattern of the present invention comprises fibers that follow meandering paths to form loops. The loops may be symmetric or irregular shaped. Accordingly, the course or paths of the knitted fibers have multiple directional changes to include at least one directional change of approximately 180 degrees in order to form a loop. The knitted pattern has an inherent bias or stretch/contracting capability that enables a user to further adjust the density or spacing of the fibers by selectively stretching the fibers to a desired shape. A particular knitted pattern can be chosen to also modify the desired spacing and density of the knitted fibers. Examples of different knitted patterns could include plain or pearl stitching. Other types of knitting may be used to further adjust knitted pattern parameters such as fiber density. These other types of knitting may include warp knitting, weft knitting and plaited stitching.

A number of features of the composite tube can be precisely controlled with the use of a knitted pattern. For example, different types of fiber can be knitted to adjust the conductivity or resistivity of the composite tube. Monitoring devices can also be incorporated in the knitted pattern, such as various strain gauges or other sensors.

The particular geometry of the composite tube can be made in an infinite number of shapes based on the ability to knit tubular sections in desired shapes. Not only can the diameter of the tube be changed, but also turns or bends and other features can be created. Intersecting sections of tubes can be attached by stitching the abutting faces to one another. Thus, the knitted pattern of fibers can be considered a continuous integral support structure which eliminates the requirement for overlapping sections at tube intersection points, thereby avoiding delamination between the layers of material.

A circular knitting machine can be used to create the tubular knitted patterns. One example of a circular knitting machine comprises a cylinder rotatable in one or both directions. A series of circumferentially spaced needle slots are located on a peripheral surface. A series of individually movable knitting needles are reciprocated in the associated needle slots. A series of jacks are arranged below the associated needles in an end to end relationship for reciprocating with the associated needles in the needle slots. Each of the jacks has a butt extending out of the associated needle slot. A camming mechanism includes a number of raising cams arranged to define a cam track through which each butt passes when the cylinder is rotating. The knitting can be affected whenever each butt of the jack comes in contact with the raising cams, and is thereby moved along with the associated needle upwardly in the associated needle slot. This machine is described in the U.S. Patent No. 3,971,233, and this reference is hereby incorporated by reference for the purpose of disclosing a circular knitting machine capable of producing a tubular configuration of a knitted pattern.

The use of a conventional circular knitting machine such as used for fabrics is capable of creating the tubular arrangement of fiber in the present invention. The fiber may include materials such as Kevlar®, carbon fiber, glass, and combinations thereof. The tubular knitted pattern provides for variable electrical, mechanical, and geometrical options that are difficult if not impossible to achieve with conventional composite tube manufacturing processes.

Once the knitted pattern is completed, the composite tube is then formed by a vacuum bag molding process. In general, a vacuum bag molding process involves a two sided mold that shapes both the internal and external surfaces of an object. Typically, the interior mold or mandrel is rigid, and the exterior mold is a flexible membrane or vacuum bag. In the present invention, in lieu of a rigid inner core or mandrel, an inflatable bladder is placed within the knitted pattern to create internal pressure. Preferably, the inflatable bladder is provided in a twisted, helical pattern that ensures the inflatable bladder is capable of applying even internal pressure against the knitted pattern that may have various turns or changes in diameter. The twisted helical pattern enables the bladder to be inflated beyond just a cylindrical shape. The bladder has excess material that can fill larger spaces or may easily fit within smaller areas thereby accommodating different shaped tubes to be formed. Once the inflatable tube is in place, a polymeric matrix is applied over the knitted pattern. The matrix material flows between the gaps in the knitted pattern and the matrix material is provided in sufficient quantity to create a desired

thickness based on tube specifications. Preferably, the matrix material is the combination of a composite resin and epoxy formulated with the desired properties for the particular tube application.

Once the matrix is applied, additional layers are placed over the matrix to include a perforated plastic or relief plastic layer, an absorptive layer over the perforated plastic layer, and an external impervious vacuum bag over the absorptive material. A vacuum port is provided for the drawing of a vacuum to remove air, and to thereby provide a compressive force against the matrix layer. The external pressure can be increased by placing the assembly in an autoclave which can increase the differential pressures. The excess matrix material is allowed to flow through the perforated plastic layer and is absorbed within the absorptive layer. The matrix is allowed to cure, and molding materials are then removed leaving a composite tube shell which can be trimmed and finished. Finishing may include painting, part marking, application of decals, etc.

Modular and adjustable external fixturing may be used to hold critical geometry areas on the tube such as neck downs, mount points, and end configurations. This modular/adjustable exterior fixturing can also be used to secure flanges or other hardware, and may be attached to the ends of the tube or other locations on the tube.

By controlling the electrical and mechanical properties of both the fiber material and the matrix material, the desired resistive properties can be achieved. By machining and otherwise finishing the tube, the surface and volumetric resistivity of the product can also be adjusted.

As mentioned with respect to the integral or one piece fiber knitted pattern, delamination is avoided at tube intersection points or other areas where separate tube sections are joined since the matrix material can be applied continuously across these intersection points. A continuously extending tubular fiber in combination with the continuously applied matrix material avoids all laminated seams or overlapping areas.

It is well known that most composite tubes are formed on rigid inner mandrels having limited flexibility. This reduces the available geometries for a tube to be formed because ultimately, the mandrel must be removed from the interior of the tube section. In the present invention, the shape holding feature of a tube design is built into the underlying fiber pattern itself. This method therefore allows for use of a very flexible and collapsible inner mold such as the inflatable bladder. Nevertheless, a vacuum bag molding technique can be used for necessary internal and external compressed molding, while critical exterior features and varied end configurations can be held in place by modular

exterior fixturing. The manufacturing method of the invention therefore allows for extreme variability in creating tube intersections, small turn radii, varied diameters, varied shapes, and also contributes to very low tooling costs. Therefore, it is apparent that the term "tube" or "tubing" of the present invention covers not only circular shaped cross sectional elements, but also a wide range of other hollow shapes in which varied diameters and shapes can be used to complete the entire array of differing fluid conveying elements within a fluid conveying system.

Further, the manufacturing method of the invention allows for the construction of very long pipe runs that traditionally require many laminated seams or junctions attached by couplers. The manufacturing method also allows for electronic integration of various monitoring sensors or heating elements to control temperatures, for example to comply with anti-icing requirements for aircraft. The composite tube of the present invention provides many material advantages to include a non-metallic, a seamless composite that can be formed into an infinite number of rigid shapes, and the composite tube is tunable for fine/incremental variations of electrical and mechanical properties.

In another aspect of the invention, a construction is provided for controlling the composite tube for desired electrical properties including resistivity and conductivity performance characteristics by adding a mesh element or layer made from one or more types of conductive on non-conductive fibers or wires. More specifically, the composite tube is constructed to precisely electrically tune the conductivity of discrete sections of the tube by a mesh element or layer added to the composite tube in which the mesh element or layer may include a tubular arrangement of fiber or wire provided in a knitted pattern, in the same knitted configuration as described with respect to the tubular arrangement of knitted fiber of the reinforcement layer of the composite tube. Alternatively, the mesh element may include a tubular arrangement of fiber or wire provided in a woven pattern or another type of interlocking pattern.

In a first embodiment of the electrically tuned and composite tube, the mesh element or layer is wrapped around or slipped over an existing composite tube, and then the composite tube and mesh element are joined by applying an additional layer of matrix material or a laminate layer, such as by another vacuum molding process.

In another embodiment of the electrically tuned and composite tube, the knitted reinforcement layer and overlying mesh element could be combined in a single vacuum molding process in which matrix material is applied and penetrates between and circumferentially around both the knitted reinforcement layer and overlying mesh element.

The mesh element can be constructed of fibers or wire type material in order to incrementally change the conductive characteristics of the composite tubing over selected lengths of the tubing. For example, one particular run of tubing may require different conductivity requirements, accordingly varying types of mesh materials can be applied over the run of tubing, each of the types of mesh material having the desired conductivity characteristics.

In addition to the mesh element providing incremental and precise control of conductivity, the mesh element also provides additional structural support to the composite tube thereby increasing the overall strength and/or stiffness of the composite tubing.

The mesh element may also include its own electronic sensors for purposes of reporting the electrical status of the electrically tuned composite tubing during use. For example, sensors could be used to monitor the electrical properties of the mesh element to determine the presence of damage or fatigue.

Considering the above described features of the invention, it can therefore be considered in one aspect an electrically tuned composite tube comprising (i) a knitted reinforcement layer comprising a plurality of interlocking loops of fiber formed in a plurality of rows, and said adjacent rows interlocking one another to form a knitted pattern; (ii) a knitted or woven mesh element of selected electrical tuning material placed over a selected length of said knitted reinforcement layer; (iii) a matrix applied over said reinforcement layer and said mesh element, said matrix comprising resin and epoxy constituents, said matrix filling voids between said loops of said reinforcement layer, and between and around both said reinforcement layer and said mesh element, said matrix having an internal surface extending radially inward beyond the reinforcement layer and an external surface extending radially outward beyond the mesh element thereby forming the composite tube of a desired thickness and; (iv) said composite tube being tuned for desired electrical properties including resistivity and conductivity performance characteristics by selecting said mesh element from one or more conductive or non-conductive fibers or wires.

In another aspect of the invention, it can be considered a method of making an electrically tuned composite tube comprising; (i) creating an arrangement of fiber into a knitted pattern forming a reinforcement layer, said knitted pattern comprising a plurality of interlocking loops; (ii) providing a knitted or woven mesh element of selected electrical tuning material and placing said mesh element over a selected length of said reinforcement

layer; (iii) inserting an inflatable bladder within an open space within the reinforcement layer; (iv) inflating the bladder such that pressure is applied by the bladder to interior surfaces of said reinforcement layer thereby holding the reinforcement layer in a pre-determined shape; (v) applying a matrix material over said reinforcement layer and said mesh element; (vi) placing a perforated layer over said matrix, said perforated layer having a plurality of perforations; (vii) applying an absorptive layer over said perforated layer; (viii) applying an external impervious layer over said absorptive layer; (ix) applying a vacuum through a vacuum port formed on the impervious layer resulting in said impervious layer applying a force against said matrix material and in opposition to force provided by the bladder; (x) curing the matrix for a period of time; and (xi) removing the layers from the matrix material and removing the bladder resulting in the formation of the electrically tuned composite tube.

In yet another aspect of the invention, it can be considered an electrically tuned composite tube comprising: (i) a knitted reinforcement layer comprising a plurality of interlocking loops of fiber formed in a plurality of rows, and said adjacent rows interlocking one another to form a knitted pattern; (ii) a first matrix layer applied over said reinforcement layer, said first matrix layer comprising first resin and epoxy constituents, said first matrix layer filling voids between said loops of said reinforcement layer, and between and around said reinforcement layer, said first matrix layer having an internal surface extending radially inward beyond said reinforcement layer and an external surface extending radially outward beyond said reinforcement layer thereby forming a composite tube of a first desired thickness; (iii) a knitted or woven mesh element of selected electrical tuning materials placed over a selected length of said composite tube; (iv) a second matrix layer applied over said composite tube and said mesh element, said second matrix layer comprising second resin and epoxy constituents, said second matrix layer filling voids between said mesh element and an exterior surface of said composite tube, said second matrix layer having an internal surface in intimate contact with said exterior surface of said composite tube, and said second matrix layer having an external surface extending radially outward beyond said mesh element thereby forming an electrically tuned composite tube of a second desired thickness; and (v) wherein said electrically tuned composite tube is tuned for desired electrical properties including resistivity and conductivity performance characteristics by selecting said mesh element from one or more conductive or non-conductive fibers or wires.

Other features and advantages of the present invention will become apparent from the detailed description taken in conjunction with the drawings.

BRIEF DESCRIPTION OF THE DRAWINGS

Fig. 1 is a perspective view of a section of composite tubing formed in accordance with a vacuum bag molding method;

Fig. 2 is a plan view of one example of a knitted pattern usable with the tubular arrangement of fiber of the present invention;

Fig. 3 is a perspective view of a finished composite tube having a plurality of features;

Fig. 3A is a greatly enlarged perspective view illustrating the knitted connection between abutting sections of tubing;

Fig 3B is a greatly enlarged perspective view illustrating the integration of a monitoring feature in the knitted pattern, such as an electronic element;

Fig. 4 is an exploded perspective view of an existing composite tube and a mesh element in the form of a knitted pattern of electrically tuned material to be added to the existing composite tube;

Fig. 5 is a perspective view of the existing composite tube of Fig. 5 and the electrically tuned mesh element fitted over the existing composite tube;

Fig. 6 is a perspective view of another construction for the electrically tuned mesh element in the form of a woven pattern of material;

Fig. 7 is a perspective view of another embodiment, including a knitted reinforcement layer, and an electrically tuned mesh element mounted over the knitted reinforcement layer in which a single application of matrix material is used to complete construction of the electrically tuned composite tubing;

Fig. 8 is an enlarged cross-sectional view illustrating layers of the electrically tuned composite tubing according to the embodiment shown in Figs. 5 or 6 in which an additional layer of matrix material is applied over the existing composite tube;

Fig. 9 is an enlarged cross-sectional view illustrating layers of the electrically tuned composite tubing according to the embodiment shown in Fig. 7 in which a single application of matrix material is used to complete construction of the electrically tuned composite tubing; and

Fig. 10 is another enlarged cross-sectional view of Fig. 9 that adds an electronic component used for monitoring purposes.

DETAILED DESCRIPTION

Referring to Fig. 1, a method of manufacturing the composite tube of the present invention is illustrated. The composite tube 10 is formed by a vacuum bag molding process. For illustrative purposes, the successive layers of material are shown as exposed. First, a spiraled inner bladder 12 is placed within the interior opening of a knitted reinforcement layer 20. The tubular knitted pattern formed for the reinforcement layer 20 is constructed with the previously described knitted pattern having a selected group of fibers formed in a plurality of loops. The inner bladder 12 is inflated through inflation port 14, in order to expand the knitted reinforcement layer 20 to a desired diameter or shape. Additionally, the knitted reinforcement layer 20 is shown as having a bend. The reinforcement layer can be knitted with the bend. This type of knitting to produce a bend could be similar to the formation of a bend in a woven garment, such as the heel portion of a knitted sock or slipper.

Each end of the composite tube section to be formed may have external fixtures 16 secured thereto to stabilize the shape of the composite tube, and to otherwise provide a means by which external hardware may be secured to the tube structure. In the example of Fig. 1, the external fixture 16 on the left side of the diagram includes an opening for holding a piece of hardware such as a flange 34 that may be secured to the composite tube during the vacuum bag molding process. The external fixture can also be used to modify the tube shape, for example, a rigid box shaped fixture placed over and end of the tube can be used to restrict the expansion and form the final product into a tube having a geometrical shaped end with flat sides. In addition to use of fixtures on the ends of the tubes, the fixtures 16 may be placed at intermediate or interior sections of the tube between the ends in order to stabilize the shape of the tube at that intermediate location(s).

Next, a matrix layer 22 is placed over the knitted reinforcement layer 20, the matrix preferably including components of resin and epoxy materials. The matrix material is typically in a liquid form that enables the matrix layer to flow between the gaps in the knitted reinforcement layer 20, and to otherwise fully encapsulate the knitted layer 20. The amount of matrix is applied to set the desired external and internal tube diameters. The matrix may be applied in a number of ways, such as by an atomized spray, or by brushing the matrix layer over the knitted layer.

After the matrix material is applied, a perforated plastic layer 24 is placed over the matrix layer 22. The perforated plastic layer 24 comprises a plurality of perforations 26 as shown.

Next an absorptive layer 28 is placed over the perforated plastic layer 24. Finally, an impermeable vacuum bag 30 is placed over the absorptive layer 28. A vacuum port 32 is formed on the vacuum bag. A vacuum is applied through the vacuum port to remove air between the layers of material, thereby resulting in an external force applied to the matrix layer 22. This external force can be increased as mentioned by placing the assembly in a pressurized chamber such as an autoclave. Excess matrix material is allowed to flow through the perforations 26, and the absorptive layer 28 absorbs a significant portion of the excess matrix material flowing through the perforations.

The composite tube is then allowed to cure, and curing may be accelerated by heating in an oven or autoclave. After curing, the external layers are stripped from the cured and hardened matrix layer. The spiraled inner bladder 12 is deflated, and then removed leaving the composite tube. The tube may then finished by polishing the exposed surfaces and painting, or the tube may be left unfinished. Although the preferred embodiment shows the use of both the absorptive and perforated layers, it shall be understood that the particular vacuum bag molding process chosen may incorporate other layers or may eliminate one or more of these layers based on the particular type of tube section to be created.

Referring to Fig. 2, one example is shown for the knitted reinforcement layer 22. The layer is characterized by one or more sets of fibers and the knitted pattern forming a plurality of interlocking loops. More specifically, Fig. 2 illustrates two sets of fibers 60 and 62, and the fibers knitted in a meandering pattern such that a plurality of loops are formed in successive rows that join at interlocking loop points 64. Fig. 2 provides an example of how different sets of fibers can be used to provide distinct boundaries for changing performance characteristics of the tube while maintaining continuous material integrity without the need to overlap layers of material. For example, the first set of fibers 60 may have greater resistive properties, while the second set of fibers 62 may have greater conductive characteristics. Each set of fibers may include different types of fibers within each set that are also selected to provide the desired electrical or mechanical characteristics, or other characteristics. Therefore, one can appreciate the ability of the knitted reinforcement layer 20 to provide precise specifications for both strength and electrical conductivity/resistivity as a function of the geometry and location.

Referring to Fig. 3, a finished composite tube structure 10 is shown having a number of different features/characteristics. The area of the tube located at the bend 66 represents an area that may have a greater density knit pattern or additional fibers at the

bend to better support the tube at that location, and also fibers knitted in a curvature that provides the bend shape. The knitted material shown at area 66 is covered by the matrix layer, but is shown as exposed for illustrative purposes in this Fig. to denote an area having a different knit pattern. Area 68 on the tube may represent an area having either a different type of matrix material applied, a different knitted pattern, or different knitted materials, the intent being to illustrate how a very small portion of the tube can be modified in performance characteristics, yet avoids traditional overlapping layers of matrix material that are prone to delamination. Area 70 illustrates yet another change in either the knitted reinforcement layer and/or the matrix material in order to support a protruding hardware element 46. Area 40 in Fig. 3 and Fig. 3B are intended to illustrate incorporation of an electronic element such as a strain gauge or temperature monitor that can be incorporated directly into the knitted pattern, or may itself be made of a fibrous material which can be knitted directly into the knitted layer 20. The electronic element could also be one which measures electrical static buildup and voltage differentials across various portions of the tube. Such electronic elements can be used to monitor the state of the tube, such as the internal pressure, temperature, and other environmental factors. Fig. 3A illustrates the reinforcement layer 20 with two intersecting tubes that are knitted together at intersecting knit line 44. At this location, sets of fibers from both sections of tube can be looped with one another for a very secure connection. When the matrix material is applied over the intersecting knit line 44, the matrix material is continuous and therefore a traditional laminated seam is avoided. The modified section 48 has a geometric shape that is quite different than a cylindrical tube. This section may be produced with the use of external fixtures (not shown), similar to the manner in which the fixture 16 holds the flange 34. Area 50 may represent a reinforced portion of the tube, such as by applying additional matrix material thereby thickening the tube wall and/or increasing the density of the knitted pattern. Although not shown, the tube could also be made in a very flat shape with a narrow internal cavity, this shape being referred to as a clearance flat.

Referring to Fig. 4, another embodiment of the composite tubing of the invention is provided, namely, electrically tuned composite tubing. More specifically, Fig. 4 shows a completed or existing composite tube 10, and a knitted electrical tuning mesh element 72 that is sized to fit over or wrapped around the exterior surface 13 of the tube 10. Referring to Fig. 5, the knitted electrical tuning mesh element 72 is fitted over the composite tube 10, and is prepared to be permanently secured to the tube 10, such as by adding another

layer of matrix material, or adding a lamination layer over the knitted electrical tuning mesh element 72. Referring to Fig. 6, in addition to a knitted mesh configuration, electrical tuning of the composite tube 10 may be achieved by a woven electrical tuning mesh element 74, in which fibers or wire may be provided in a tubular woven configuration and then secured to the composite tube 10. With respect to the knitted electrical tuning mesh element 72, the knitting pattern may be the same as described with respect to the knitted reinforcement layer 20, thereby taking advantage of the benefits as previously described.

Referring to Fig. 7, yet another embodiment is provided for the electrically tuned composite tubing in which a knitted or woven mesh element 72/74 is secured over the knitted reinforcement layer 20 prior to addition of matrix material. As described below with respect to Fig. 9, a single application of matrix material can be used to complete construction of the electrically tuned composite tubing.

The materials used in the knitted or woven electrical tuning mesh elements 72/74 can be selected to precisely electrically tune the corresponding section of the composite tubing. Further, within the same knitted or woven electrical tuning mesh element 72/74, it is also contemplated that the woven or knitted configuration can be constructed to have variable or incrementally changing conductivity characteristics over a selected length or portion of the electrical tuning mesh element in order to precisely tune discrete sections of the tubing. This variable conductivity within a particular section or length of the electrical tuning mesh element can be achieved by adding or removing fibers/wires, and/or changing the particular density of the knitted or woven pattern. Because the electrical tuning mesh elements 72/74 can be made of any selected length and composition, it is therefore possible to incrementally adjust the electrical conductivity characteristics of discrete sections of tubing within a fluid conveying system. This electrical tuning capability is achieved without having to change the formulation of the matrix material, or otherwise having to alter the construction of the knitted reinforcement layer.

Referring to Fig. 8, a cross-sectional view is provided for the electrically tuned composite tubing according to the construction of Figs. 5 or 6. More specifically, the existing composite tube 10 has an additional matrix layer 80 applied over the exterior surface 13. The electrical tuning mesh element 72/74 is set within the additional matrix layer 80. Accordingly, the electrically tuned composite tubing of Fig. 8 includes two separate layers of matrix material joined to one another in an additional matrix material application step.

Referring to Fig. 9, another cross-sectional view is provided for the electrically tuned composite tubing, according to the construction of Fig. 7, in which a single application of matrix material is used to complete the tubing. As shown, the single matrix layer 82 is spread throughout the cross section, including between the knitted reinforcement layer 20 and the electrical tuning mesh element 72/74. Therefore, one advantage to the construction shown in Fig. 9 is that only a single matrix application step is required to create the electrically tuned composite tubing.

Referring to Fig. 10, in yet another aspect of the electrically tuned composite tubing, an electronic component 90 is added, and which may be weaved within the electrical tuning mesh element 72/74, or may otherwise be attached to the element 72/74. This electronic component 90 may be an electronic sensor for purposes of reporting the electrical status of the composite tubing during use. For example, in the event of damage occurring to the tubing, there is likely to be some breakage or deterioration of the element 72/74, thus resulting in some measurable amount of electrical discontinuity that would be detected and reported by the sensor 90. Further for example, if corrosion occurs over time, the corrosion may penetrate the layer(s) of matrix material thereby degrading the element 72/74 and resulting in some measurable amount of electrical discontinuity.

In another aspect of the present invention, a composite tube system is provided for incorporation within a larger assembly such as an aircraft or vehicle. According to the system, a plurality of separate composite tubes form a fluid conveying network with tubes having various diameters, lengths, and shapes. Because of the ease at which shape and diameter modifications can be achieved, the composite tube system is highly adaptable for applications in which there are constrained spaces for mounting a fluid conveying network, such as a fuel system.

While the present invention has been set forth in various embodiments, it shall be understood that changes and modifications to the preferred embodiments can be made within the scope of the claims appended hereto.

CLAIMS

What is claimed is:

1. An electrically tuned composite tube comprising:

a knitted reinforcement layer comprising a plurality of interlocking loops of fiber formed in a plurality of rows, and said adjacent rows interlocking one another to form a knitted pattern;

a knitted or woven mesh element of selected electrical tuning material placed over a selected length of said knitted reinforcement layer;

a matrix applied over said reinforcement layer and said mesh element, said matrix comprising resin and epoxy constituents, said matrix filling voids between said loops of said reinforcement layer, and between and around both said reinforcement layer and said mesh element, said matrix having an internal surface extending radially inward beyond the reinforcement layer and an external surface extending radially outward beyond the mesh element thereby forming the composite tube of a desired thickness and;

said composite tube is tuned for desired electrical properties including resistivity and conductivity performance characteristics by selecting said mesh element from one or more conductive or non-conductive fibers or wires.

2. The electrically tuned composite tube, claimed in claim 1, further including:

an electrically conductive zone having an electrical conductivity greater than remaining portions of said tube, said electrically conductive zone being controlled by a selection of fibers or wires in said mesh element, and said conductivity zone having a definable width and length.

3. The electrically tuned composite tube, claimed in claim 1, further including:

an electrically insulative zone having electrical insulative characteristics greater than remaining portions of said tube, said electrically insulative zone being controlled by a selection of fibers or wires in said mesh element, and said insulative zone having a definable width and length.

4. The electrically tuned composite tube, claimed in claim 1, wherein:

said reinforcement layer has a variable diameter along a length of said tube, and at least one non-circular cross- sectional area defining at least one of a

plurality of end configurations, said end configurations comprising at least one of a flange, a coupler, or a junction.

5. The electrically tuned composite tube, claimed in claim 1 wherein:

said mesh element includes at least first and second fibers or wires each having different electrical properties.

6. The electrically tuned composite tube, claimed in claim 5, wherein:

at least one of said first or second fibers or wires includes selected strands of having selected electrical or mechanical properties.

7. The electrically tuned composite tube, claimed in claim 1, wherein:

said knitted reinforcement layer comprises the interlocking loops arranged in a plurality of rows and columns, adjacent rows and adjacent columns being interlocked with one another, wherein fibers used to create the knitted pattern follow meandering non-parallel paths thereby forming said plurality of interlocking loops.

8. A method of making an electrically tuned composite tube comprising;

creating an arrangement of fiber into a knitted pattern forming a reinforcement layer, said knitted pattern comprising a plurality of interlocking loops;

providing a knitted or woven mesh element of selected electrical tuning material and placing said mesh element over a selected length of said reinforcement layer;

inserting an inflatable bladder within an open space within the reinforcement layer;

inflating the bladder such that pressure is applied by the bladder to interior surfaces of said reinforcement layer thereby holding the reinforcement layer in a pre-determined shape;

applying a matrix material over said reinforcement layer and said mesh element;

placing a perforated layer over said matrix, said perforated layer having a plurality of perforations;

applying an absorptive layer over said perforated layer;

applying an external impervious layer over said absorptive layer;

applying a vacuum through a vacuum port formed on the impervious layer resulting in said impervious layer applying a force against said matrix material and in opposition to force provided by the bladder;

curing the matrix for a period of time; and

removing the layers from the matrix material and removing the bladder resulting in the formation of the electrically tuned composite tube.

9. The method, as claimed in claim 8, wherein:

said reinforcement layer includes said interlocking loops arranged in a plurality of rows, adjacent rows being interlocked with one another such that fibers used to create said knitted pattern follow meandering non-parallel paths.

10. The method, as claimed in claim 8, wherein:

said reinforcement layer is knitted into a pattern that has a variable diameter along a length of the tube, and at least one portion having a non-circular cross-sectional area to form an end configuration, said end configuration comprising at least one of a flange, coupler, a junction, or a clearance flat when the composite tube is formed.

11. The method, as claimed in claim 8, wherein:

said knitted or woven mesh element includes at least first and second fibers or wires having differing conductive or resistive properties.

12. The method, as claimed in claim 11, wherein:

at least one of said first or second fibers or wires includes selected strands having selected electrically conductive or resistive properties.

13. An electrically tuned composite tube comprising:

a knitted reinforcement layer comprising a plurality of interlocking loops of fiber formed in a plurality of rows, and said adjacent rows interlocking one another to form a knitted pattern;

a first matrix layer applied over said reinforcement layer, said first matrix layer comprising first resin and epoxy constituents, said first matrix layer filling voids between said loops of said reinforcement layer, and between and around said reinforcement layer, said first matrix layer having an internal surface extending radially inward beyond said reinforcement layer and an external surface extending radially outward beyond said reinforcement layer thereby forming a composite tube of a first desired thickness;

a knitted or woven mesh element of selected electrical tuning materials placed over a selected length of said composite tube;

a second matrix layer applied over said composite tube and said mesh element, said second matrix layer comprising second resin and epoxy constituents,

said second matrix layer filling voids between said mesh element and an exterior surface of said composite tube, said second matrix layer having an internal surface in intimate contact with said exterior surface of said composite tube, and said second matrix layer having an external surface extending radially outward beyond said mesh element thereby forming an electrically tuned composite tube of a second desired thickness; and

wherein said electrically tuned composite tube is tuned for desired electrical properties including resistivity and conductivity performance characteristics by selecting said mesh element from one or more conductive or non-conductive fibers or wires.

14. The electrically tuned composite tube, claimed in claim 13, further including:

an electrically conductive zone having an electrical conductivity greater than remaining portions of said electrically tuned composite tube, said electrically conductive zone being controlled by a selection of fibers or wires in said mesh element, and said conductivity zone having a definable width and length.

15. The electrically tuned composite tube, claimed in claim 13, further including:

an electrically insulative zone having electrical insulative characteristics greater than remaining portions of said electrically tuned composite tube, said electrically insulative zone being controlled by a selection of fibers or wires in said mesh element, and said insulative zone having a definable width and length.

16. The electrically tuned composite tube, claimed in claim 13, wherein:

said knitted reinforcement layer has a variable diameter along a length of said tube, and at least one non-circular cross- sectional area defining at least one of a plurality of end configurations, said end configurations comprising at least one of a flange, a coupler, or a junction.

17. The electrically tuned composite tube, claimed in claim 13 wherein:

said mesh element includes at least first and second fibers or wires each having different electrical properties.

18. The electrically tuned composite tube, claimed in claim 17, wherein:

at least one of said first or second fibers or wires includes selected strands having selected electrical or mechanical properties.

19. The electrically tuned composite tube, claimed in claim 13, wherein:

said knitted reinforcement layer comprises the interlocking loops arranged in a plurality of rows and columns, adjacent rows and adjacent columns being interlocked with one another, wherein fibers used to create the knitted pattern follow meandering non-parallel paths thereby forming said plurality of interlocking loops.

Fig. 1

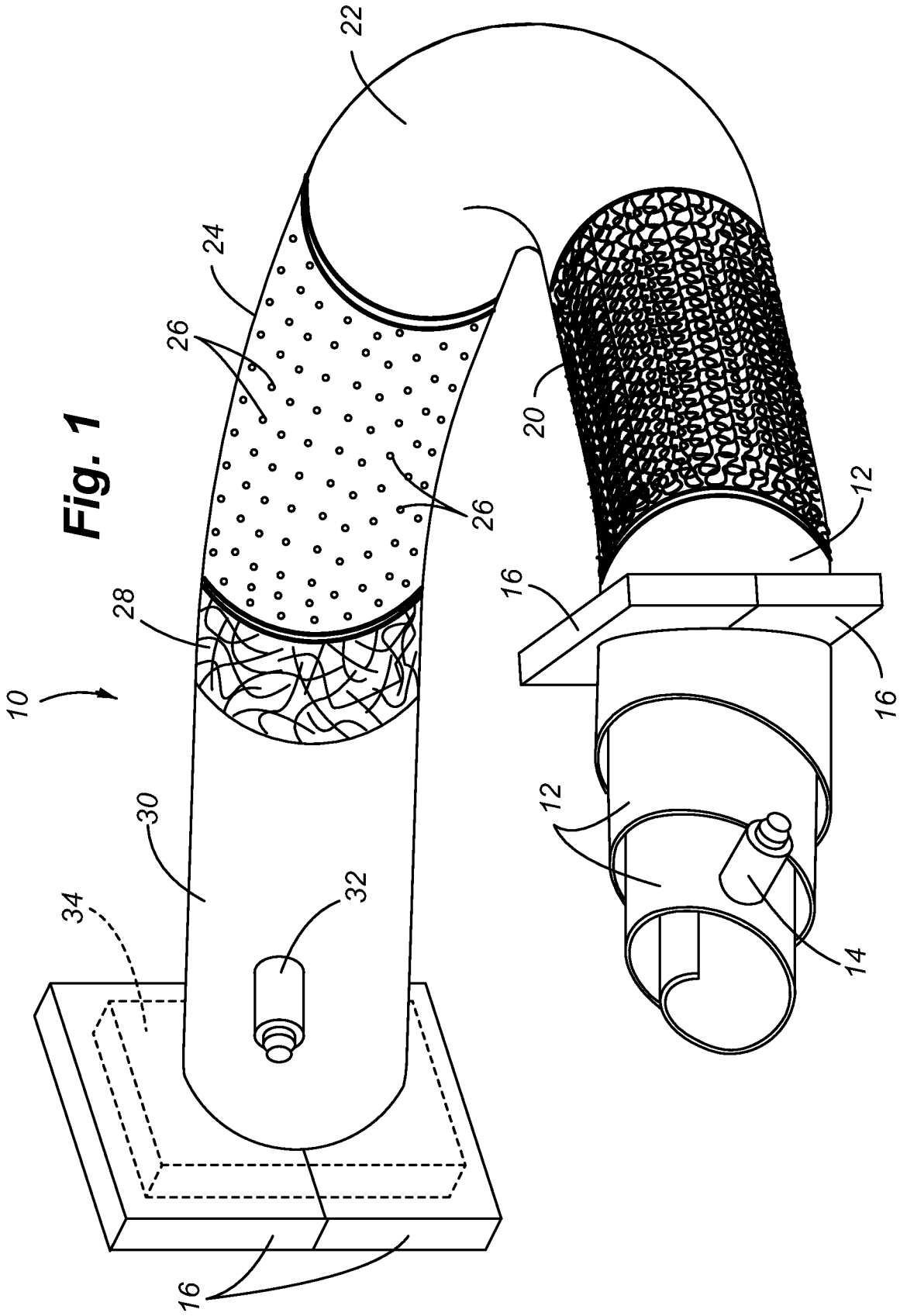

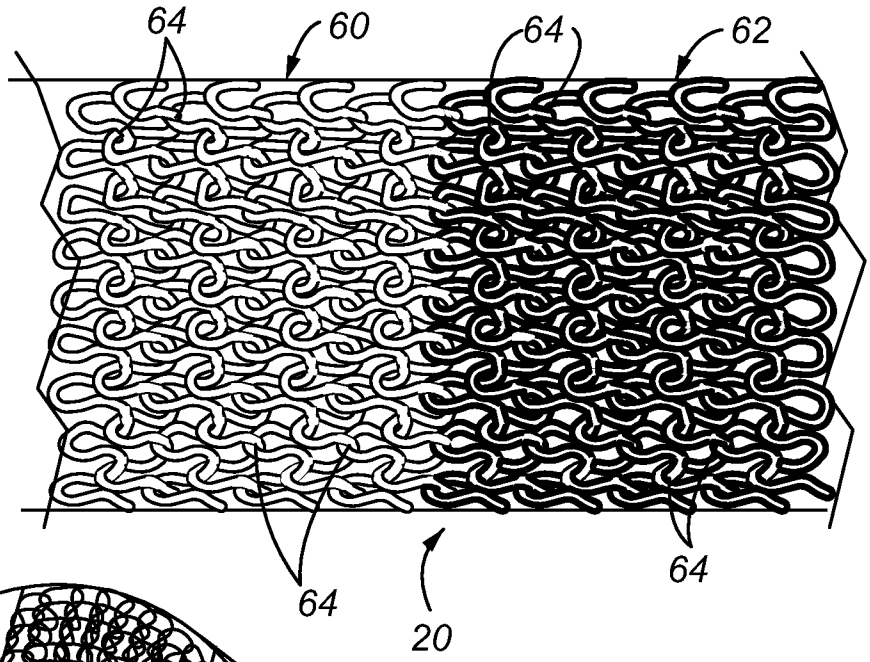

Fig. 2

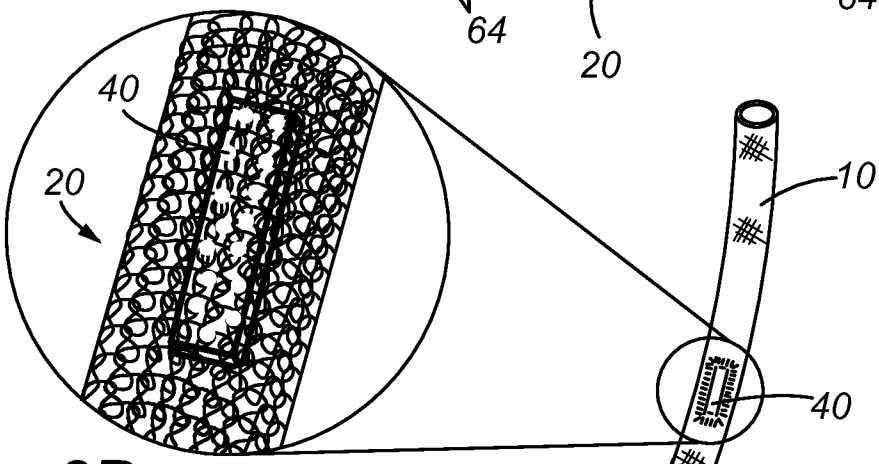

Fig. 3B

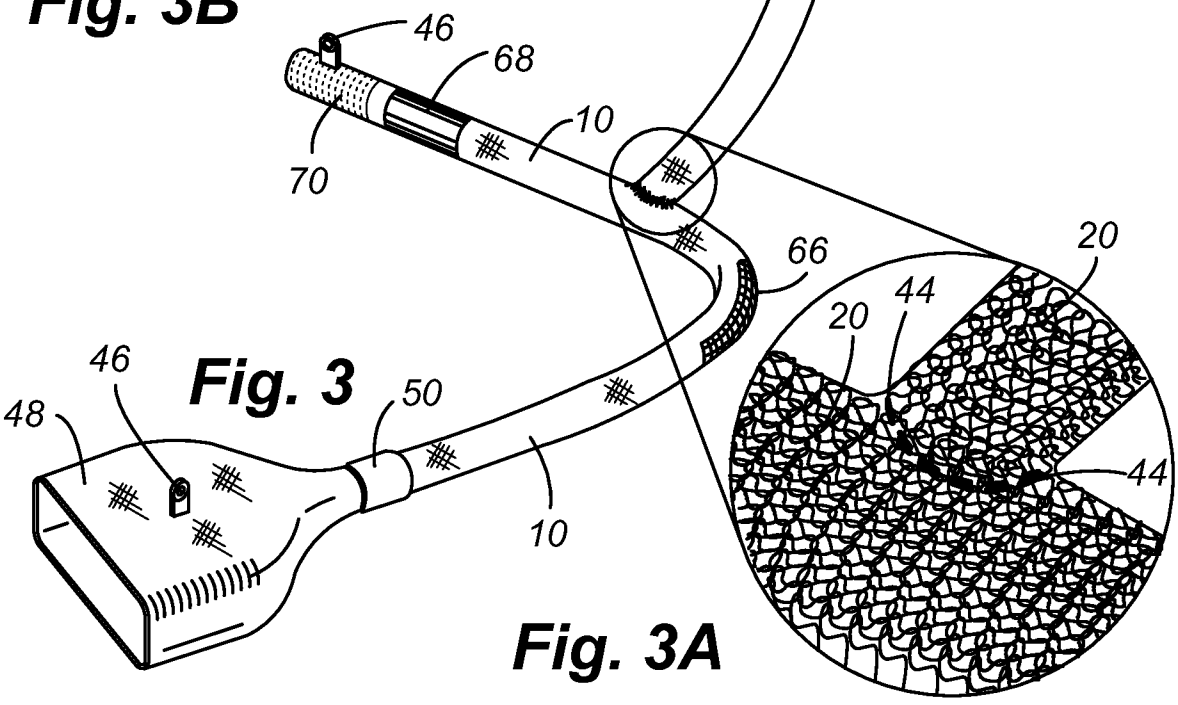

Fig. 3

Fig. 3A

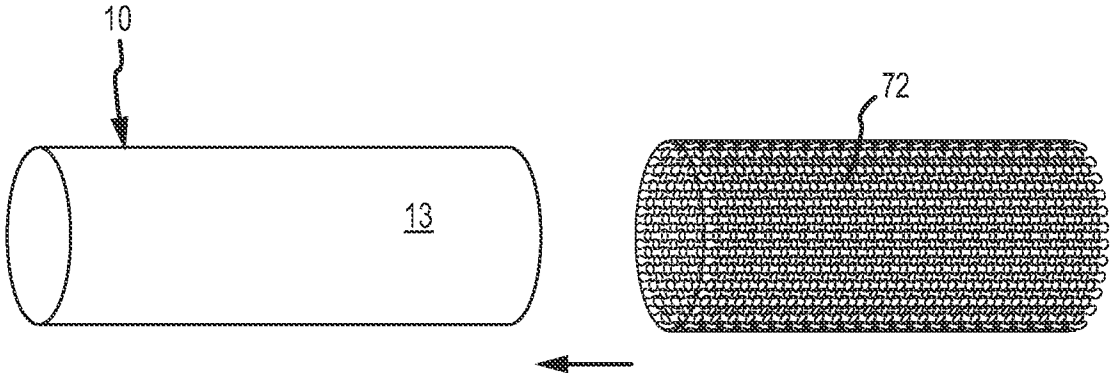

FIG.4

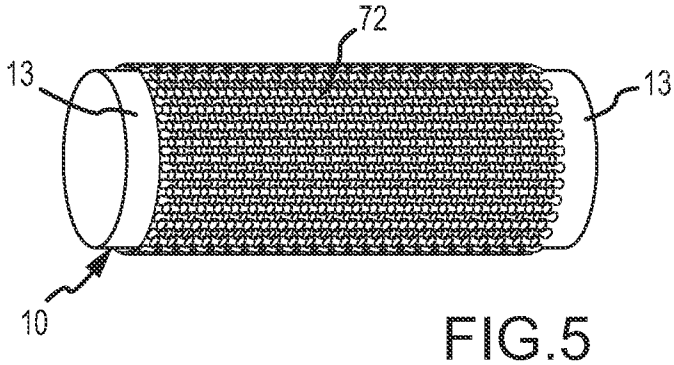

FIG.5

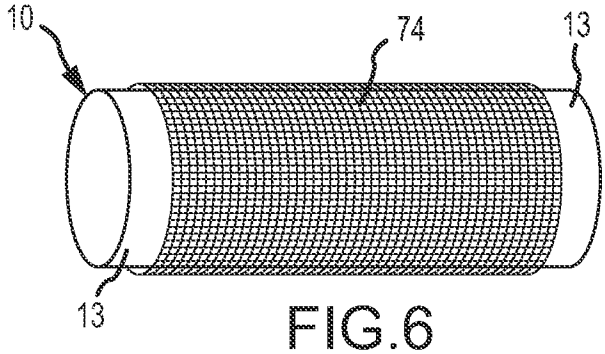

FIG.6

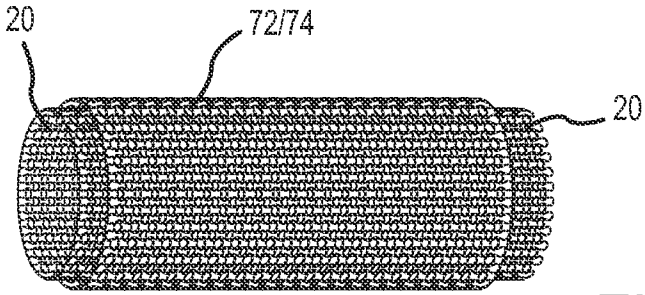

FIG.7

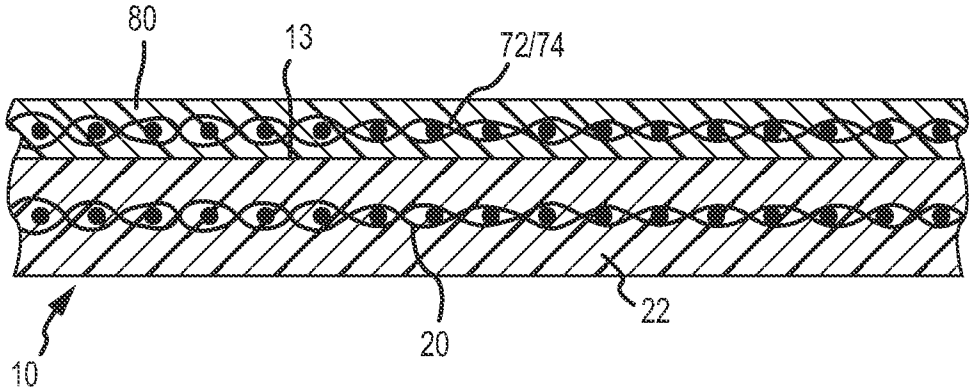

FIG.8

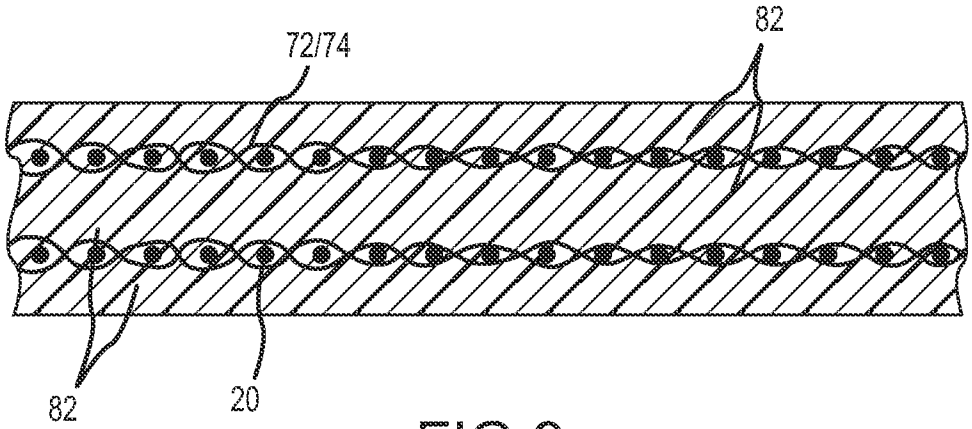

FIG.9

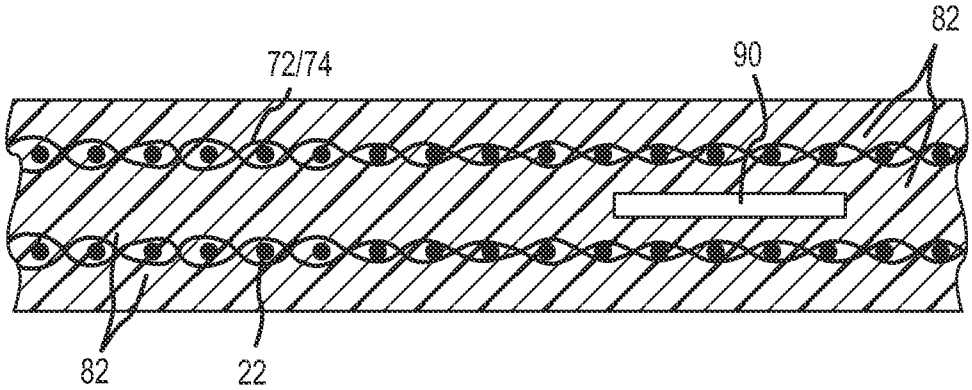

FIG.10

INTERNATIONAL SEARCH REPORT

International application No
PCT/US2014/041476

A. CLASSIFICATION OF SUBJECT MATTER
INV. F16L11/02 F16L11/08 F16L11/127
ADD.

According to International Patent Classification (IPC) or to both national classification and IPC

B. FIELDS SEARCHED

Minimum documentation searched (classification system followed by classification symbols)
F16L H01P B29D

Documentation searched other than minimum documentation to the extent that such documents are included in the fields searched

Electronic data base consulted during the international search (name of data base and, where practicable, search terms used)
EPO-Internal

C. DOCUMENTS CONSIDERED TO BE RELEVANT

Category*	Citation of document, with indication, where appropriate, of the relevant passages	Relevant to claim No.
X A	GB 1 506 182 A (CABLES DE LYON WAVEGUIDES [FR]) 5 April 1978 (1978-04-05) column 2, paragraph 2 -----	1-6, 13-18 7-12,19
X A	GB 2 211 266 A (SHRINEMARK LIMITED [GB]) 28 June 1989 (1989-06-28) abstract -----	1-6, 13-18 7-12,19
X A	US 2005/212161 A1 (AISENBREY THOMAS [US]) 29 September 2005 (2005-09-29) claim 17 -----	1-6, 13-18 7-12,19

☐ Further documents are listed in the continuation of Box C.

☒ See patent family annex.

* Special categories of cited documents :

"A" document defining the general state of the art which is not considered to be of particular relevance

"E" earlier application or patent but published on or after the international filing date

"L" document which may throw doubts on priority claim(s) or which is cited to establish the publication date of another citation or other special reason (as specified)

"O" document referring to an oral disclosure, use, exhibition or other means

"P" document published prior to the international filing date but later than the priority date claimed

"T" later document published after the international filing date or priority date and not in conflict with the application but cited to understand the principle or theory underlying the invention

"X" document of particular relevance; the claimed invention cannot be considered novel or cannot be considered to involve an inventive step when the document is taken alone

"Y" document of particular relevance; the claimed invention cannot be considered to involve an inventive step when the document is combined with one or more other such documents, such combination being obvious to a person skilled in the art

"&" document member of the same patent family

Date of the actual completion of the international search	Date of mailing of the international search report
10 September 2014	17/09/2014

Name and mailing address of the ISA/	Authorized officer
European Patent Office, P.B. 5818 Patentlaan 2 NL - 2280 HV Rijswijk Tel. (+31-70) 340-2040, Fax: (+31-70) 340-3016	Dauvergne, Bertrand

INTERNATIONAL SEARCH REPORT

Information on patent family members

International application No
PCT/US2014/041476

Patent document cited in search report	Publication date	Patent family member(s)	Publication date
GB 1506182 A	05-04-1978	CA 1031045 A1	09-05-1978
		DE 2518037 A1	13-11-1975
		FR 2269208 A1	21-11-1975
		GB 1506182 A	05-04-1978
		IT 1037586 B	20-11-1979
		JP S6024601 B2	13-06-1985
		JP S50148889 A	28-11-1975
		US 3952407 A	27-04-1976
GB 2211266 A	28-06-1989	NONE	
US 2005212161 A1	29-09-2005	NONE	