United States Patent [19]

Chiasson et al.

[11] **3,724,555**

[45] **Apr. 3, 1973**

[54] FLOATING FIRE EXTINGUISHING APPARATUS AND CATCH BASIN

[76] Inventors: **Randall J. Chiasson,** 808 Jefferson St; **Ronald G. Bourg,** 114 Thorobred Drive; **Tilton J. Arceneaux,** 1514 Lynn Avenue, all of Thibodaux, La.

[22] Filed: **Feb. 29, 1972**

[21] Appl. No.: **233,384**

[52] **U.S. Cl.** ..... **169/2 R**

[51] **Int. Cl.** **A62c 3/00**

[58] **Field of Search** ..... 169/1, 2 R; 166/2, 75, 315, 166/90, 81, 79

[56] **References Cited**

UNITED STATES PATENTS

3,554,290	1/1971	Verdin	169/2 R
3,664,429	5/1972	Jones	169/2 R

Primary Examiner—M. Henson Wood, Jr.
Assistant Examiner—A. Kashnikow
Attorney—James B. Lake, Jr.

[57] **ABSTRACT**

An enclosing floating structure, having an openable end, and pushable by a tug to enclose a burning offshore oil rig through the openable end which is then closed to smother a fire. Pumps mounted on the structure spray water over the burning rig to assist in putting out a fire and to cool the rig. Interconnected pressure relief vents are provided to relieve internal pressures. The annular space defined by the enclosing floating structure in the water for a depth equal to the draft of said structure provides a catch basin for the containment of liquid hydro-carbon liquids. Provision is made for removing pollutants from the catch basin before its capacity is exceeded or the openable end is opened.

5 Claims, 4 Drawing Figures

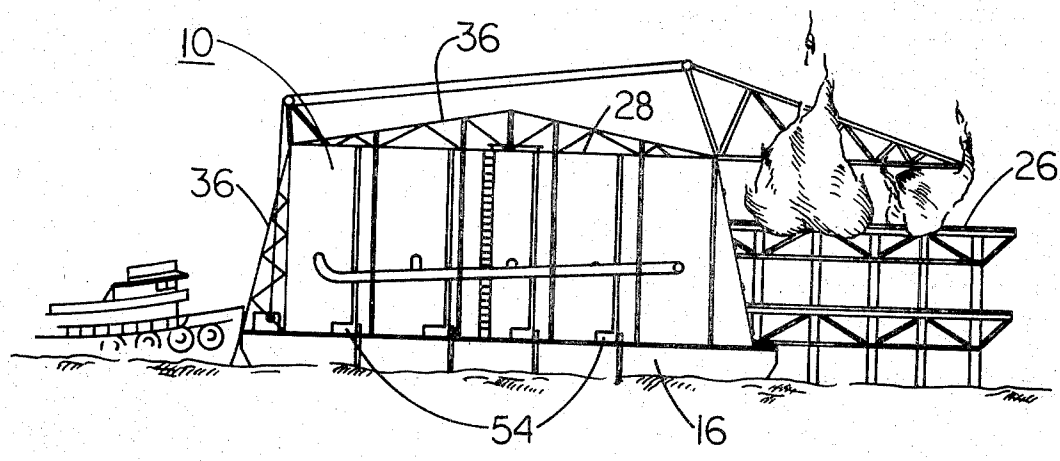

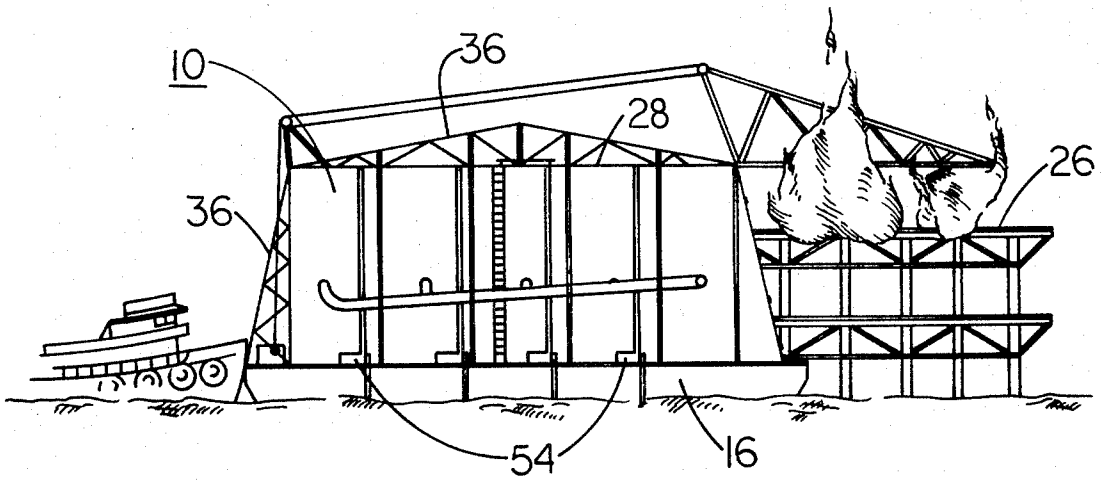
10
36
28
26
36
54
16

FIG. 1

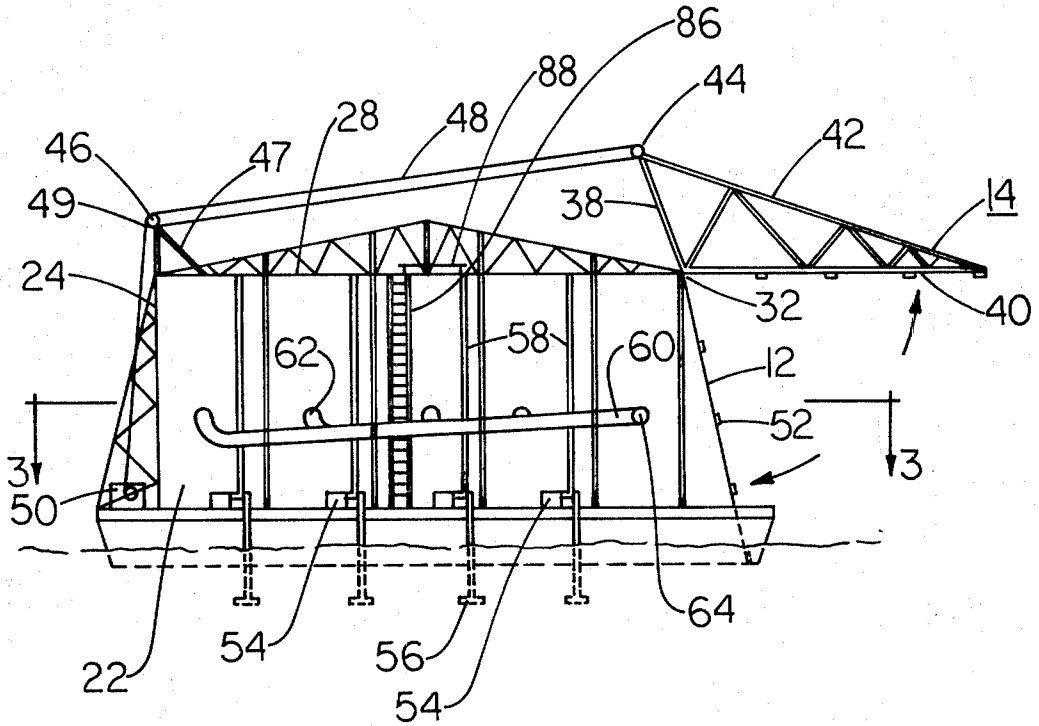
86
88
44
46
47
28
48
42
49
38
14
24
32
40
62
58
60
12
52
3
3
50
64
22
54
56
54

FIG. 2

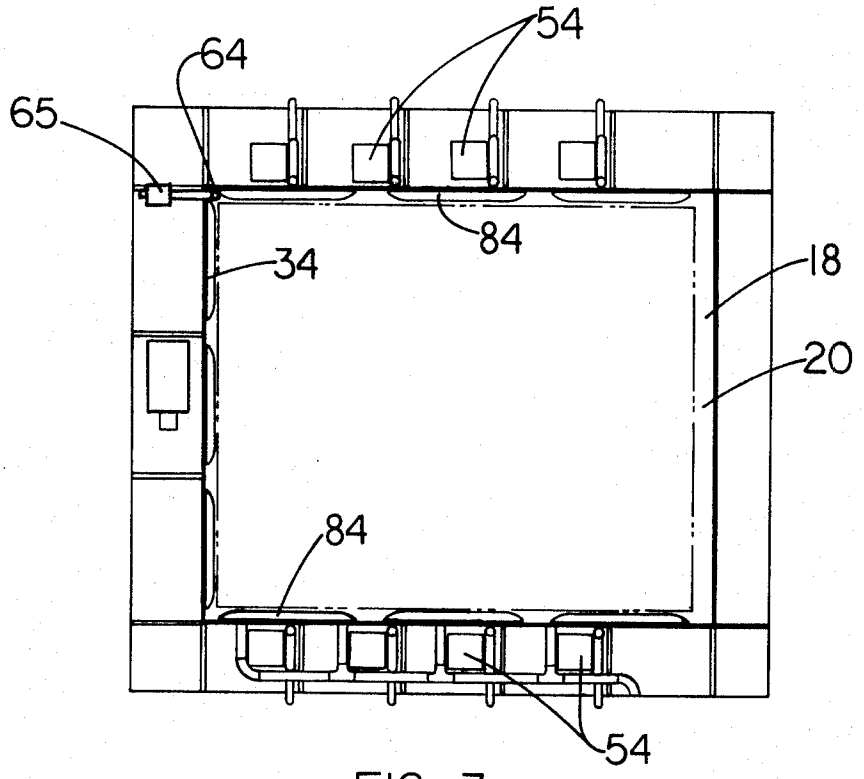

FIG. 3

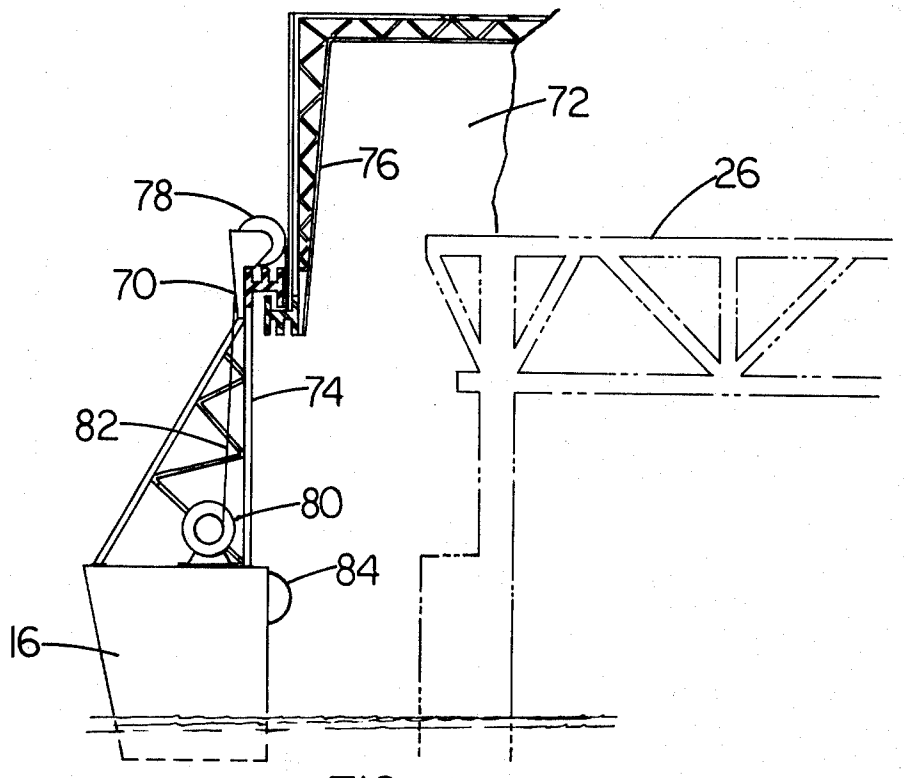

FIG. 4

FLOATING FIRE EXTINGUISHING APPARATUS AND CATCH BASIN

The invention relates generally to fire extinguishing apparatus, and more particularly to a floating structure and catch basin with an openable end for enclosing and smothering offshore oil rig fires.

The invention is an improvement of my telescoping fire extinguishing apparatus invention for smothering offshore oil rig fires that was filed about 24 Dec. 1971.

An object of the invention is to provide floatable structure for enclosing a burning oil rig at sea to smother a fire thereon.

Other objects and a fuller understanding of the invention may be had by referring to the following description, claims and drawings, in which:

FIG. 1 is a perspective view of the floating apparatus being pushed to enclose a burning rig,

FIG. 2 is a side view of the apparatus similar to FIG. 1,

FIG. 3 is a cross-sectional view taken along section lines 3—3 of FIG. 2, and

FIG. 4 is a partial end view of another specie of the invention, omitting parts common to both species.

Referring to FIGS. 1–3, the invention comprises a U-shaped floating structure **10**, having an open end **12** closable by a door **14**.

The U-shaped floating structure **10** comprises a U-shaped hull **16** defining a partially enclosed space of water **18**, a part of that on which the structure floats. A catch basin **20** is formed when the open end of the U-shaped hull **16** is closed, equal in depth to the draft of the floating structure. Internally smooth side walls **22** and an end wall **24** are mounted on the hull to conform therewith and extend upwardly therefrom sufficiently to clear the above water height of an off shore oil rig **26**. A top or roof **28** is secured to the upper edges of the walls **22** and **24**. The door **14** is hinged to the free edge **32** of roof **28**. The smooth interior surfaces of the walls, roof and door are lined with insulation material **34**. All supporting structure **36** of walls, roof and door are fixed to the exterior thereof.

The door **14** comprises a truss, triangular in cross-section, having a base **38**, a triangle side **40** and a hypotenuse **42**. It is hinged along the intersection of the base **38** and side **40** to the roof edge **32**, and the apex of the triangular truss is a free end. A pulley **44** is mounted at the apex of the base **38** and the hypotenuse **42**. A second pulley **46** is mounted above the roof **28** and supporting structure **36** on a bracket **47** and in line with the end wall **24**. A line **48** is fastened to the bracket **49** and passed around pulley **44** and back over pulley **46** and down to a power winch **50** adapted to take up or let out on line **48**. The door is opened or shut thereby. Complementary snap locks **52** are mounted on the adjacent edges of the door **14** and the side walls **22**, and adapted to cooperate to lock the door closed. The locks are manually releasable before raising the door.

A plurality of pumps **54** are mounted on the hull **16** exterior to walls **22**. They are connected to water intakes opening below the waterline of the hull and exterior to the floating structure **10**, and to discharge conduits **58** mounted exteriorly to walls **22** but discharging therethrough adjacent roof **28** to the interior and onto an enclosed burning rig.

A pressure relief duct **60** is slantingly mounted on the exterior of a wall **22** with its lower end and portions connected by feeder ducts **62** to the interior of the floating structure **10**. The duct **60** exhausts gases through its highest end portion **64**, with the entrained liquids trickling back down the feeder ducts **62** into the interior and catch basin **20**.

A pollutant conduit **64** is mounted on hull **16** and is equipped with discharge fittings for pumping the catch basin clear of pollutants entrapped therein.

Referring to FIG. 4, a second specie of the invention comprises telescoping sides **70** and closed end **72** mounted on a hull **16** similar in all respects to the hull priorly disclosed. All parts not illustrated in FIG. 4 are similar to the specie of FIGS. 1–3. The sides **70** and end **72** are respectively divided into two telescoping parts **74** and **76** with parts **76** nesting in parts **74** for reducing the overall freeboard of the floating structure when enroute to a burning rig. A pulley **78** is mounted at the top of part **74** and a power winch **80** mounted on the hull **16**. A line **82** is secured to the bottom of part **76** then led around pulley **78** and down to power winch **80**. Taking up the line **82** with the winch **80** raise parts **76** to the position shown in FIG. 4. Paying out the line lowers part **76** by gravity into its nesting position relative to part **74**.

Bumpers **84** are attached on the interior upper sides of hull **16** for engaging the sides of the rig as it is being enclosed and when enclosed but the floating structure.

In operation the floating structure **10** is pushed or pulled to the off-shore burning rig by a tug. On arrival if the floating structure is of the second species the telescoping sides are erected. In all species the door **14** is opened, pumps started for pumping water to the interior of the floating structure which is then pushed in position to enclose the rig. The door is closed to smother the fire by denying oxygen to support combustion. The water spray contributes to extinguishing the blaze and cools the heated rig for repairs. A ladder **86** is mounted on a side and leads from the hull to the roof **28** and a trapdoor **88** therein for inspecting the damage after the fire is out. The catch basin is emptied into a lighter, the door opened and the floating structure pulled from around the rig to allow its repair to proceed.

What is claimed is:

1. A floating fire extinguishing apparatus and catch basin for smothering offshore oil rig fires and preventing oil pollution from an oil well associated therewith, said apparatus comprising: a U-shaped hull having a space defined thereby with an opening for access thereto and adapted to receive an oil rig therethrough and therein, said hull for providing a floating mobile base; walls conforming to the shape of said hull and mounted thereon to extend upwardly at least as high as an oil rig; a roof mounted on the top of said walls and adapted to cover said space, said hull, walls and roof in combination forming an enclosing floating structure open at an end; and a door hingedly mounted on an edge of said roof adjacent said open end and adapted to close said open end to fully enclose an oil rig above water, and for the draft of said floating structure below water, in said space for smothering any fires associated therewith and catching any oil discharged in a catch basin formed therefor.

2. A floating fire extinguishing apparatus and catch basin as described in claim 1 wherein a pump is mounted on said floating structure adapted to pump sea water over an enclosed oil rig.

3. A floating fire extinguishing apparatus and catch basin as described in claim 1 wherein a conduit is mounted on said hull extending from surface of liquid in said space defined by said U-shaped hull to exterior of said hull; and discharge fixtures fixed to said conduit exterior to said hull for connecting to a lighter adapted to receive pollutants from said catch basin.

4. A floating fire extinguishing apparatus and catch basin as described in claim 1 wherein said walls define pressure relief vents, spaced apart in a slanting line, conduit means connecting said vents and open to the atmosphere at its high end and to the lowest vent at its low end for venting gaseous pollutants and distraining liquid pollutants therefrom to flow back into said catch basin.

5. A floating fire extinguishing apparatus and catch basin as described in claim 1 wherein said walls are horizontally divided and adapted to telescope relative to each other and to nest together; means for connecting said horizontally divided walls for said relative movement; and means mounted on said floating structure to produce said movement, whereby freeboard of said floating structure can be reduced by at least half when enroute to a burning oil rig.

* * * * *