D. COCKBURN & D. MacNICOLL.

SAFETY VALVE.

APPLICATION FILED DEC. 30, 1914.

1,164,990. Patented Dec. 21, 1915.

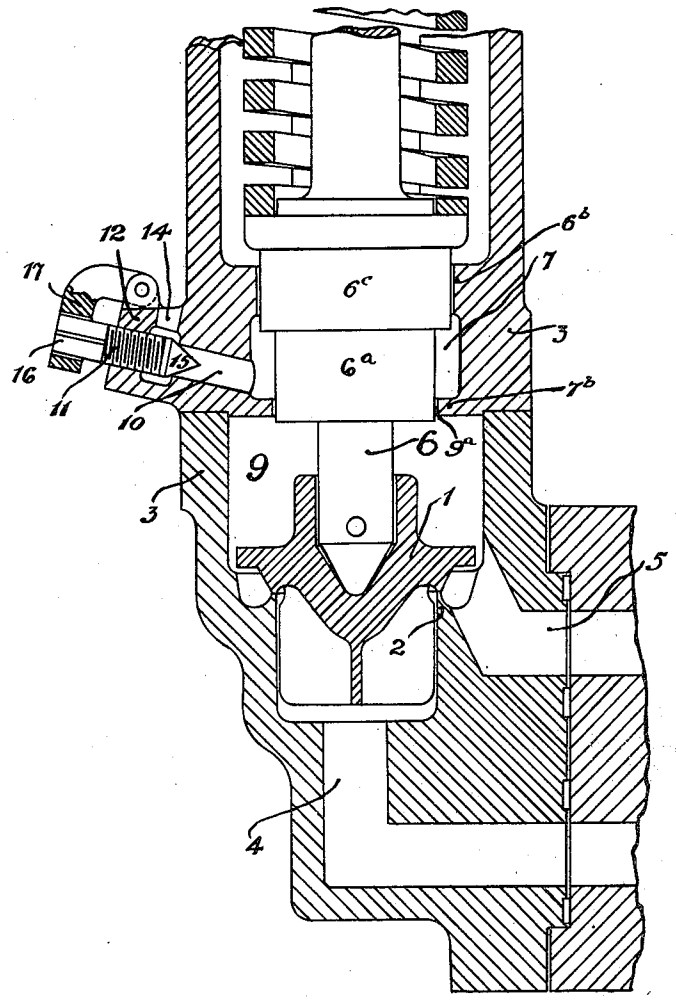

WITNESSES:

C. M. Sweeney

O. C. Sweeney

INVENTORS:

David Cockburn

Donald MacNicoll

By Galvin & Galvin Attys.

UNITED STATES PATENT OFFICE.

DAVID COCKBURN AND DONALD MACNICOLL, OF CARDONALD, NEAR GLASGOW, SCOTLAND.

SAFETY-VALVE.

1,164,990. Specification of Letters Patent. Patented Dec. 21, 1915.

Application filed December 30, 1914. Serial No. 879,713.

To all whom it may concern:

Be it known that we, DAVID COCKBURN and DONALD MACNICOLL, subjects of the King of the United Kingdom of Great Britain and Ireland, and both residing at Cardonald, near Glasgow, Scotland, have invented a certain new and useful Improvement in Safety-Valves, of which the following is a specification.

This invention relates to a safety valve of the type dependent for operation on the actuation of a pilot valve, as set forth in the specification of our U. S. Patent 1,056,005, dated March 18, 1913; and it consists in an improved construction of pilot valve adapted for use in conjunction with such safety valves wherein means are provided for maintaining the pilot valve unseated, whereby the duration of the period of opening of the main valve is controllable, said means including a piston-like enlargement formed on the pilot valve spindle and subject to fluid pressure in a compartment which is isolated from the conduit connecting the pilot valve with the main valve and is provided with a valved outlet orifice the extent of opening of which affects the duration of opening of the main valve.

The invention is illustrated in the figure of the accompanying drawing in which—

1 denotes the pilot valve normally resting on a seat 2 formed in the body of the valve casing 3. The said pilot valve 1 is loaded as usual and is subject to pressure of fluid which enters at a conduit 4 and, subsequent to the opening of the valve 1, passes through a conduit 5 communicating with a cylinder (not shown) accommodating the piston which operates the main valve.

The spindle 6 of the valve is formed with the usual enlarged piston-like portion 6^a adapted to reciprocate in a constricted portion 7^b of the valve casing, said portion 6^a being of the same effective area as the valve 1 and tending when subject to pressure of fluid within the chamber 9 to balance said valve 1. The valve casing 3 is formed with an annular compartment 7 communicating with the valve chamber 9 by way of a passage 9^a presented by the clearance between said portion 6^a and the portion 7^b of the casing 3.

Formed on the valve spindle 6 and cooperating with a constricted portion 6^b of the casing 3 is a supplementary piston-like member 6^c the effective area of which is in excess of that of the valve 1, said member 6^c when subject to pressure of fluid within the compartment 7 tending to retract the valve 1 from its seating 2. It will be readily understood that the maintenance of a predetermined fluid pressure in the compartment will be accompanied by continued retraction of the pilot valve 1 from its seat and, in consequence, by continuous opening of the main valve.

According to the present invention provision is made for regulating the pressure within the compartment 7 and thus controlling the duration of opening of the main valve. To this end, the casing 3 is formed with a port 10 arranged in operative relationship with a valve 11 by manual or mechanical adjustment of which latter the area for escape of fluid pressure is more or less constricted and the pressure of fluid correspondingly regulated. The valve 11 is preferably constituted by a needle valve the screw-threaded portion of which engages a threaded boss 12 cast in the pilot valve casing and formed with an aperture 14 presenting an outlet for the port 10.

The needle 15 constituting the valve proper is formed with a non-threaded polygonal extension 16 adapted to be engaged by a spanner, for instance, said extension 16 being circumcluded by a guard 17 pivoted to the pilot valve casing and having a polygonal aperture the walls of which prevent accidental rotation of the needle.

We claim:—

In a safety valve, in combination, a pilot valve provided with a spindle, a casing serving to house said pilot valve and presenting a chamber and a compartment communicating therewith, said compartment having an outlet, an enlarged piston-like member on said spindle subject to pressure of fluid in said chamber and serving to balance said pilot valve, a supplementary piston-like member coöperating with a constricted part of said casing and tending, when subject to fluid pressure in said compartment, to open said pilot valve, and a needle valve regulat-

ing said outlet, said needle valve being manually adjustable to vary the rate of escape of fluid from said compartment and thereby to control the variation of fluid pressure in said compartment and the consequent duration of opening of the main valve.

In testimony whereof we have signed our names to this specification in the presence of two subscribing witnesses.

DAVID COCKBURN.
DONALD MACNICOLL.

Witnesses:
D. K. HAMILTON,
DAVID CUSH.