(12) STANDARD PATENT (11) Application No. **AU 2002351649 B2**
(19) AUSTRALIAN PATENT OFFICE

(54) Title
Implant for fixing bones

(51) International Patent Classification(s)
A61B 17/80 (2006.01)

(21) Application No: **2002351649** (22) Date of Filing: **2002.12.02**

(87) WIPO No: **WO04/049962**

(43) Publication Date: **2004.06.23**
(43) Publication Journal Date: **2004.07.29**
(44) Accepted Journal Date: **2006.08.24**

(71) Applicant(s)
Synthes GmbH

(72) Inventor(s)
Mathieu, Claude;Lechmann, Beat;Frigg, Robert;Spichiger, Marco

(74) Agent / Attorney
Phillips Ormonde & Fitzpatrick, Level 22 367 Collins Street, Melbourne, VIC, 3000

(56) Related Art
US 6004323
US 2002/082603
DE 1949923
US 5578034
GB 1300449
US 5108399
US 2001/021851

2002351649 07 Jun 2005

ABSTRACT

The implant 1 is intended for use in bone fixation. It consists of a combination of the two materials metal and plastic. It is provided with several passages (2) with axles (3) running through the implant (1), which are suitable for receiving a bone fixation device, specifically a bone screw. The passages (2) are provided with a peripheral perimeter (4), which is made of a different materiel than the material of the implant (1) surrounding the perimeter (4).

This design provides an implant that is, on the one hand, not too rigid and, on the other hand, does not present problems as regards the screw-implant interface.

2002351649 07 Jun 2005

Implant for bone fixation

The invention relates to an implant for use in bone fixation, specifically a bone plate.

Bone plates made either of metals or metal alloys or of plastic materials, specifically resorbable polymers, are known to the Applicant. Metallic bone plates are, however, either too rigid, and the less rigid plastic plates, specifically plates made of resorbable plastics, do not provide the necessary strength. In addition, problems also occur when plastic plates are joined to metallic bone screws, specifically the joints in such cases are not always sufficiently stable.

It would be desirable to provide an implant that is, on the one hand, not too rigid and, on the other hand, does not present problems as regards the screw-implant interface.

According to the present invention, there is provided an implant for bone fixation

A) including a combination of the two materials, metal and plastic; and including

B) at least one passage running through the implant and having an axis for receiving a bone fixation device;

wherein

C) the at least one passage is provided with a peripheral perimeter that is made of a different material than the implant material surrounding the perimeter; and

D) the peripheral perimeter is linked form-fittingly rigidly to the plastic material of the implant.

In one embodiment of the implant, the perimeter is ring-shaped or sleeve-shaped. The external form of the perimeter can, however, also be designed with a polygonal, e.g. rectangular, shape.

The implant is preferably formed as a bone plate, with a bottom side and an upper side suitable for the bone contact, wherein the passages connect the upper side with the bottom side.

The perimeter is preferably made of a metal or a metal alloy and the material surrounding the perimeter is preferably a plastic. In this way, the plate will not have to

2002351649 07 Jun 2005

bear the same load. The plate is preferably also less rigid, which leads to improved healing of the bone in accordance with Wolff's law, and finally it can also be less radio opaque, which means that less artefacts appear in the x-ray pictures, CT or MRI, which in turn allows enhanced monitoring of the healing process.

The perimeter can, however, also be made of a plastic, and the material surrounding the perimeter can be a metal or a metal alloy.

Preferred plastics include PEEK or some related polymers from the Polyaryletherketone (PAEK) family. The plastic can moreover also be reinforced, e.g. with carbon fibres or PEEK fibres.

Preferred metals are, for example, titanium, titanium alloys or implant steel.

The elements of the implant made of plastic are preferably covered with a coating of titanium or a Hydroxylapatite layer. The advantage of such coating is that it can prevent direct contact between metal and bone, while at the same time achieving the same surface as with a metal plate, but nevertheless has the mechanical features of a plastic.

In a special embodiment, the perimeter is provided with a sleeve-shaped extension suitable as a target aid for a bone fixation device. The extension can be formed on the perimeter and both – perimeter and sleeve-shaped extension - are preferably made of plastic.

One particularly simple embodiment of the implant is when the perimeter is made of metal or a metal alloy and is set lowered in the plastic surrounding the perimeter, relative to the upper side. Alternately, the perimeter can be set higher in the surrounding plastic, relative to the upper side.

The level containing or lying on the perimeter can in one embodiment form an angle in the range 0.1° to 20.0° to the plate level, so that the passages (or the axes of the passages) will then also be able to form such an angle relative to the verticals on the plate level.

2002351649 07 Jun 2005

In one embodiment, the implant – specifically when this entails a bone plate - is provided with at least two passages running through the implant, which are suitable for receiving a bone fixation device, specifically a bone screw.

In a further embodiment, at least two of the passages running through the implant are provided with a peripheral perimeter that is made of a different material than the implant material surrounding the perimeter.

The peripheral perimeters will then preferably be linked to each other in one piece by several passages running through the implant, which allows both simple manufacture of the implant and improved anchoring of the perimeters in the surrounding plastic material.

In a further embodiment, the peripheral perimeters are securely linked to the implant. This results in enhanced stability and simplified handling of the implant compared to removable peripheral perimeters.

When there are several peripheral perimeters, these can also be joined together in the form of a grid.

The implant can be fixed to the bone to be treated by means of suitable bone fixation devices that can be inserted into the passages, preferably in the form of bone screws. The bone screws can be inserted in mono-axial or poly-axial direction in relation to the implant. The connection of the bone screws to the implant can be carried out either with a stable or non-stable angle.

The invention and derived forms of the invention shall be described in more detail in the following on the basis of a partially schematic representation of several embodiments.

Fig. 1 shows an overview view of a bone plate made of plastic with four plate drill holes, with a metallic, rectangular perimeter;

Fig. 2 shows a longitudinal section through the bone plate according to Fig. 1 along the line II-II;

2002351649 07 Jun 2005

Fig. 3 shows a perspective view of a modified bone plate with sleeve-shaped perimeters;

Fig. 4 shows an overview on the bone plate according to Fig. 3; and

Fig. 5 shows a perspective view of a modified bone plate with a sleeve-shaped extension on one of the plate holes.

The implant 1 illustrated in Fig. 1 and Fig. 2 is a bone plate, the main element of which consists of bio-compatible plastic, e.g. Polyetheretherketone (PEEK), and which is provided with four passages 2 in the form of circular holes with the axle 3 for receiving bone screws (not shown in the illustration). The passages 2 connect the bottom side 5 of the bone plate suitable for attachment to the bone to its upper side 6.
The passages 2 are provided in the form of rectangular dies made of metal, which can be designed as perimeters 4 of the passages 2. The perimeters 4, which can for example be made of titanium, are worked into the surrounding plastic material 7 (e.g. PEEK) in spray cast according to their manufacture and are connected with positive fit to the plastic material 7.

A variation of the insertion of the perimeter 4 in the plastic material 7 is shown on the right side of Fig. 2, in which the metallic dies are set less high than on the left side of Fig. 2, so that they are set lowered relative to the upper side 6 and the bottom side 5, and are therefore surrounding by plastic material 7.

In another embodiment shown in Fig. 3 and Fig. 4, the implant 1 is also a bone plate. This is made of PEEK, which is reinforced with PEEK fibres. In contrast to the embodiment in accordance with Fig. 1 and Fig. 2, two perimeters 4 made of titanium are joined together as one piece in each case and set into the surrounding PEEK material 7 as spray cast in its entirety. The external form of the different perimeters 4 is thereby circular or sleeve-shaped.

2002351649 07 Jun 2005

In the case of a modification shown in Fig. 5, a sleeve-shaped extension 8 is formed on one of the perimeters 4 that is suitable as target aid for a bone fixation device, e.g. a bone screw.

The invention described herein is susceptible to variations, modifications and/or additions other than those specifically described and it is to be understood that the invention includes all such variations, modifications and/or additions which fall within the spirit and scope of the above description.

2002351649 07 Jun 2005

THE CLAIMS DEFINING THE INVENTION ARE AS FOLLOWS:

1. An implant for bone fixation
   A) including a combination of the two materials, metal and plastic; and including
   B) at least one passage running through the implant and having an axis for receiving a bone fixation device;

wherein

   C) the at least one passage is provided with a peripheral perimeter that is made of a different material than the implant material surrounding the perimeter; and
   D) the peripheral perimeter is linked form-fittingly rigidly to the plastic material of the implant.

2. An implant in accordance with claim 1, wherein the perimeter is ring-shaped or sleeve-shaped.

3. An implant in accordance with claim 1, wherein the perimeter is provided with a polygonal external form.

4. An implant in accordance with any one of claims 1 to 3, wherein the implant is formed as a bone plate that is provided with a bottom side and an upper side suitable for bone contact, wherein the at least one passage connects the upper side to the bottom side.

5. An implant in accordance with any one of claims 1 to 4, wherein the perimeter is made of a metal or a metal alloy and wherein the material surrounding the perimeter is plastic.

6. An implant in accordance with any one of claims 1 to 4, wherein the perimeter is made of a plastic and wherein the material surrounding the perimeter is a metal or a metal alloy.

7. An implant in accordance with any one of claims 1 to 6, wherein the plastic is chosen from the Polyaryletherketone (PAEK) family.

2002351649 07 Jun 2005

8. An implant in accordance with any one of claims 1 to 6, wherein PEEK is used as plastic.

9. An implant in accordance with any one of claims 1 to 8, wherein the plastic is reinforced, preferably with carbon fibres or PEEK fibres.

10. An implant in accordance with any one of claims 1 to 9, wherein the metal is a titanium alloy or implant steel.

11. An implant in accordance with any one of claims 1 to 10, wherein the elements of the implant that are made of plastic are covered with a coating of titanium or a Hydroxylapatite layer.

12. An implant in accordance with any one of claims 1 to 11, wherein the perimeter is provided with a sleeve-shaped extension as target aid for a bone fixation device.

13. An implant in accordance with claim 12, wherein the extension is formed on the perimeter and both are made of plastic.

14. An implant in accordance with any one of claims 1 to 12, wherein the perimeter is made of a metal or a metal alloy and is set lowered in the plastic surrounding the perimeter, relative to the upper side.

15. An implant in accordance with any one of claims 1 to 12, wherein the perimeter is made of a metal or a metal alloy and set raised in the plastic surrounding the perimeter, relative to the upper side.

16. An implant in accordance with any one of claims 1 to 15, wherein the level containing or laid on the perimeter has an angle in the range 0.1° to 20.0° to the plate level.

2002351649 07 Jun 2005

17. An implant in accordance with any one of claims 1 to 15, wherein the implant is provided with at least two passages running through the implant with an axle for receiving a bone fixation device.

18. An implant in accordance with any one of claims 1 to 17, wherein at least two of the passages running through the implant are provided with a peripheral perimeter that is made of a different material than the material of the implant surrounding the perimeter.

19. An implant in accordance with any one of claims 1 to 18, wherein the peripheral perimeters are joined to each other in one piece by several passages running through the implant.

20. An implant in accordance with any one of claims 1 to 19, wherein several peripheral perimeters are joined to each other in the form of a grid.

21. An implant in accordance with any one of claims 1 to 20, wherein the implant includes at least one bone fixation device that can be inserted into the passages, preferably a bone screw, which is positioned in poly-axial direction in relation to the implant.

22. An implant in accordance with any one of claims 1 to 21, wherein the implant includes at least one bone fixation device that can be inserted into the passages, preferably a bone screw, which can be connected with the implant with stable angle.

23. An implant according to any one of the embodiments substantially as herein described and illustrated.

DATED: 3 June 2005
PHILLIPS ORMONDE & FITZPATRICK
Attorneys for:
MATHYS MEDIZINALTECHNIK AG

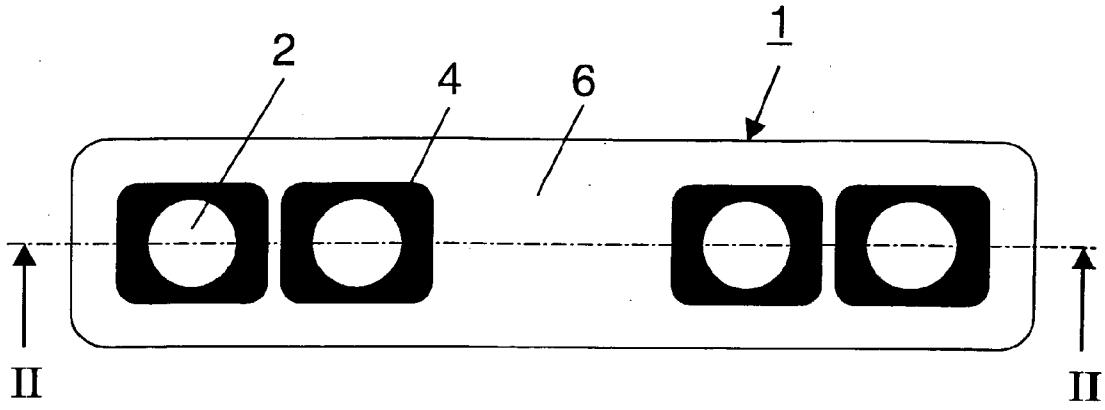

Fig. 1

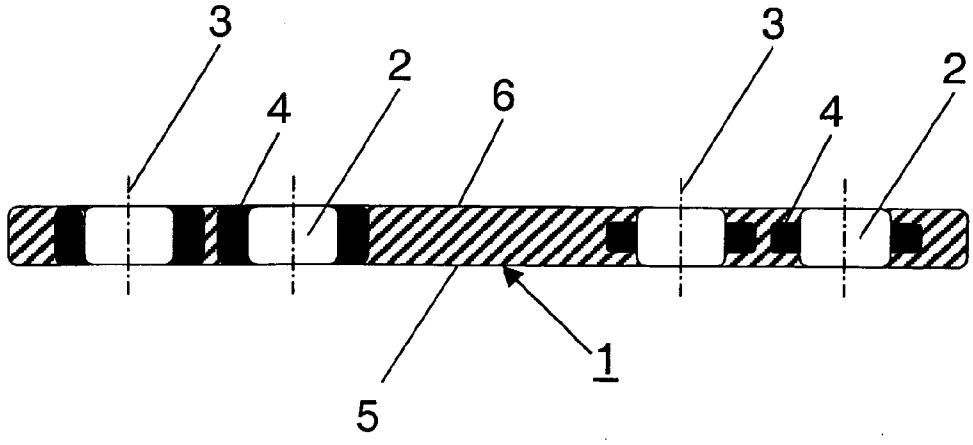

Fig. 2

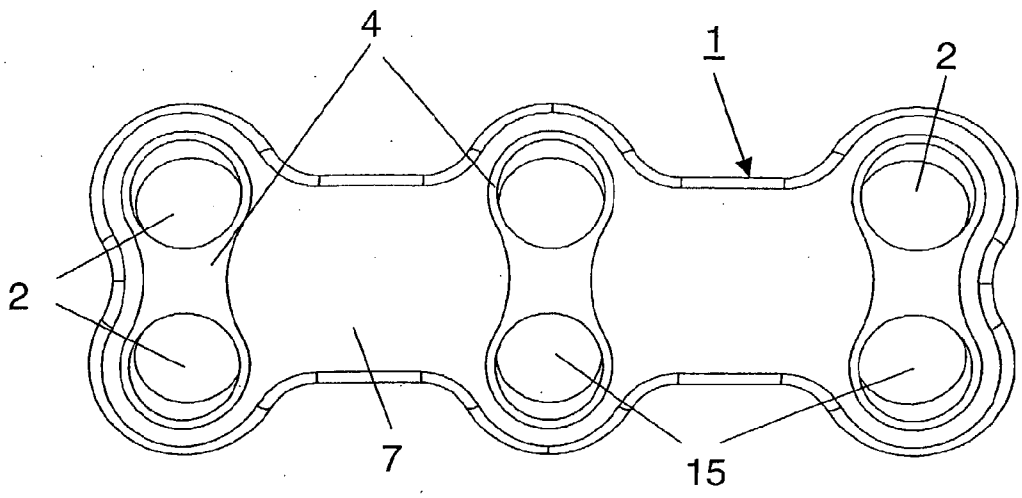

Fig. 4

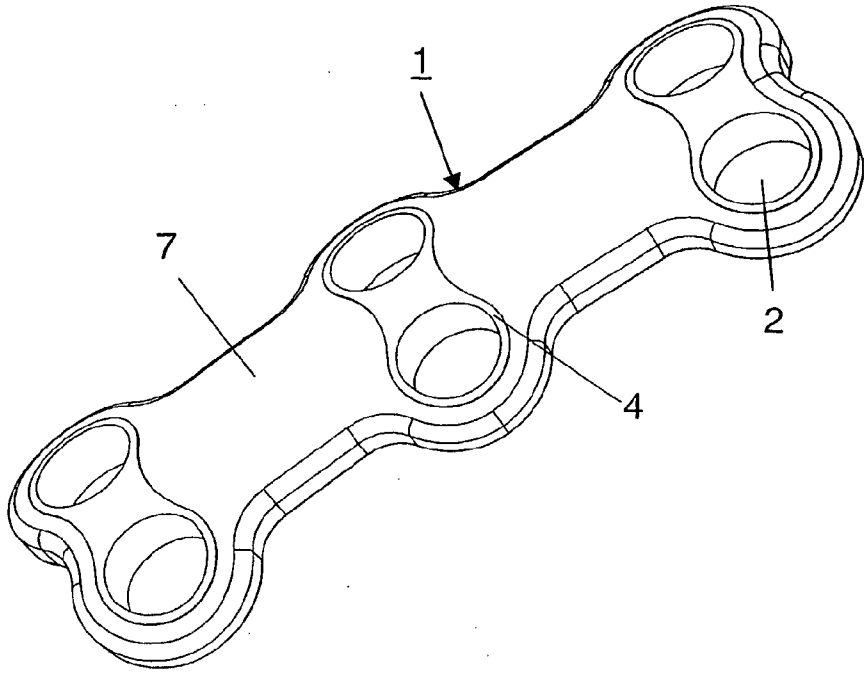

Fig. 3

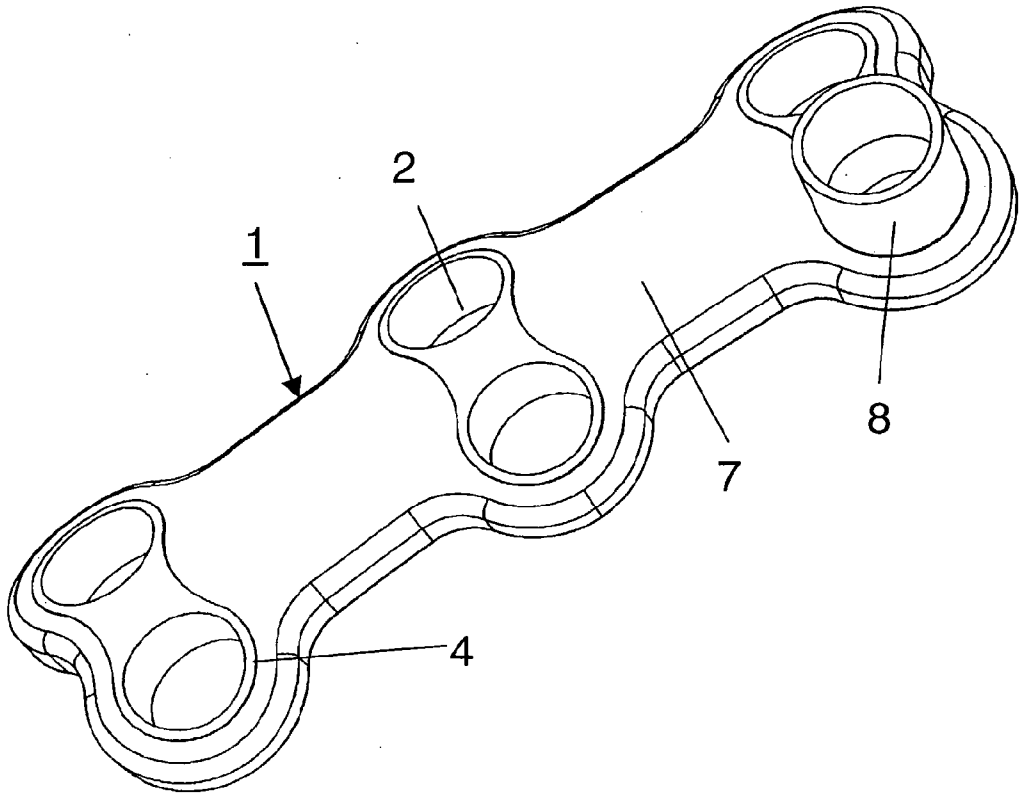

Fig. 5