C. E. YOUMANS.

ATTACHMENT PLUG FOR CONNECTING DRY CELLS TO INCANDESCENT LAMP HOLDERS.

APPLICATION FILED NOV. 23, 1915. RENEWED APR. 30, 1917.

1,248,978. Patented Dec. 4, 1917.

Fig. 1.

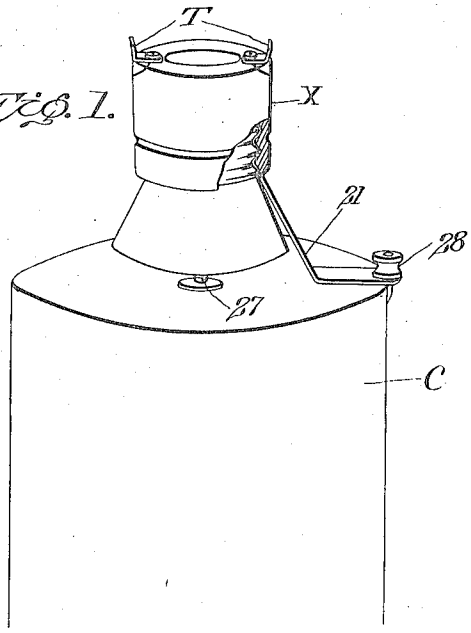

Fig. 2.

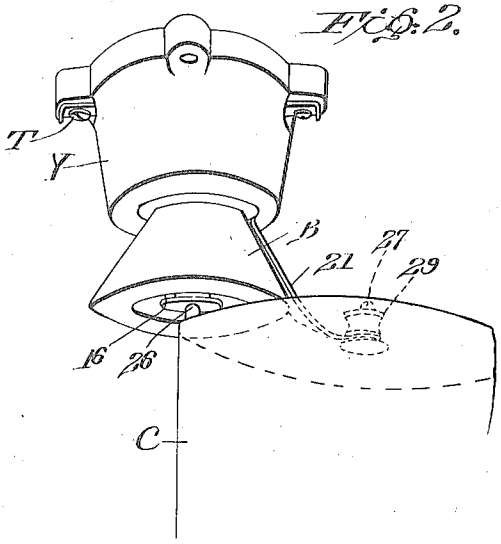

Fig. 3.

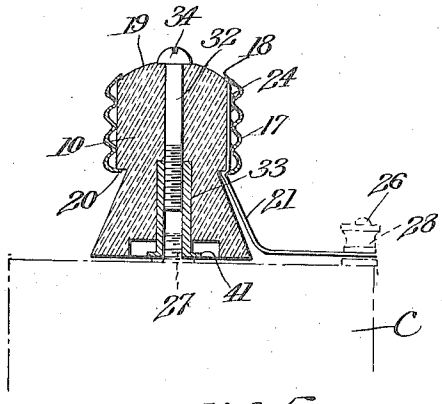

Fig. 4.

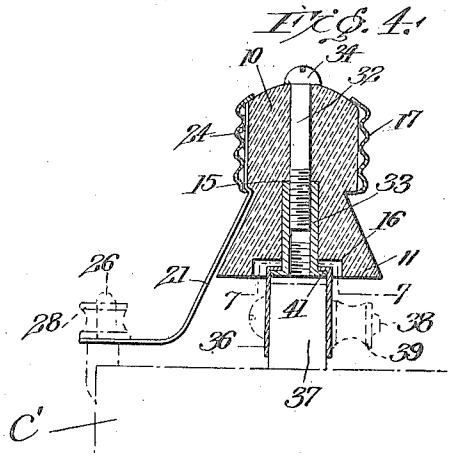

Fig. 5.

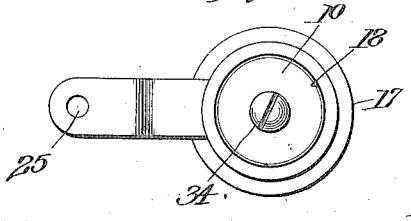

Fig. 6.

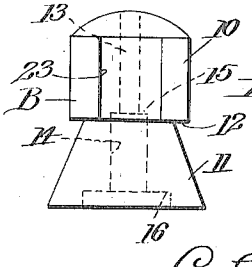

Fig. 7.

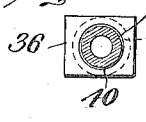

Witnesses
G. F. Baker.
E. L. Greenewald.

Inventor
C. E. Youmans
Foster Freeman Watson & Coit
Attorneys

UNITED STATES PATENT OFFICE.

CHARLES ERNEST YOUMANS, OF YONKERS, NEW YORK.

ATTACHMENT-PLUG FOR CONNECTING DRY CELLS TO INCANDESCENT-LAMP HOLDERS.

1,248,978. Specification of Letters Patent. Patented Dec. 4, 1917.

Application filed November 23, 1915, Serial No. 63,074. Renewed April 30, 1917. Serial No. 165,608.

To all whom it may concern:

Be it known that I, CHARLES ERNEST YOUMANS, a citizen of the United States, residing at Yonkers, county of Westchester, State of New York, have invented certain new and useful Improvements in Attachment-Plugs for Connecting Dry Cells to Incandescent-Lamp Holders, of which the following is a specification.

My invention relates to devices such as attachment plugs which may be used for the purpose of connecting an ordinary dry cell to an incandescent lamp holder, such as the ordinary socket and receptacle. Where dry cells are used, as in motor boats, automobiles, private dwellings, factories, etc., it is desirable to connect them to permanent connection devices which are capable of being wired together, and it is the purpose of this invention to provide a simple and inexpensive connector or adapter by means of which ordinary dry batteries, provided with the usual side zinc terminal and center carbon terminal, may be connected to ordinary incandescent lamp holders, such as sockets and receptacles.

The above and other objects and the novel features of my invention will be apparent from the following description taken in connection with the drawing, in which,

Figure 1 is a perspective view of the upper end of an ordinary dry cell to which an attachment plug embodying my invention is connected, the attachment plug being fitted in an electric lamp receptacle of a well known type;

Fig. 2 is a perspective view of part of a dry cell which shows the attachment plug mounted on the side zinc terminal instead of centrally on the battery, the attachment plug being fitted in another type of electric lamp receptacle;

Fig. 3 is a central vertical sectional view of one form of attachment plug embodying my invention, showing the same in position in a dry cell, such as is shown in Fig. 1;

Fig. 4 is a central vertical cross sectional view of another form of attachment plug for use on dry cells in which the central carbon post projects from the top of the cell;

Fig. 5 is a plan view of an attachment plug;

Fig. 6 is a side elevation showing the construction of the body of the plug; and

Fig. 7 is a transverse sectional view on the line 7—7 of Fig. 4.

Referring to the drawing, each plug comprises a body B, which may be of porcelain or other suitable molded insulating composition and comprises a substantially cylindrical part 10 joined to a bottom flaring part 11 by a shoulder 12. The body B has a central longitudinally extending bore which consists of the parts 13 and 14 of different diameters joined by the shoulder 15. The part 14 of the bore terminates at its lower end in an enlarged recess 16 which opens at the bottom face of the flaring part 11 of the body B.

The cylindrical part of the body B has a contact thereon in the form of a screw shell 17, the thread of which fits the usual threaded portion of an Edison incandescent lamp holder, which may be in the form of an ordinary lamp socket having a center lamp contact and a threaded side lamp contact. The shell 17 is also adapted to fit Edison lamp receptacles, such as the receptacles X and Y, shown in perspective in Figs. 1 and 2 and which are provided with the exposed terminals T, whereby a series of receptacles may be readily wired together to electrically connect a group of the cells.

The shell 17 is provided at its upper end with an inwardly extending flange 18 fitting on the curved top 19 of the body B and the lower edge of the shell is turned or spun inwardly as at 20 beneath the shoulder 12, whereby the shell 17 is firmly held in place on the body B without special fastening devices. The screw shell 17 has a terminal plate 21 longitudinally connected thereto. The upper end 22 of the terminal plate 21 extends into a groove 23 in the outer surface of the cylindrical part 10 of the body B and may be permanently connected to the shell 17 by the solder 24. The plate 21 rests against the inclined part of the body B and extends laterally to the side of the body, the outer end of the plate being provided with a hole 25 which will fit either the upright binding post 26, which is connected to the zinc element of the cell, or the upright center binding post 27, which is connected to the carbon element of the cell. The plate 21 is flexible and may be clamped in place on the binding posts 26 and 27 by means of the usual thumb nuts 28 and 29.

The carbon binding post 27 is connected to the center contact of the lamp holder, when the attachment plug is inserted into the lamp holder, by means of the screw 32 and threaded sleeve 33. The upper end of the sleeve 33 abuts against the shoulder 15 in the central bore and is held against that shoulder by the screw 32, which is threaded on its inner end and has threaded engagement with the sleeve 33. The screw 32 is provided with a head 34 which forms the center contact of the plug and is adapted to engage the center contact of the lamp holder of the socket or receptacle. At its lower end the sleeve 33 is threaded to engage the threads on the upright binding post 27 of the cell C. The plug may be attached to the binding post 27 by turning it thereon before the plate 21 of the plug is attached to the side zinc binding post. In attaching the center contact of the plug to the zinc binding post the operation is practically the same. Thus the attachment plug is suitable for use in either way; that is the center terminal thereof may be secured to either the zinc or the carbon element of the cell, as desired. When the attachment plug is in position on the cell C, the plug may be inserted in the receptacle X or Y by simply turning the cell and plug together and screwing the plug into the receptacle. The plug will thus serve to suspend the cell from the lamp holder and electrically connect it to the contacts of the lamp holder.

Fig. 4 shows an attachment plug substantially similar to the plug shown in Figs. 1 to 3 except that in that construction the plug is provided with a U-shaped clip 36 to adapt the attachment plug for use with cells C′ in which the carbon element 37 projects above the top of the cell and is provided with a transverse binding screw 38 and clamping nut 39. The clip 36 has the parallel portions thereof spaced apart so as to engage the opposite faces of the upper end of the carbon 37 and those portions are each provided with a hole to receive the binding screw 38 whereby the clip may be clamped to the carbon 37. The portion of the clip corresponding to the bottom of the U is provided with a hole 40, said hole being arranged so that the sleeve 33 may be slipped therethrough. The lower end of the sleeve 33 has a flange 41 thereon which engages the inner side of the clip and supports the clip, the upper end of the clip being disposed within the cavity 16 in the bottom face of the body of the plug. The attachment plug is thereby supported centrally on the cell on the upper end of the carbon element 37 and the laterally extending conducting plate 21 may be secured to the side zinc binding post as in other form of cell.

By means of the attaching plug shown, the usual dry cells on the market having the center carbon binding post and side zinc binding post may be readily connected without necessity of changing or disconnecting any wires. Furthermore, the attaching plug may be used repeatedly and will fit any ordinary incandescent lamp holder having the usual threaded socket shell and center contact, although it is to be understood that the particular socket shell and center contact of the lamp holder may be varied and the connecting means on the plug adapted to them.

Certain changes may be made in the construction of the attachment plug without departing from the spirit of the invention and therefore I do not wish to be limited to the exact details as shown and described.

Having thus described the invention, what is claimed and desired to be secured by Letters Patent is:

1. A device for attaching a dry cell to an incandescent lamp holder having a socket therein, said device comprising electrical contacts adapted to fit into the socket of said holder and to electrically connect the same to the terminals of said dry cell.

2. In an attachment plug for use in connecting a dry cell to an incandescent lamp socket having a central contact and a screw threaded shell contact, the combination of an insulating body, a threaded metal shell on said body connecting to one of the terminals on the dry cell and adapted to fit into the threaded shell contact of the lamp socket, and a center metal contact on said insulating body connecting with the other terminal of said dry cell and adapted to engage with the central contact of said incandescent lamp socket.

3. In an attaching plug for use in connecting an ordinary dry cell having a side terminal and a center terminal to an ordinary incandescent lamp receptacle having a socket fitted with a central contact and a screw threaded shell contact, the combination of an insulating body carrying a screw shell adapted to fit into the shell of the lamp receptacle, means for connecting the screw shell on said body to one of said terminals of the dry cell, a central contact carried by said body, and adapted to engage the central contact of said lamp receptacle, and means for connecting said central contact on the body to the other terminal of the dry cell.

4. In an attaching plug for use in connecting an ordinary dry cell having a side zinc terminal and a center carbon terminal to an ordinary incandescent lamp receptacle having a socket fitted with a central contact and a screw threaded shell contact, the combination of an insulating body carrying a screw shell adapted to fit into the shell of the lamp receptacle, means for connecting the screw shell on said body to one of said terminals of the dry cell, a central contact

carried by said body, and adapted to engage the central contact of said receptacle, and means for connecting said central contact on the body to the other terminal of the dry cell comprising a screw threaded sleeve.

5. In an attaching plug of the class described, the combination of an insulating body having a central bore, a threaded shell mounted on said body, a connecting member attached to said shell, a screw fitting in said bore and having a head at the outer end constituting the center contact of said plug, and a threaded sleeve connected to the inner end of said screw and provided with means for mounting the plug on a terminal of a dry cell.

6. In an attaching plug for electrically and mechanically connecting a dry cell having center and side terminals to an incandescent lamp socket, the combination of an insulating body having a central bore, a threaded shell mounted on said body for mechanically and electrically connecting the plug to the threaded portion of a lamp socket, a connecting member attached to said shell, extending outside the margin of said insulating body and laterally thereof and constituting means for electrically connecting said shell to one terminal of a cell, a screw fitting in said bore and having a head at the outer end constituting a center contact for said plug, a threaded sleeve connected to the inner end of said screw, and a clip carried by said threaded sleeve and constituting means for electrically connecting the sleeve to the other terminal of the cell.

7. In an attaching plug for connecting a dry cell to a lamp socket or receptacle, the combination of an insulating body provided with a central bore and having a shoulder intermediate its ends, a threaded sleeve on the outer side of said body and having one edge thereof extending beneath said shoulder, a terminal plate connected to said shell and having a free end extending laterally from said body for attachment to a terminal of the cell, a screw fitting in the bore of said body and having a head constituting the central contact of said plug, a terminal sleeve extending into said bore and held therein by said screw, and means on said sleeve for attaching the plug to a terminal of the cell.

8. The combination with an ordinary incandescent lamp socket, of a cell having a center terminal and a side terminal, and means for electrically connecting said cell to the contacts of the lamp socket comprising an insulating body having a part fitting in the lamp socket and carrying conducting means attached to the center and side terminals of said cell.

9. A device for mechanically and electrically connecting a dry cell to an incandescent lamp holder having a socket with the usual lamp contacts therein, said device comprising an insulating body, metal parts mechanically secured to said body and adapted to fit in said socket and to be electrically connected to the lamp contacts therein and to the terminals of a cell, and also adapted to mechanically connect the cell to the lamp holder.

In testimony whereof I affix my signature.

CHAS. ERNEST YOUMANS.