(19) Europäisches Patentamt
European Patent Office
Office européen des brevets

(11) Publication number : **0 348 489 B1**

(12) # EUROPEAN PATENT SPECIFICATION

(45) Date of publication of patent specification : **03.03.93 Bulletin 93/09**

(51) Int. Cl.[5] : **E02D 29/02**

(21) Application number : **89901721.4**

(22) Date of filing : **06.01.89**

(86) International application number : **PCT/GB89/00006**

(87) International publication number : **WO 89/06296 13.07.89 Gazette 89/15**

(54) **EARTH STABILISATION.**

(30) Priority : **07.01.88 GB 8800309**

(43) Date of publication of application : **03.01.90 Bulletin 90/01**

(45) Publication of the grant of the patent : **03.03.93 Bulletin 93/09**

(84) Designated Contracting States : **AT BE CH DE FR GB IT LI LU NL SE**

(56) References cited :
EP-A- 0 130 949
FR-A- 2 303 121
GB-A- 2 014 221
GB-B- 1 069 361

(56) References cited :
Civil Engineering, no. 10, October 1979, (London, GB), N.W.M. John: "Soil reinforcement", pages 47-53
Civil Engineering, November-December 1985, (London, GB), "Reinforced earth - application and development", pages 53-57

(73) Proprietor : **SOCIETE CIVILE DES BREVETS DE HENRI VIDAL**
Tour Horizon Qual De Dion Bouton
F-92806 Puteaux Cedex (FR)

(72) Inventor : **VIDAL, Henri**
8 bis, boulevard Maillot
F-92200 Neuilly-sur-Seine (FR)

(74) Representative : **Plesold, Alexander J. et al**
Frank B. Dehn & Co. Imperial House 15-19 Kingsway
London WC2B 6UZ (GB)

EP 0 348 489 B1

Note : Within nine months from the publication of the mention of the grant of the European patent, any person may give notice to the European Patent Office of opposition to the European patent granted. Notice of opposition shall be filed in a written reasoned statement. It shall not be deemed to have been filed until the opposition fee has been paid (Art. 99(1) European patent convention).

Description

This invention concerns improvements in or relating to reinforcements for use in stabilised earth structures.

The technique of stabilising earth structures by incorporation of spaced flexible reinforcements in the earth mass has become well-established. out in British Patent No. 1069361 of Henri Vidal and a large number of structures of this kind have been build all over the world. The reinforcements stabilise the mass virtually completely by frictional forces, both between the reinforcements and the adjacent fill particles and between those particles and the remainder of the fill. The reinforcements are so spaced that such frictional forces are transmitted throughout the fill and tension generated in the reinforcements opposes significant horizontal movement of the fill particles.

The tensile strength of the reinforcements must be sufficient to withstand the horizontal forces generated by the weight of the fill and any loads placed thereon, such as a road and road traffic. In order to retain the elastic properties of the stabilised earth structure, it is necessary that any modified form of the reinforcement should be flexible, in order to retain frictional contact with the fill and accommodate earth movements. It has been found that an earth mass stabilised in this way can be built with vertical sides up to substantial heights and the earth behaves as a material having predetermined elastic properties capable of accommodating significant vertical settling movements without failure.

An unstabilised block of earth has a tendency to fail in the well known way first described by Coulomb along a plane from the foot of the block at an angle of $\alpha = \pi/4 + \phi/2$ (where ϕ is the angle of friction), normally about 63° to the horizontal. The mass of earth above this plane is often termed the "Coulomb wedge" or "active wedge". In older techniques, where a vertical wall was required, this was provided by a relatively massive wall structure at the vertical face resisting overturning primarily by its weight. Using the techniques of British Patent No. 1069361, the vertical sides of the earth block merely need protection from erosion and are commonly provided with relatively thin cladding elements attached to the exposed ends of the reinforcements.

The reinforcements used in the technique of British Patent 1069361 are, most efficiently, strips but differently shaped reinforcements are possible provided they are capable of mobilising frictional forces adequate to stabilise the mass. The strips or other reinforcements are generally incorporated in the fill in layers, the structure normally being built up by placing a layer of spaced strips on a flat compacted layer of earth, compacting a further layer of fill on top of the strips and placing a further layer of strips, this procedure being continued until the structure has reached the required height.

It is found that the presence of the reinforcements according to the Vidal technique changes the properties of the earth mass to the extent that the boundary of the active wedge is substantially nearer to the vertical face of the mass than in the case of unreinforced earth. Recent experiments have shown that, surprisingly, the position of the boundary of the active wedge, which is, in fact, the line of maximum tension in the reinforcements, runs almost parallel to the vertical face, except for the region near the foot of the structure. Thus it has been found that the boundary of the active zone lies, for the greater part of the structure, at a distance about 0.28H (± 0.02H) from the face (where H is the height of the structure).

In such a structure, the reinforcements have always had a length of at least 0.7H which means that a length of reinforcement of at least 0.4H extended beyond the active wedge into the resisting zone, i.e. the zone not liable to failure. In low or medium height walls, the length of the reinforcements is normally greater relative to height, e.g. 0.7 to 1.2H, so that in such cases even more of the reinforcement lies in the resisting zone and simply serves to mobilise sufficient friction in the earth mass to resist movement of the stabilised active wedge. The surface area of reinforcement in contact with the fill is calculated to ensure that the reinforcements cannot be pulled out. Substantial safety factors are always applied, however, and it has not been previously appreciated how little of the length of the reinforcements lay in the active wedge.

The reinforcements have always been designed to present a substantially uniform frictional surface over their length. Typically these have been strips of stainless or galvanised steel, sometimes provided with transverse bars to increase frictional contact. When it is appreciated that only 0.3H of the length of the reinforcement is required to stabilise the active wedge and the remainder, amounting to 0.4H or more, functions simply to retain the reinforcement in the zone behind the active wedge, the retaining zone, it becomes possible to consider alternative ways of retaining the rearward parts of the reinforcements in the retaining zone which might result in savings of materials and hence costs. It will be appreciated that the length of the reinforcements contributes significantly to the cost of the structure both. in terms of the material of the reinforcements and also the depth of fill which has to be moved and compacted to construct the wall.

It is believed that in any stablised earth structure, the flexible reinforcements should extend to a distance of least 0.45H, preferably at least 0.5H, in order maintain the desired characteristics of the mass except near the toe of the structure, where this could be reduced to 0.35H or, more preferably, 0.4H. Beyond a distance of 0.8H however, it is now believed that fric-

tional contact with the fill is unnecessary even in low walls.

As indicated above, previous designs have used reinforcements of length 0.7H or greater and having uniform characteristics along their length. It has now been found possible to use shorter reinforcements, for example having a length of 0.65H or less, more preferably about 0.5H, provided the reinforcements are designed to ensure their retention in the retaining zone. It is thus possible to provide in the active zone, only sufficient frictional contact between the reinforcements and the earth to stabilise the active zone (with applied safety factors) while designing the rearward section of the reinforcements to resist pulling out of the retaining zone. This can be acheived by abandoning the concept of using reinforcements having uniform properties over their whole length and designing them with a stabilising zone and a retaining zone having different frictional characteristics.

The point of maximum tension in such reinforcements will in general lie at a distance about 0.3H from the front end. However, since the reinforcements will, in general, be designed to be used in building walls of various heights, the position of this point will vary according to the intended use. Nevertheless, it can be stated as a generalisation that this point will normally lie in the central 1/3 of the length of the reinforcement. In considering the different frictional properties of the reinforcement on either side of the point of maximum tension it is therefore convenient to consider only the portions of the reinforcement on either side of this central section.

It is known from GB-A-2 014 221 to provide a stabilised earth structure having a front face and comprising layers of substantially horizontal reinforcements extending from the said front face rearwards, layers of compacted earth being between said layers of reinforcements, said reinforcements including means for mobilising a frictional force between the reinforcements and the earth in the rear 1/3 of the length of said reinforcements that is greater than the frictional force mobilised between the reinforcements and the earth in the front 1/3 of the length of said reinforcements, so that the frictional forces mobilised by the reinforcements create a tension therein which is sufficient to stabilise the active zone of the structure while being less than the tensile strength and pull-out resistance of the reinforcements. In the known structure, the reinforcements are in the form of strips having a rear part with turned down strip portions to increase the efficiency of interaction of the strips with the surrounding earth. Thus the plan area of the rear part of the strips is less than the plan area of the front part thereof.

It is known from EP-A-0 130 949 (Figure 14) to provide a reinforcing strip made of woven fabric which terminates at its rear end in a round part. To form the round part, the strip branches into two portions each of half the width of the undivided strip.

The present invention is characterised in that said means includes the rear ⅓ of the length of said reinforcements having a plan area which is greater than the plan area of the front ⅓ of the length thereof, and in that L/H is equal to or less than 0.65, where L is the length of the reinforcements and H is the height of the structure.

In this way, the reinforcements can be shorter from front to rear than conventional reinforcements, thereby saving on the material used for the reinforcements (commonly steel) and/or on the volume of fill handled in building the wall.

Another way of stating above frictional requirement is that the product of the coefficient of friction of the reinforcement with earth times the area of both sides of the section of reinforcement concerned (hereafter called the "frictional capacity") of the rear 1/3 of the reinforcement is greater than that of the front 1/3. The ratio of the frictional capacity of the rear 1/3 to the front 1/3 is preferably at least 1.33, but advantageously not greater than 4.0.

While the reinforcement can be any of the types suitable for use in the Vidal technique, it is preferably a strip. The material of the reinforcement may also vary. High tension metals are preferred, e.g. steel; however, suitable precautions must be taken against corrosion, e.g. by galvanisation or other coating means.

If desired, the strip can carry ribs which increase its frictional interaction, as in British Patent 1563317.

The differences in frictional capacity between the front and rear sections of the reinforcement is achieved by increasing the area of the rear 1/3, and can be assisted by differences in surface profile (as in the above ribbed strip). In one embodiment of the invention, a reinforcement can consist of a front section consisting of a single length of strip which will in general be over 1/3 the length of the reinforcement, joined to two lengths of strip at a single junction i.e. a Y configuration. If the junction is at the mid point, the length of strip material used is about 1 1/2 times that of a straight strip of the same length from the front to rear. On the other hand the latter strip would have half the frictional capacity in the rearward retaining section and a second such strip would have to be used to provide as much resistance to pull-out forces as a Y - reinforcement according to the invention. There is thus a net saving of steel of about 25%.

Alternatively, one can compare the new Y - reinforcement with a longer single strip having the same area and hence the same pull out resistance. This will be 50% longer and thus require 50% more fill to be handled in building the wall.

It will be appreciated that the same advantages apply to other reinforcements according to the inven-

tion which are invariably shorter than conventional uniform reinforcements having the same pull-out resistance.

A further possibility is simply to construct the rear section of the reinforcement of wider strip material i.e. to join a narrower front section of strip to a wider rear section.

It will be appreciated that in the structure of the invention, the reinforcements are shorter than conventional uniform reinforcements having the same frictional capacity per unit length as the front 1/3 section of the reinforcements used according to the invention, provided the same number of reinforcements is used in each case. As indicated above, this can result in a considerable saving in the amount of fill handled and, in many cases, the volume of earth excavated to accommodate the wall.

In general the line of maximum tension in the reinforcements in such a structure will be in substantially the same position as in a conventional Vidal structure i.e. at about 0.3H.

The invention is particularly applicable to low or medium height walls for example from 4 to 15 metres in height or for the upper 15 metre sections of high walls. Over that range, the ratio of the length of the reinforcements L to the height of the wall H is conventionally from 1.3 to 0.7. It is found that, in a structure according to the invention, L/H can be significantly reduced. On the other hand, it is necessary to consider the function of the stabilised earth wall as a gravity wall which must resist overturning forces. In general L/H should not be reduced below 0.45, preferably not below 0.50. While, in theory, the number of reinforcements can be varied infinitely, in practice any stabilised earth construction system will use standard panels having uniform appearance and possessing a limited number of points for attachment of reinforcements. This leads to a tendency for lower walls actually to have a greater ratio L/H than higher walls. In such cases L/H, in systems according to the invention, may well be higher than 0.5; in general, however, L/H will not be above 0.65. In some cases L/H may not be the same throughout the structure but will be less for reinforcements near the toe, e.g. as low as 0.4 or even 0.35, provided the stability of the structure is maintained.

In general, in order to ensure adequate frictional interaction in the active zone, it is desirable that in this zone, at least 2%, and preferably at least 5% of the area of the bed of earth on which each layer of reinforcements is laid is covered by the material of the reinforcements and that there are at least 4 such layers in the structure.

The invention is now described by way of illustration only with reference to the accompanying drawings in which;

Figure 1 shows in plan view one embodiment of a reinforcement according to the invention; and Figure 2 shows a further embodiment of a reinforcement according to the invention.

Figure 3 shows in diagrammatic section a stabilised earth structure according to the invention.

In the reinforcement shown in Figure 1, the front section 1, consisting of 60 x 5 mm plain galvanised steel strip, is jointed by a bolt 2 to two sections 3 and 4 of 60 x 5 mm ribbed high adherence strip (also galvanised steel). The front end of the reinforcement is secured by a further bolt 5 to the tab 6 embedded in a concrete facing unit 7.

If the reinforcements form part of a 10.5 metre wall, L/H can be 0.5 and the point of maximum tension will be at about 0.3 x 10.5 metres i.e. at about 3 metres. The plain section 1 should therefore, in such a structure, be 3 metres in length. The two sections 3 and 4 may be 2.5 metres in length. In terms of pull-out resistance, this is equivalent to two ribbed high adherence strips having the same length of strip rearward of the point of maximum tension i.e. 2.5 metres. The total length of 2 such strips would thus be 2 x 5.5 metres. The saving in steel which may be acheived is thus of the order of one third. Alternatively, it can be seen that the strip according to the invention is equivalent to a single ribbed high adherence strip having the same length of strip rearward of the point of maximum tension as the two 2.5 metre lengths shown in Figure 1, the total length of such a strip thus being 3 + 2 x 2.5 = 8 metres. This would require the depth of fill to be increased by 2.5 metres with considerable increase in overall cost.

In the reinforcement shown in Figure 2, the integral front section 8 consists of 3 metres of 60 x 5 mm plain strip which is integral with a rear section 9 consisting of 120 x 5 mm strip carrying transverse ribs to increase adherence. In performance it is thus similar to the embodiment of Figure 1.

In the wall shown in Figure 3, the line 10 joins points of maximum friction in the reinforcements 11 according to the invention. The ends of the reinforcements 12 define the rear of the wall. The line 13 shows the position of the ends of conventional reinforcements of the same material as the front sections of the reinforcements according to the invention (used in the same numbers and spacing). The line of maximum tension 10 is approximately the same in both cases.

Claims

1. A stabilised earth structure having a front face (7) and comprising layers of substantially horizontal reinforcements (11) extending from the said front face rearwards, layers of compacted earth being between said layers of reinforcements, said reinforcements including means for mobilising a frictional force between the reinforcements and the

earth in the rear 1/3 of the length (3,4,9) of said reinforcements that is greater than the frictional force mobilised between the reinforcements and the earth in the front 1/3 of the length (1,8) of said reinforcements, so that the frictional forces mobilised by the reinforcements create a tension therein which is sufficient to stabilise the active zone of the structure while being less than the tensile strength and pull-out resistance of the reinforcements, characterised in that said means includes the rear 1/3 of the length (3,4,9) of said reinforcements (11) having a plan area which is greater than the plan area of the front 1/3 of the length (1,8) thereof, and in that L/H is equal to or less than 0.65, where L is the length of the reinforcements and H is the height of the structure.

2. A stabilised earth structure as claimed in claim 1, having reinforcements (11) comprising a front section (1) consisting of a single length of strip joined to two lengths of strip (3,4) at a single junction (2) to define a "Y" configuration.

3. A stabilised earth structure as claimed in claim 1, having reinforcements (11) comprising a rear section (9) formed of wider strip material than that forming a narrower front section (8).

4. A stabilised earth structure as claimed in claim 1, 2 or 3, wherein the front section length of strip (1,8) is over 1/3 the length of the reinforcement (11).

5. A stabilised earth structure as claimed in any preceding claim, wherein the structure is between 4 and 15 metres in height.

6. A stabilised earth structure as claimed in any preceding claim, wherein in the active zone of the structure at least 2% of the area of the bed of earth on which each layer of reinforcements (11) is laid is covered by the material of the reinforcements, and wherein the structure has at least four such layers.

7. A flexible reinforcement (11) for use in a stabilised earth structure as claimed in claim 1, the reinforcement comprising a front section (1) consisting of a single length of strip joined to two lengths of strip (3,4) at a single junction (2) to define a "Y" configuration, the rear 1/3 of the length of the reinforcement having a plan area which is greater than the plan area of the front 1/3 of the length of the reinforcement.

8. A flexible reinforcement (11) for use in a stabilised earth structure as claimed in claim 1, the reinforcement comprising a rear section (9) formed of wider strip material than that forming a narrower front section (8).

Patentansprüche

1. Stabilisierter Erdaufbau mit einer Vorderseite (7), der Lagen von im wesentlichen horizontalen Verstärkungen (11) umfaßt, die sich von der Vorderseite nach hinten erstrekken, wobei Schichten von verdichtetem Erdreich zwischen den Verstärkungslagen liegen und die Verstärkungen Einrichtungen zum Mobilisieren einer Reibungskraft zwischen den Verstärkungen und dem Erdreich im hinteren Drittel der Länge (3,4,9) der Verstärkungen aufweisen, die größer ist als die Reibungskraft, die zwischen den Verstärkungen und dem Erdreich im vorderen Drittel der Länge (1,8) der Verstärkungen mobilisiert wird, so daß die Reibungskräfte, die durch die Verstärkungen mobilisiert werden, eine Spannung darin erzeugen, die ausreichend ist, um die aktive Zone des Erdbaus zu stabilisieren, während sie geringer ist als die Zugfestigkeit und der Auszugswiderstand der Verstärkungen,
dadurch gekennzeichnet,
daß diese Einrichtungen das hintere Drittel der Länge (3,4,9) der Verstärkungen (11) mit einem Flächenbereich umfassen, der größer ist, als der Flächenbereich des vorderen Drittels der Länge (1,8) davon, und daß L/H gleich oder kleiner ist als 0,65, wobei L die Länge der Verstärkungen und H die Höhe des Aufbaus ist.

2. Stabilisierter Erdaufbau nach Anspruch 1, mit Verstärkungen (11), die einen Vorderabschnitt (1) umfassen, der aus einem einzelnen Längsstück eines Streifens besteht, der mit zwei Längsstücken eines Streifens (3,4) an einer einzelnen Verbindungsstelle (2) zur Ausbildung einer Y-Gestalt verbunden ist.

3. Stabilisierter Erdaufbau nach Anspruch 1, mit Verstärkungen (11), die einen hinteren Abschnitt (9) umfassen, der aus einem breiteren Streifenmaterial als dem gebildet ist, das einen schmäleren Vorderabschnitt (8) bildet.

4. Verstärkter Erdaufbau nach Anspruch 1, 2 oder 3,
wobei der vordere Längsabschnitt des Streifens (1,8) über ein Drittel der Länge der Verstärkung (11) ausmacht.

5. Stabilisierter Erdaufbau nach einem der vorhergehenden Ansprüche,
wobei der Aufbau zwischen 4 und 15 m Höhe hat.

6. Stabilisierter Erdaufbau nach einem der vorhergehenden Ansprüche, wobei in der aktiven Zone des Aufbaus wenigstens 2 % des Bereichs des Erdbettes, auf dem jede Lage von Verstärkungen (11) liegt, durch das Material der Verstärkungen abgedeckt ist, und wobei der Aufbau wenigstens 4 solcher Lagen hat.

7. Flexible Verstärkung (11) zur Verwendung in einem stabilisierten Erdaufbau nach Anspruch 1, wobei die Verstärkung einen Vorderabschnitt (1) umfaßt, der aus einem einzelnen Längsstück eines Streifens besteht, der mit zwei Längsstücken eines Streifens (3,4) an einer einzelnen Verbindungsstelle (2) verbunden ist, um eine Y-Gestalt zu bilden, wobei das hintere Drittel der Länge der Verstärkung einen Flächenbereich hat, der größer ist als der Flächenbereich des vorderen Drittels des Längsstückes der Verstärkung.

8. Flexible Verstärkung (11) zur Verwendung in einem stabilisierten Erdaufbau nach Anspruch 1, wobei die Verstärkung einen hinteren Abschnitt (9) umfaßt, der aus einem breiteren Streifenmaterial gebildet ist als dem, das einen schmaleren vorderen Abschnitt (8) bildet.

Revendications

1. Structure de terre stabilisée ayant une face frontale (7) et comprenant des couches de renforcement (11) sensiblement horizontales et s'étendant vers l'arrière à partir de la face frontale, des couches de terre compactées entre les couches de renforcement, les renforcements comprenant des moyens destinés à mobiliser une force de frottement entre les renforcements et la terre dans le tiers arrière de la longueur (3,4,9) de ces renforcements, qui est supérieure à la force de frottement mobilisée entre les renforcements et la terre dans le tiers avant de la longueur (1,8) de ces renforcements, de manière que les forces de frottement mobilisées par les renforcements y créent une tension qui est suffisante pour stabiliser la zone active de la structure, tout en étant inférieure à la résistance de traction et d'arrachement des renforcements, caractérisée en ce que les moyens incluent le fait que le tiers arrière de la longueur (3,4,9) des renforcements (11) a une surface en plan qui est supérieure à la surface en plan du tiers avant de leur longueur (1,8), et le fait que L/H soit égal ou inférieur à 0,65, L étant la longueur des renforcements et H la hauteur de la structure.

2. Structure de terre stabilisée suivant la revendication 1, ayant des renforcements (11) comprenant une section avant (11) consistant en un seul tronçon de bande réuni à deux tronçons de bande (3,4) en une jonction (2) unique pour définir une configuration en "Y".

3. Structure de terre stabilisée suivant la revendication 1, ayant des renforcements (11) comprenant une partie (9) arrière formée de matériau en bande plus large que celle formant une section (8) avant plus étroite.

4. Structure de terre stabilisée suivant la revendication 1, 2 ou 3, dans laquelle le tronçon de la partie avant de la bande (1,8) s'étend sur plus du tiers de la longueur du renforcement (11).

5. Structure de terre stabilisée suivant l'une quelconque des revendications précédentes, dans laquelle la structure a une hauteur comprise entre 4 et 15 mètres.

6. Structure de terre stabilisée suivant l'une quelconque des revendications précédentes, dans laquelle, dans la zone active de la structure, au moins 2 % de la surface du lit de terre sur laquelle est posée chaque couche de renforcement (11) est recouverte du matériau de renforcement, et la structure a au moins quatre couches de ce genre.

7. Renforcement (11) souple, destiné à être utilisé dans une structure de terre stabilisée suivant la revendication 1, le renforcement comprenant une section (1) avant consistant en un tronçon unique de bande réuni à deux tronçons de bande (3,4) en une jonction (2) unique pour définir une configuration en "Y", le tiers arrière de la longueur du renforcement ayant une surface en plan qui est supérieure à la surface en plan du tiers avant de la longueur du renforcement.

8. Renforcement (11) souple, destiné à être utilisé dans une structure de terre stabilisée suivant la revendication 1, le renforcement comprenant une partie (9) arrière en un matériau pour bande plus large que celui formant une partie (8) frontale plus étroite.

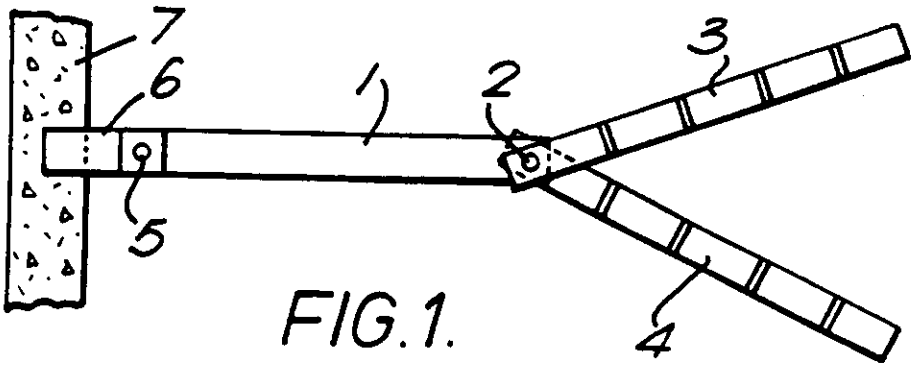

FIG.1.

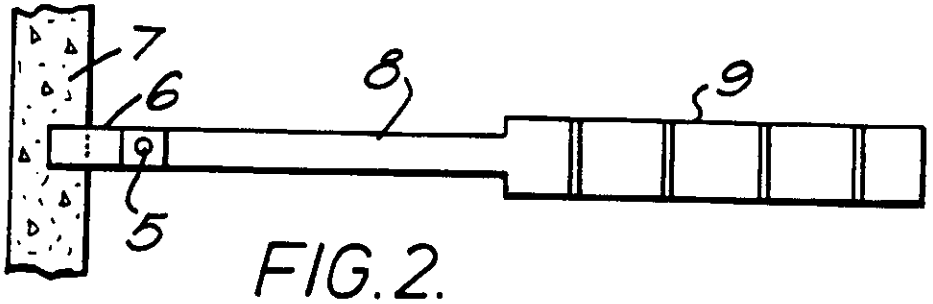

FIG.2.

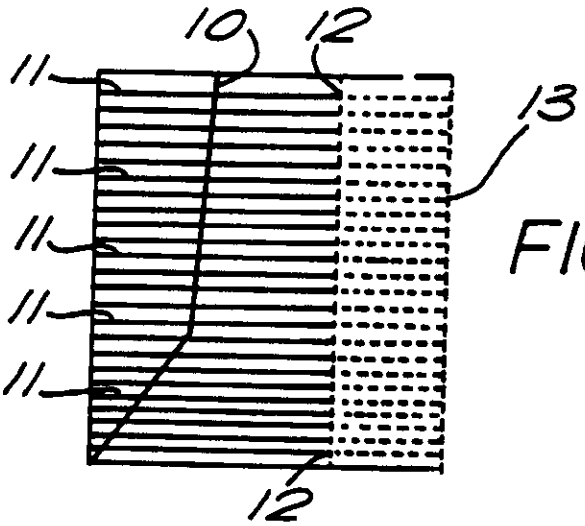

FIG.3.

REGISTER ENTRY FOR EP0348489

European Application No EP89901721.4 filing date 06.01.1989

Priority claimed:
07.01.1988 in United Kingdom - doc: 8800309

PCT EUROPEAN PHASE
PCT Application PCT/GB89/00006 Publication No WO89/06296 on 13.07.1989

Designated States BE CH DE FR GB IT LI LU NL SE AT

Title EARTH STABILISATION.

Applicants/Proprietors
HENRI VIDAL, 8 bis, Boulevard Maillot, F-92200 Neuilly-sur-Seine, France [ADP No. 50545128001]

MICHAEL JOHN HOLMES, Frank B. Dehn & Co. Imperial House 15-19 Kingsway, London WC2B 6UZ, United Kingdom [ADP No. 57106064001]

Inventor
HENRI VIDAL, 8 bis, boulevard Maillot, F-92200 Neuilly-sur-Seine, France [ADP No. 57106072001]

Classified to
E02D

Address for Service
ALEXANDER J. PIESOLD, Frank B. Dehn & Co. Imperial House 15-19 Kingsway, London WC2B 6UZ, United Kingdom [ADP No. 56779820001]

EPO Representative
ALEXANDER J. PIESOLD, Frank B. Dehn & Co. Imperial House 15-19 Kingsway, London WC2B 6UZ, United Kingdom [ADP No. 56779820001]

Publication No EP0348489 dated 03.01.1990
Publication in English

Examination requested 10.01.1990

Patent Granted with effect from 03.03.1993 (Section 25(1)) with title EARTH STABILISATION.

29.04.1991 Notification from EPO of change of Applicant/Proprietor details
from HENRI VIDAL, 8 bis, Boulevard Maillot, F-92200 Neuilly-sur-Seine, France [ADP No. 50545128001]
MICHAEL JOHN HOLMES, Frank B. Dehn & Co. Imperial House 15-19 Kingsway, London WC2B 6UZ, United Kingdom [ADP No. 57106064001]
to MICHAEL JOHN HOLMES, Frank B. Dehn & Co. Imperial House 15-19 Kingsway, London WC2B 6UZ, United Kingdom [ADP No. 57106064001]
SOCIÉTÉ CIVILE DES BREVETS HENRI VIDAL, Incorporated in France, Tour Horizon Quai De Dion Bouton, F-92806, Puteaux Cedex, France [ADP No. 06880397001]
Entry Type 10.1 Staff ID. MH Auth ID. BACK

01.05.1992 Notification from EPO of change of Applicant/Proprietor details
from

to
SOCIETE CIVILE DES BREVETS DE HENRI VIDAL, Tour Horizon Quai De Dion Bouton, F-92806 Puteaux Cedex, France [ADP No. 58507294001]
Entry Type 25.14 Staff ID. RD06 Auth ID. EPT

02.05.1992 The entry dated 01.05.1992 is incomplete and incorrect and should state Notification from EPO of change of Applicant/Proprietor details from MICHAEL JOHN HOLMES, Frank B. Dehn & Co. Imperial House 15-19 Kingsway, London WC2B 6UZ, United Kingdom
[ADP No. 57106064001]
SOCIÉTÉ CIVILE DES BREVETS HENRI VIDAL, Incorporated in France, Tour Horizon Quai De Dion Bouton, F-92806, Puteaux Cedex, France
[ADP No. 06880397001]
to SOCIÉTÉ CIVILE DES BREVETS HENRI VIDAL, Tour Horizon Quai De Dion Bouton, F-92806, Puteaux Cedex, France
[ADP No. 58507294001]
Entry Type 10.1 Staff ID. MH Auth ID. BACK

10.11.1995 Application under Section 32(2)(d) filed 27.10.1995
Entry Type 10.1 Staff ID. MH Auth ID. F11

14.11.1995 Application under Section 32(2)(d) allowed
Entry Type 11.1 Staff ID. MH Auth ID. F11

14.11.1995 Notification of change of Applicant/Proprietor address of SOCIÉTÉ CIVILE DES BREVETS HENRI VIDAL, Incorporated in France, Tour Horizon Quai De Dion Bouton, F-92806, Puteaux Cedex, France
[ADP No. 06880397001]
to
SOCIÉTÉ CIVILE DES BREVETS HENRI VIDAL, Incorporated in France, 36,avenue Raymond Poincaré, 75116, Paris, France
[ADP No. 06880397002]
dated 27.10.1995. Written notification filed on EP0348489
Entry Type 7.3 Staff ID. MH Auth ID. EO

**** END OF REGISTER ENTRY ****

RENEWAL DETAILS

PUBLICATION NUMBER EP0348489

PROPRIETOR(S)

Société Civile des Brevets Henri Vidal, Incorporated in France, 36, avenue Raymond Poincaré, 75116, Paris, France

DATE FILED 06.01.1989

DATE GRANTED 03.03.1993

DATE NEXT RENEWAL DUE 06.01.1997

DATE NOT IN FORCE

DATE OF LAST RENEWAL 02.01.1996

YEAR OF LAST RENEWAL 08

STATUS PATENT IN FORCE

**** END OF REPORT ****