US 20140021002A1

(19) United States

(12) Patent Application Publication

(10) Pub. No.: US 2014/0021002 A1

(43) Pub. Date: Jan. 23, 2014

Guo

(54) LOCK CLUTCHES AND METHODS OF MAKING AND USING THEREOF

(71) Applicant: **Scyan Electronics LLC**, Issaquah, WA (US)

(72) Inventor: **Yan Guo**, Issaquah, WA (US)

(21) Appl. No.: **13/943,797**

(22) Filed: **Jul. 17, 2013**

Related U.S. Application Data

(60) Provisional application No. 61/672,771, filed on Jul. 18, 2012.

Publication Classification

(51) **Int. Cl.**
F16D 11/16 (2006.01)

(52) **U.S. Cl.**
CPC *F16D 11/16* (2013.01)
USPC **192/71**

(57) **ABSTRACT**

A clutch mechanism, comprising a first clutch shaft, a second clutch shaft, a clutch driver shaft, and a follower, wherein the first clutch shaft and the second clutch shaft are configured to rotate concentrically, wherein the first clutch shaft and the second clutch shaft are configured to be operably coupled by the follower, wherein the clutch driver shaft is configured to be coupled to the follower in such a way that the rotation of the clutch driver shaft is configured to produce a linear reciprocating motion on the follower.

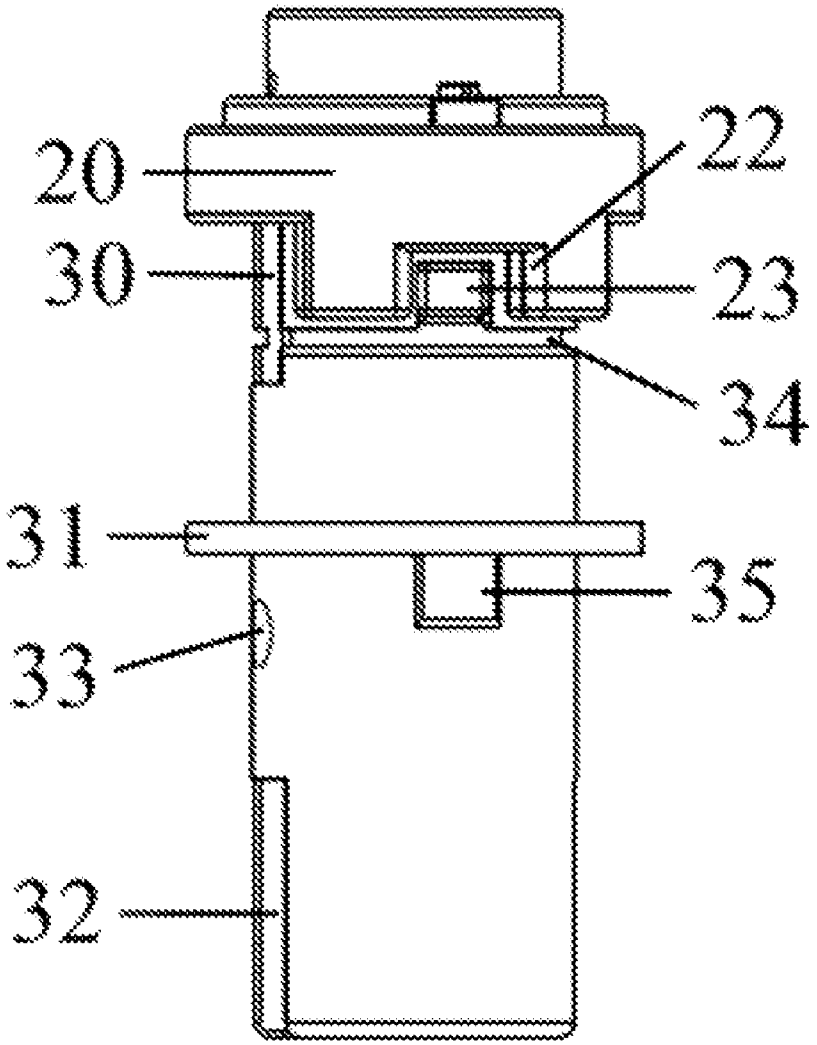

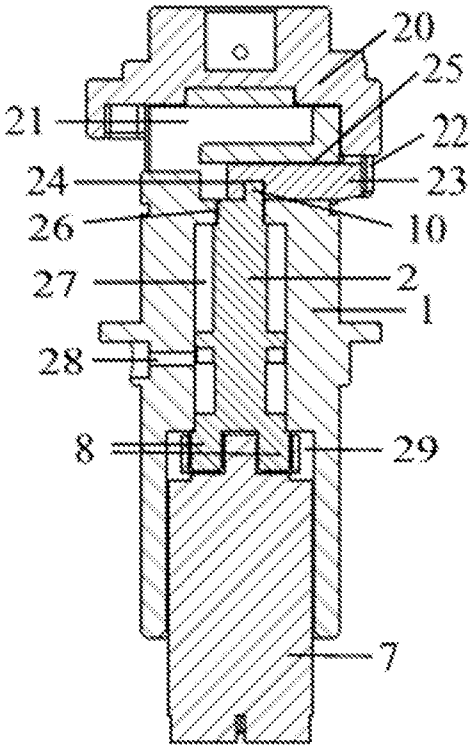

FIGURE 1

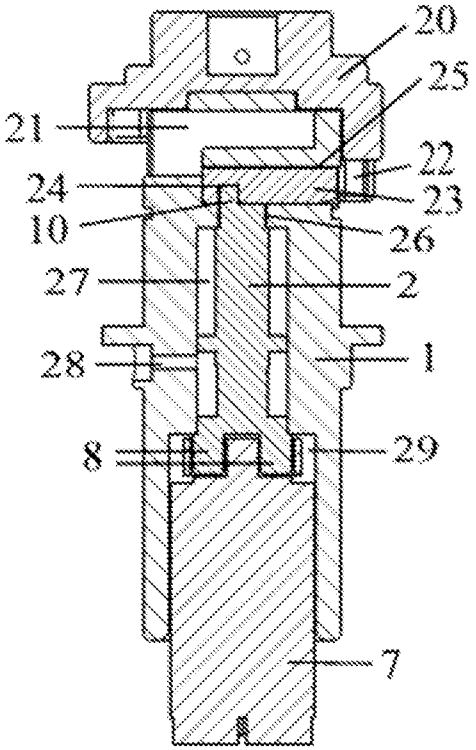

FIGURE 2

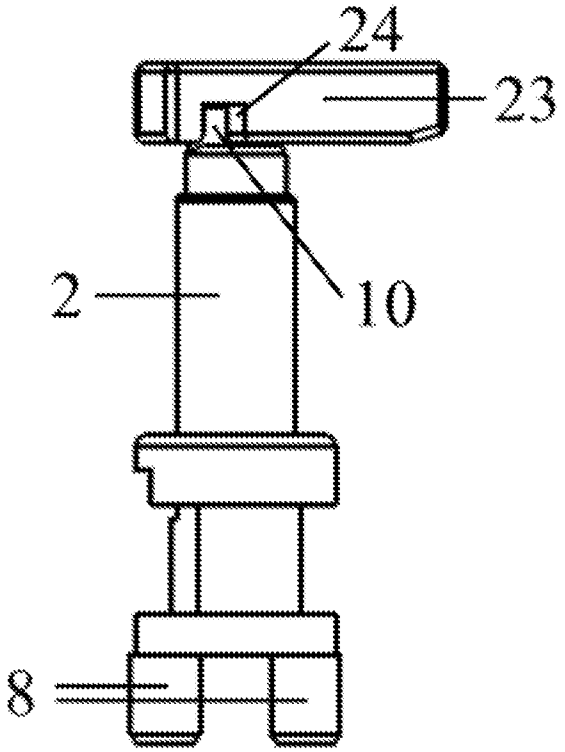

FIGURE 3

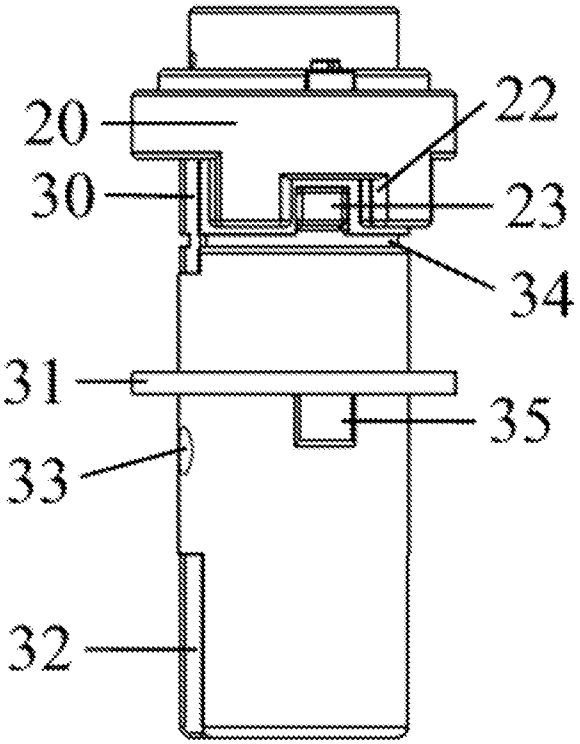

FIGURE 4

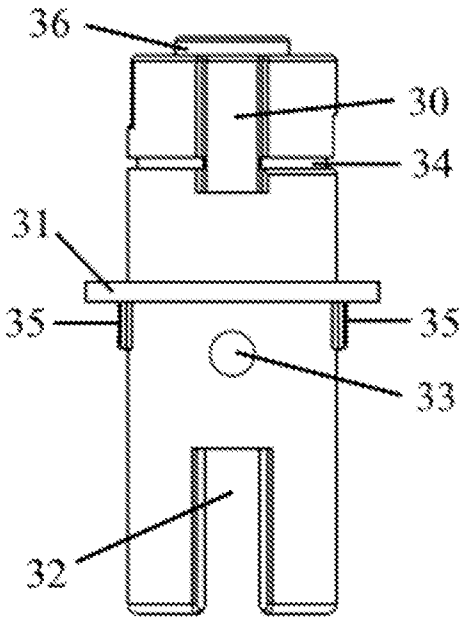

FIGURE 5

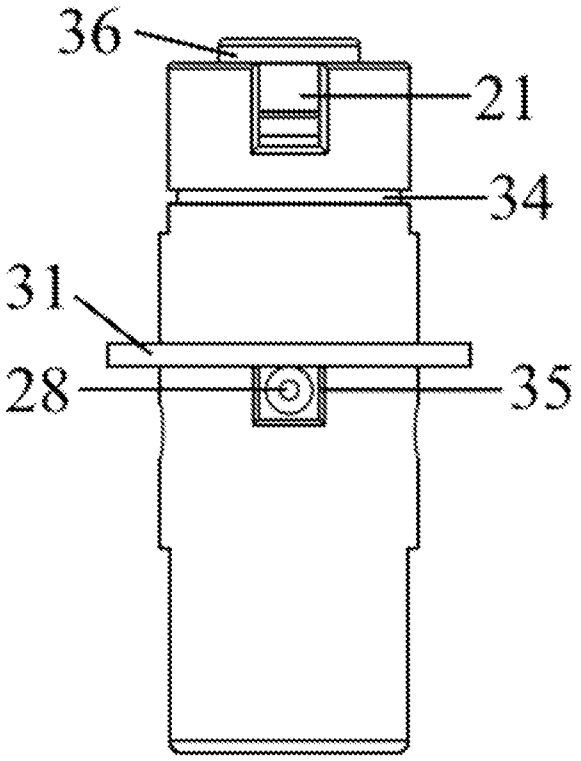

FIGURE 6

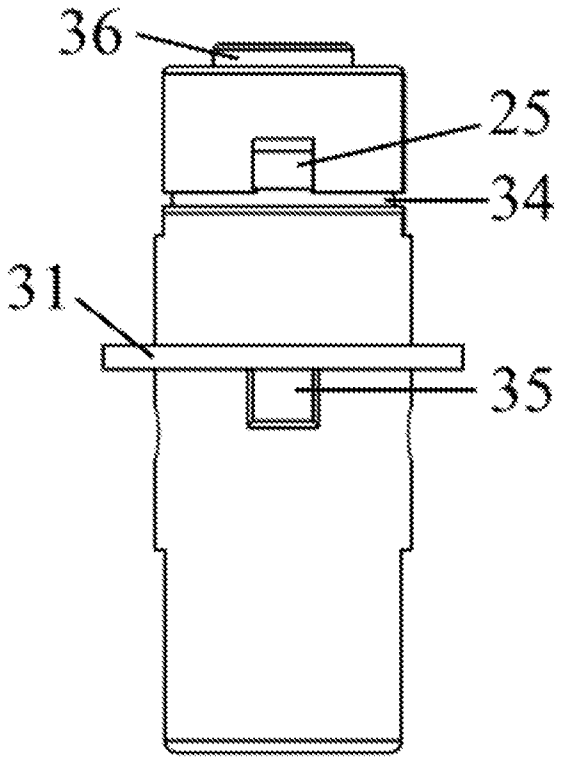

FIGURE 7

LOCK CLUTCHES AND METHODS OF MAKING AND USING THEREOF

CROSS REFERENCE TO RELATED APPLICATIONS

[0001] This application claims the benefit of the filing date of U.S. Provisional Application Ser. No. 61/672,771 filed Jul. 18, 2012 under 35 U.S.C. 119(e), the entire disclosure of which is incorporated by reference herein.

TECHNICAL FIELD

[0002] This disclosure relates generally to lock systems, apparatuses, and devices for providing a latching and locking function.

BACKGROUND

[0003] Unless otherwise indicated herein, the materials described in this section are not prior art to the claims in this application and are not admitted to be prior art by inclusion in this section.

[0004] A lock is a mechanical or an electronic device for restricting access to an enclosed property. More specifically, the lock is adapted to protect against forced and surreptitious entry to the enclosed property or the particular area. The lock may be used on a door, furniture, a vehicle, a container such as a storage box or a bike.

[0005] A clutch mechanism inside a lock system often functions to converting a torque power, such as a rotation, into a linear movement, which leads to coupling or uncoupling of various components in the lock therefore locking or unlocking the lock system.

SUMMARY

[0006] The following summary is illustrative only and is not intended to be in any way limiting. In addition to the illustrative aspects, embodiments, and features described above, further aspects, embodiments, and features will become apparent by reference to the drawings and the following detailed description.

[0007] In one aspect, the disclosure provides clutches for locks. In one embodiment, the clutch includes a first clutch shaft, a second clutch shaft, and a clutch driver shaft. The first clutch shaft and the second clutch shaft may be configured to rotate concentrically. The first clutch shaft and the second clutch shaft are configured to be operably coupled by a follower. The clutch driver shaft may be coupled to the follower in such a way that the rotation of the clutch driver shaft is configured to produce a linear reciprocating motion on the follower.

[0008] In one embodiment, the first clutch shaft may have a first opening and is configured to receive at least a portion of the second clutch shaft. The second clutch shaft may have a slot. The first opening and the slot are configured to align when rotating the first clutch shaft, the second clutch shaft, or both.

[0009] In one embodiment, the clutch driver shaft may have a first end and a second end. The clutch driver shaft may be operably coupled to a follower at the first end and may be rotationally coupled to a lock cylinder at the second end. The follower is configured to be slidably received in the first opening and the slot. The rotation of a lock cylinder is configured to cause the rotation of the clutch driver shaft, which in turn is configured to produce a linear reciprocating motion on the follower sliding the follower partially into or retracting the follower out of the first opening through the slot when the first opening and the slot are aligned.

[0010] When the follower is retracted out of the first opening, the first clutch shaft and the second clutch shaft are operably decoupled and therefore configured to rotate independently. When the follower is silded partially into the first opening, the first clutch shaft and the second clutch shaft are operably coupled and therefore configured to rotate together.

[0011] In one embodiment, the first end may have a first structure eccentrically located. In one embodiment, the follower may have a second structure. The first structure and the second structure are configured to couple with each other. For example, the first structure may be a protruding structure; and the second structure may be an indenting structure. The second indenting structure is configured to mate with the first protruding structure coupling the clutch driver shaft and the follower so that rotation of the clutch driver shaft may be converted to a linear reciprocating motion on the follower. In one embodiment, the protruding structure may be cylindrically shaped.

BRIEF DESCRIPTION OF THE DRAWINGS

[0012] The foregoing and other features of this disclosure will become more fully apparent from the following description and appended claims, taken in conjunction with the accompanying drawings. Understanding that these drawings depict only several embodiments arranged in accordance with the disclosure and are, therefore, not to be considered limiting of its scope, the disclosure will be described with additional specificity and detail through use of the accompanying drawings, in which:

[0013] FIG. **1** is a cutaway view of a representative clutch, in which the first clutch shaft (**20**) and the second clutch shaft (**1**) are connected;

[0014] FIG. **2** is a cutaway view of the representative clutch of FIG. **1**, in which the first clutch shaft (**20**) and the second clutch shaft (**1**) are disconnected

[0015] FIG. **3** shows a representative clutch driver shaft (**2**) interacting with a representative follower (**23**);

[0016] FIG. **4** shows a representative first clutch shaft (**20**) interacting with a representative second clutch shaft (**1**);

[0017] FIG. **5** shows a side view of a representative second clutch shaft (**1**);

[0018] FIG. **6** shows a side view of a representative second clutch shaft (**1**); and

[0019] FIG. **7** shows a side view of a representative second clutch shaft (**1**).

DETAILED DESCRIPTION

[0020] In the following detailed description, reference is made to the accompanying drawings, which form a part hereof. In the drawings, similar symbols typically identify similar components, unless context dictates otherwise. The illustrative embodiments described in the detailed description, drawings, and claims are not meant to be limiting. Other embodiments may be utilized, and other changes may be made, without departing from the spirit or scope of the subject matter presented herein. It will be readily understood that the aspects of the present disclosure, as generally described herein, and illustrated in the Figures, can be arranged, substi-

tuted, combined, separated, and designed in a wide variety of different configurations, all of which are explicitly contemplated herein.

[0021] This disclosure is generally drawn, among others, to clutching mechanisms, locks containing the clutching mechanism, and methods, apparatus, systems, and/or devices related to the locks and the clutching mechanism clutches. For example, the present disclosure relates generally to lock systems which may be employed with entry control devices to control access through a door or to furniture. The clutch mechanisms and lock systems containing the clutching mechanisms provided in this disclosure may have the advantage of, without limitation, simple, durable, easy to use, and low production cost.

[0022] In one aspect, clutches for locks are provided. In one embodiment, as shown in FIGS. **1** and **2**, the clutch includes a first clutch shaft (**20**), a second clutch shaft (**1**), and a clutch driver shaft (**2**). The first clutch shaft (**20**) has a first opening (**22**) and is configured to receive at least a portion of the second clutch shaft (**1**). The first clutch shaft (**20**) and the second clutch shaft (**1**) are configured to rotate concentrically. The second clutch shaft (**1**) has a slot (**25**). When rotating the first clutch shaft (**20**), the second clutch shaft (**1**), or both, the first opening (**22**) and the slot (**25**) may be aligned.

[0023] In one embodiment, the clutch driver shaft (**2**) may have a first end and a second end. The clutch driver shaft (**2**) is coupled to a follower (**23**) at the first end and is rotationally coupled to a lock cylinder (**7**) at the second end. The follower (**23**) is configured to be slidably received in the first opening (**22**) and the slot (**25**). The rotation of a lock cylinder (**7**) causes the rotation of the clutch driver shaft (**2**), which produces a linear reciprocating motion on the follower (**23**) sliding the follower (**23**) partially into or retracting the follower (**23**) out of the first opening (**22**) through the slot (**25**) when they are aligned.

[0024] When the follower (**23**) is retracted out of the first opening (**22**), the first clutch shaft (**20**) and the second clutch shaft (**1**) are operably decoupled and therefore configured to rotate independently. When the follower (**23**) is silded partially into the first opening (**22**), the first clutch shaft (**20**) with the second clutch shaft (**1**) are operably coupled and therefore configured to rotate together.

[0025] In one embodiment, the first end of the clutch driver shaft (**2**) may have a first structure (**10**) eccentrically located. In one embodiment, the follower (**23**) may have a second structure (**24**). The first structure (**10**) and the second structure are configured to couple with each other. For example, as shown in FIG. **3**, the clutch driver shaft (**2**) may have a first protruding structure (**10**) at the first end. The protruding structure (**10**) may or may not be cylindrically shaped. The first protruding structure (**10**) may be eccentrically located. The follower (**23**) may have an indenting structure (**24**). The indenting structure (**24**) may be configured to mate with the first protruding structure (**10**) coupling the clutch driver shaft (**2**) with the follower (**23**). Because the first protruding structure (**10**) is eccentrically located, the rotation of the clutch driver shaft (**2**) is configured to be converted to a linear reciprocating motion on the follower (**23**).

[0026] At least a portion of the follower (**23**) may be received in the slot (**25**) and may continue into the first opening (**22**). Through the coupling between the clutch driver shaft (**2**) and the follower (**23**), the rotation of the clutch driver shaft (**2**) is configured to produce a linear motion on the follower (**23**) sliding the follower (**23**) at least partially into or retracting the follower (**23**) out of the first opening (**22**) through the slot (**25**) when two are aligned.

[0027] When the follower (**23**) is retracted out of the first opening (**22**), the first clutch shaft (**20**) is operably uncoupled from the second clutch shaft (**1**), as shown in FIG. **2**. The first clutch shaft (**20**) and the second clutch shaft (**1**) are configured to rotate independently. When the follower (**23**) is slided at least partially into the first opening (**22**), the first clutch shaft (**20**) is operably coupled to the second clutch shaft (**1**), as shown in FIG. **1**, causing the first clutch shaft (**20**) and the second clutch shaft (**1**) to be configured to rotate together.

[0028] In one embodiment, at the second end, the clutch driver shaft (**2**) may be coupled to a lock cylinder (**7**) so that the rotation of the lock cylinder (**7**) causes the rotation of the clutch driver shaft (**2**). For example, as shown in FIGS. **1** and **2**, the clutch driver shaft (**2**) may have a second protruding structure (**8**) at the second hand; and the lock cylinder (**7**) may have an indenting structure. The second protruding structure (**8**) may mate with the indenting structure coupling the lock cylinder (**7**) to the clutch driver shaft (**2**). Therefore, when a user uses a key to rotate the lock cylinder (**7**), the clutch driver shaft (**2**) rotates, through the follower (**23**), operably coupling or uncoupling the first clutch shaft (**20**) and the second clutch shaft (**1**).

[0029] In another aspect, the disclosure provides lock systems having the above described clutches and clutch mechanisms. The lock systems may be a door lock, a furniture lock, a vehicle lock, or a bike lock.

[0030] In a further aspect, the disclosure provides doors, furniture, bikes, buildings, apparatus, devices, and systems having locks with the above described clutches and clutch mechanisms.

[0031] In the above detailed description, reference is made to the accompanying drawings, which form a part hereof. In the drawings, similar symbols typically identify similar components, unless context dictates otherwise. The illustrative embodiments described in the detailed description, drawings, and claims are not meant to be limiting. Other embodiments may be used, and other changes may be made, without departing from the spirit or scope of the subject matter presented herein. It will be readily understood that the aspects of the present disclosure, as generally described herein, and illustrated in the Figures, may be arranged, substituted, combined, separated, and designed in a wide variety of different configurations, all of which are explicitly contemplated herein.

[0032] The herein described subject matter sometimes illustrates different components contained within, or connected with, different other components. It is to be understood that such depicted architectures are merely exemplary, and that in fact many other architectures may be implemented which achieve the same functionality. In a conceptual sense, any arrangement of components to achieve the same functionality is effectively "associated" such that the desired functionality is achieved. Hence, any two components herein combined to achieve a particular functionality may be seen as "associated with" each other such that the desired functionality is achieved, irrespective of architectures or intermedial components. Likewise, any two components so associated may also be viewed as being "operably connected", or "operably coupled", to each other to achieve the desired functionality, and any two components capable of being so associated may also be viewed as being "operably couplable", to each other to achieve the desired functionality. Specific examples of operably couplable include but are not limited to physically

mateable and/or physically interacting components and/or wirelessly interactable and/or wirelessly interacting components and/or logically interacting and/or logically interactable components. In addition, the "operably coupled," "operably connected," "coupled," or "connected" may be either directly coupled or connected or indirectly coupled or connected.

[0033] In the above detailed description, reference is made to the accompanying drawings, which form a part hereof. In the drawings, similar symbols typically identify similar components, unless context dictates otherwise. The illustrative embodiments described in the detailed description, drawings, and claims are not meant to be limiting. Other embodiments may be used, and other changes may be made, without departing from the spirit or scope of the subject matter presented herein. It will be readily understood that the aspects of the present disclosure, as generally described herein, and illustrated in the Figures, may be arranged, substituted, combined, separated, and designed in a wide variety of different configurations, all of which are explicitly contemplated herein.

[0034] As used in this document, the singular forms "a," "an," and "the" include plural references unless the context clearly dictates otherwise. Unless defined otherwise, all technical and scientific terms used herein have the same meanings as commonly understood by one of ordinary skill in the art. Nothing in this disclosure is to be construed as an admission that the embodiments described in this disclosure are not entitled to antedate such disclosure by virtue of prior disclosure.

[0035] It will be understood by those within the art that, in general, terms used herein, and especially in the appended claims (e.g., bodies of the appended claims) are generally intended as "open" terms (e.g., the term "including" should be interpreted as "including but not limited to," the term "having" should be interpreted as "having at least," the term "includes" should be interpreted as "includes but is not limited to," etc.). While various compositions, methods, and devices are described in terms of "comprising" various components or steps (interpreted as meaning "including, but not limited to"), the compositions, methods, and devices can also "consist essentially of" or "consist of" the various components and steps, and such terminology should be interpreted as defining essentially closed-member groups.

[0036] Various of the above-disclosed and other features and functions, or alternatives thereof, may be combined into many other different systems or applications. Various presently unforeseen or unanticipated alternatives, modifications, variations or improvements therein may be subsequently made by those skilled in the art, each of which is also intended to be encompassed by the disclosed embodiments.

What is claimed is:

1. A clutch for a lock, comprising a first clutch shaft, a second clutch shaft, a clutch driver shaft, and a follower, wherein the first clutch shaft and the second clutch shaft are configured to rotate concentrically, wherein the first clutch shaft and the second clutch shaft are configured to be operably coupled by the follower, wherein the clutch driver shaft is configured to be coupled to the follower in such a way that the rotation of the clutch driver shaft is configured to produce a linear reciprocating motion on the follower.

2. The clutch of claim **1**, wherein the first clutch shaft comprises a first opening and is configured to receive at least a portion of the second clutch shaft, wherein the second clutch shaft comprises a slot, and wherein the first opening and the slot are configured to align when rotating the first clutch shaft, the second clutch shaft, or both.

3. The clutch of claim **2**, wherein the follower is configured to be slidably received at least partially in the first opening and in the slot.

4. The clutch of claim **3**, wherein the clutch driver shaft comprises a first end and a second end, and wherein the clutch driver shaft is operably coupled to the follower at the first end and rotationally coupled to a lock cylinder at the second end.

5. The clutch of claim **4**, wherein the follower is configured to be slidably received in the first opening and in the slot, and wherein the rotation of the lock cylinder is configured to cause the rotation of the clutch driver shaft, which in turn is configured to produce a linear reciprocating motion on the follower sliding the follower partially into or retracting the follower out of the first opening through the slot when the first opening and the slot are aligned.

6. The clutch of claim **5**, wherein, when the follower is retracted out of the first opening, the first clutch shaft and the second clutch shaft are operably decoupled and therefore configured to rotate independently.

7. The clutch of claim **6**, wherein, when the follower is at least partially in the first opening and in the slot, the first clutch shaft and the second clutch shaft are operably coupled and therefore configured to rotate together.

8. The clutch of claim **7**, wherein the first end of clutch driver shaft comprises a first structure, wherein the follower comprises a second structure, and wherein the first structure and the second structure are configured to couple with each other.

9. The clutch of claim **8**, wherein the first structure is eccentrically located on the first end.

10. The clutch of claim **8**, wherein the first structure comprises a protruding structure.

12. The clutch of claim **8**, wherein the second structure comprises an indenting structure.

13. The clutch of claim **10**, wherein the protruding structure may be cylindrically shaped.

14. A lock, comprising,

a first clutch shaft (**20**), wherein the first clutch shaft (**20**) has a first opening (**22**);

a second clutch shaft (**1**), wherein the first clutch shaft (**20**) is configured to receive at least a portion of the second clutch shaft (**1**), wherein the first clutch shaft (**20**) and the second clutch shaft (**1**) are configured to rotate concentrically, wherein the second clutch shaft (**1**) has a slot (**25**), and wherein the first opening (**22**) and the slot (**25**) are configured to align when rotating the first clutch shaft (**20**), the second clutch shaft (**1**), or both; and

a clutch driver shaft (**2**) having a first end and a second end, wherein the clutch driver shaft (**2**) is configured to couple to a follower (**23**) at the first end and is configured to rotationally coupled to a lock cylinder (**7**) at the second end, wherein the follower (**23**) is configured to be slidably received in the first opening (**22**) and the slot (**25**), wherein rotation of a lock cylinder (**7**) is configured to cause the rotation of the clutch driver shaft (**2**), which is configured to produce a linear motion on the follower (**23**) sliding the follower (**23**) partially into or retracting the follower (**23**) out of the first opening (**22**) through the slot (**25**) when the first opening (**22**) and the slot (**25**) are aligned.

15. The clutch of claim **14**, wherein retracting the follower (**23**) out of the first opening (**22**) and the slot (**25**) is configured

to operably uncouple the first clutch shaft (**20**) from the second clutch shaft (**1**) so that the first clutch shaft (**20**) and the second clutch shaft (**1**) are configured to rotate independently.

16. The clutch of claim **14**, wherein the follower (**23**) being at least partially in the first opening (**22**) is configured to operably couple the first clutch shaft (**20**) with the second clutch shaft (**1**) so that the first clutch shaft (**20**) and the second clutch shaft (**1**) are configured to rotate together.

17. The clutch of claim **14**, wherein the first end comprises a first protruding structure (**10**) eccentrically located on the first end, wherein the follower (**23**) comprises a first indenting structure (**24**), and wherein the first indenting structure (**24**) are configured to mate with the first protruding structure (**10**) causing rotation of the clutch driver shaft (**2**) to produce a linear motion on the follower (**23**).

18. The clutch of claim **14**, wherein the clutch driver shaft (**2**) comprises a second protruding structure (**8**), wherein the second protruding structure (**8**) is configured to mate with a second indenting structure at the lock cylinder (**7**) therefore rotationally coupling the lock cylinder (**7**) and the clutch driver shaft (**2**).

19. A door, comprising a lock, wherein the lock comprises a clutch mechanism, wherein the clutch mechanism comprises a first clutch shaft, a second clutch shaft, a clutch driver shaft, and a follower, wherein the first clutch shaft and the second clutch shaft are configured to rotate concentrically, wherein the first clutch shaft and the second clutch shaft are configured to be operably coupled by the follower, wherein the clutch driver shaft is configured to be coupled to the follower in such a way that the rotation of the clutch driver shaft is configured to produce a linear reciprocating motion on the follower.

* * * * *