(12) INTERNATIONAL APPLICATION PUBLISHED UNDER THE PATENT COOPERATION TREATY (PCT)

(19) World Intellectual Property Organization
International Bureau

(43) International Publication Date
16 August 2012 (16.08.2012)

WIPO | PCT

(10) International Publication Number
WO 2012/107863 A1

(51) International Patent Classification:
F21S 8/02 (2006.01)

(21) International Application Number:
PCT/IB2012/050490

(22) International Filing Date:
2 February 2012 (02.02.2012)

(25) Filing Language: English

(26) Publication Language: English

(30) Priority Data:
11153678.5 8 February 2011 (08.02.2011) EP

(71) Applicant *(for all designated States except US)*: **KONINKLIJKE PHILIPS ELECTRONICS N.V.** [NL/NL]; Groenewoudseweg 1, NL-5621 BA Eindhoven (NL).

(72) Inventors; and

(75) Inventors/Applicants *(for US only)*: **TIMMERS, Wilhelmus Adrianus Gerardus** [NL/NL]; c/o High Tech Campus, Building 44, NL-5656 AE Eindhoven (NL). **OEPTS, Wouter** [NL/NL]; c/o High Tech Campus, Building 44, NL-5656 AE EIndhoven (NL). **VAN KEMPEN, Frank Walterus Franciscus Marie** [NL/NL]; c/o High Tech Campus, Building 44, NL-5656 AE Eindhoven (NL).

(74) Agents: **VAN EEUWIJK, Alexander Henricus Walterus** et al.; High Tech Campus, Building 44, NL-5656 AE Eindhoven (NL).

(81) Designated States *(unless otherwise indicated, for every kind of national protection available)*: AE, AG, AL, AM, AO, AT, AU, AZ, BA, BB, BG, BH, BR, BW, BY, BZ, CA, CH, CL, CN, CO, CR, CU, CZ, DE, DK, DM, DO, DZ, EC, EE, EG, ES, FI, GB, GD, GE, GH, GM, GT, HN, HR, HU, ID, IL, IN, IS, JP, KE, KG, KM, KN, KP, KR, KZ, LA, LC, LK, LR, LS, LT, LU, LY, MA, MD, ME, MG, MK, MN, MW, MX, MY, MZ, NA, NG, NI, NO, NZ, OM, PE, PG, PH, PL, PT, QA, RO, RS, RU, RW, SC, SD, SE, SG, SK, SL, SM, ST, SV, SY, TH, TJ, TM, TN, TR, TT, TZ, UA, UG, US, UZ, VC, VN, ZA, ZM, ZW.

(84) Designated States *(unless otherwise indicated, for every kind of regional protection available)*: ARIPO (BW, GH, GM, KE, LR, LS, MW, MZ, NA, RW, SD, SL, SZ, TZ, UG, ZM, ZW), Eurasian (AM, AZ, BY, KG, KZ, MD, RU, TJ, TM), European (AL, AT, BE, BG, CH, CY, CZ, DE, DK, EE, ES, FI, FR, GB, GR, HR, HU, IE, IS, IT, LT, LU, LV, MC, MK, MT, NL, NO, PL, PT, RO, RS, SE, SI, SK, SM, TR), OAPI (BF, BJ, CF, CG, CI, CM, GA, GN, GQ, GW, ML, MR, NE, SN, TD, TG).

Published:

— *with international search report (Art. 21(3))*

[Continued on next page]

(54) **Title**: METHOD FOR COLOR MIXING

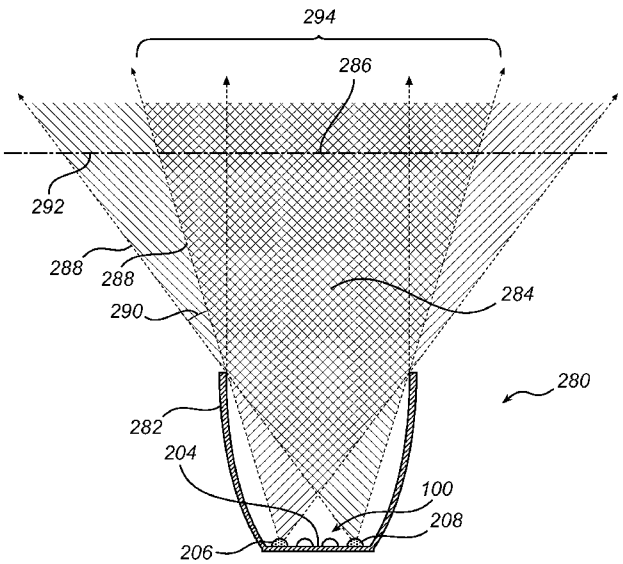

Fig. 2a

(57) **Abstract**: The present invention relates to a method for improving perceived color uniformity of light emitted by a light module (100) configured to be arranged with a spot reflector (282), the method comprising providing a first set (106) of light sources emitting light having a first dominant wavelength, providing a second set (108) of light sources emitting light having a second dominant wavelength, the second dominant wavelength being higher than the first dominant wavelength, and arranging the first and the second sets of light sources on a confined emitter area (102) of the light module, wherein each of the first and the second sets of light sources are positioned essentially symmetrically around a centre (104) of the confined emitter area, and a mean radial distance (114) from the centre is greater for the second set of light sources than for the first set of light sources. The invention also relates to a corresponding light module arranged with a spot reflector and a lighting system (280) comprising such a light module and spot reflector. Advantages with the invention include improved color uniformity of light emitted by the light module when used together with a spot reflector.

WO 2012/107863 A1

— *before the expiration of the time limit for amending the claims and to be republished in the event of receipt of amendments (Rule 48.2(h))*

Method for color mixing

TECHNICAL FIELD

The present invention relates to a method for improving perceived color uniformity of light emitted by a light module configured to be arranged with a spot reflector. The invention also relates to a corresponding light module and a lighting system comprising a light module and a spot reflector.

BACKGROUND OF THE INVENTION

Recently, much progress has been made in increasing the brightness of light emitting diodes (LEDs). As a result, LEDs have become sufficiently bright and inexpensive to serve as a light source in for example lighting system with adjustable color. By mixing differently colored LEDs any number of colors can be generated, e.g. white. Adjustable color lighting systems are typically constructed by using a number of colors, and in one example, the three primaries red, green and blue are used. The color of the generated light is determined by the LEDs that are used, as well as by the mixing ratios. To generate "white", all three LEDs have to be turned on, preferably also in combination with one or a plurality of white LEDs (e.g. blue LEDs with phosphor to convert to white light) for achieving good quality of light and for allowing variation also of the color temperature of the light. By using LEDs it is also possible to decrease the energy consumption, a requirement which is well in line with the current environmental trend.

As a further consequence of having the possibilities to provide bright light even when using compact LEDs, a number of different lighting system have been proposed greatly differing from the standard lighting system comprising a common light bulb, a fluorescent lamp or a fluorescent tube. By means of using LEDs a user is also given a more flexible control of the illumination functionalities of the lighting system, for example in relation to intensity dimming or tuning of the color temperature.

For providing a compact LED based lighting system adapted to provide bright light as well as the feature of adjustable color, the LEDs may for example be arranged onto a light module suitable for the lighting system, possibly together with a light mixing device such as a reflector. An example of such a LED based lighting module is disclosed in

US7479660. Specifically, US7479660 discloses an illumination device comprising a substrate onto which there has been arranged a red, a blue and a pair of green LEDs. The positioning of the LEDs on the substrate and in relation to each other has direct impact on the beam pattern produced by the illumination device, and a number of optical elements can be used to adjust (e.g. collimate, focus, direct) the light output of the illumination device.

However, even though US7479660 provides an exemplary implementation for a LED based lighting system adapted to provide bright light as well as adjustable color, there is no suggestion on how to position the LEDs in relation to each other, specifically when using a spot reflector for far field focusing of a light beam.

SUMMARY OF THE INVENTION

According to the invention, the above need is at least partly met by a method for improving perceived color uniformity of light emitted by a light module configured to be arranged with a spot reflector. The method comprises providing a first set of light sources emitting light having a first dominant wavelength and providing a second set of light sources emitting light having a second dominant wavelength, which second dominant wavelength is higher than the first dominant wavelength. The method furthermore comprises arranging the first and the second sets of light sources on a confined emitter area of the light module, wherein each of the first and the second sets of light sources are positioned essentially symmetrically around a centre of the confined emitter area, and a mean radial distance from the centre is greater for the second set of light sources than for the first set of light sources. In presenting a light module configured to be arranged with a spot reflector, a solution suitable for spot lighting applications arises. In general, reflectors may be utilized for reflection of all light emitted by a light module. It should be noted, however, that the present invention refers to arranging the light module to reflectors adapted for spot applications rather than to general mixing devices adapted for reflecting all light emitted by a light source.

The present invention is based on the understanding that specific problems arises when using a spot reflector as compared to a general reflector. The main difference between a spot reflector as compared to a general reflector is that the spot reflector, for example due to its generally low height, only reflects and mixes a (substantial) part of the light emitted by the light module. Accordingly, using prior art methods for positioning the light sources within the confined emitter area of the light module will result in color bands in the outer dimensions of the far field projection of the emitted light. From perception studies with regards to spot lighting, it is known that a relatively bluish ring at large beam angles is

perceived as acceptable, while a reddish ring is perceived as very annoying. Therefore, according to the invention the light sources are specifically positioned within the confined emitter area such that the first and the second sets of light sources are positioned essentially symmetrically around a centre of the confined emitter area, and a mean radial distance from the centre is greater for the second set of light sources than for the first set of light sources, thereby improving the perceived color uniformity in the far field projection of the emitted light, when using a spot reflector.

Mixing emitted light with different dominant wavelengths – i.e. light of different colors or with different color temperature – results in a reflected spot beam of a preferred color, such as e.g. white. For instance, the first set may comprise cold light sources (with a high color temperature) and the second set warm light sources (with a low color temperature), whereby the emitted light of the second dominant wavelength would be perceived as more reddish than emitted light of the first dominant wavelength. It should be noted that the respective number of light sources comprised in the first and the second sets may be arbitrarily selected, and the number of light sources in the first set may differ from the number of light sources in the second set.

Furthermore, in arranging the first and the second sets of light sources on a confined emitter area of the light module, wherein each of the first and the second sets of light sources are positioned essentially symmetrically around a centre of the confined emitter area, the strive for symmetrical distribution of the light modules enables for optimized color mixing in the far field. A light source of the first set is positioned essentially symmetrically around the centre in relation to other light sources of that same first set, while a light source of the second set is positioned essentially symmetrically around the centre in relation to other light sources of that same second set. Optimally, the first and second sets are arranged such that each set respectively has its centre of gravity in the centre. However, "absolute" symmetry is not always feasible given the circumstances of the implementation at hand, such as for instance the number of light sources to be arranged of respective set. Accordingly, a situation may arise where the light sources of the first and/or second set rather need to be arranged close to symmetrically, i.e. for instance as symmetrically as possible given the circumstances. "Essentially symmetrically" is hence in the context of this application intended to be interpreted in a broad sense, likewise including "close to symmetrically", "almost symmetrically", and "as symmetrically as possible", thus including minor deviations from absolute symmetry. With regards to the confined emitter area, this area is intended to identify an area facing the referred to spot reflector such that emitted light from the light

module may be focused and reflected. All light sources of the light module are concentrated in this area, which furthermore preferably is relatively small in order to support narrow beams. The confined emitter area may for instance be defined by an area of the light module being enclosed by said spot reflector to which the light module is configured to be arranged.

Additionally, since a mean radial distance from the centre is greater for the second set of light sources than for the first set of light sources, it is provided that light sources of the second set is underweighted close to the centre. A radial distance is the distance from the centre to a light source, whereby a mean radial distance for the second set of light sources may be defined as the mean radial distance from the centre considering all light sources of the second set. Accordingly, concerning emitted rays of the second dominant wavelength not being reflected by the spot reflector, these rays emitted by different light sources of the second set intersect with each other at a wide angle rather than a narrow angle. Subsequently, a relatively low intensity of the second dominant wavelength appears in the periphery of the beam. Thereby, a perceived reddish ring in the outer dimensions of the far field projection of the emitted light is perceptually less visible.

According to an embodiment, the method further comprises maximizing a total sum of light sources of the first and the second sets based on space restriction of the confined emitter area. Thereby, the greatest possible number of light sources which may possibly fit on the confined emitter area given the limiting dimensions thereof may be selected. Since dimensions of different light sources and/or packages in which they may be contained may vary, it is understood that the maximum number of light sources which may fit on a given confined emitter area may vary along with the selected type of light sources.

The method may further comprise selecting, out of the total sum of light sources, a relation between a respective total number of light sources of the first and the second sets based on optimized light output of the light module. Thereby, priority is given to optimized light output ahead of optimal color mixing. This may result in a light source count of the first and/or second set which may prevent the light sources from being evenly distributed around the centre. Accordingly, the selected relation may lead to that absolute symmetry may be hard to achieve for the light sources of the first and/or second set, whereby the designer may need to settle for rather arranging the respective light sources as symmetrically as possible.

According to another embodiment, the method further comprises providing a third set of light sources emitting light having a third dominant wavelength, the third dominant wavelength being lower than the first dominant wavelength. Thereby, light sources

of yet another color are utilized, and with the ability of mixing three different dominant wavelengths is hence the ability to provide a reflected spot beam of a preferred color improved even further. For instance, in order to provide white light, the light sources of the first set may be green, i.e. the first dominant wavelength emits light at the primary color green, the light sources of the second set may be red, i.e. the second dominant wavelength emits light at the primary color red, and the light sources of the third set may be blue, i.e. the third dominant wavelength emits light at the primary color blue. Preferably, the third set of light sources is positioned essentially symmetrically around the centre of the confined emitter area, and the mean radial distance from the centre is greater for the second set of light sources than for the third set of light sources.

It should be noted that the present invention by no means is restricted to two or three sets of light sources. On the contrary, an arbitrary number of different sets of light sources may be utilized. For instance, according to another example likewise providing white light, four different sets of light sources may be provided; cool white, neutral white, warm white and amber. In this case, when considering mean radial distances, the cool white and neutral white light sources may be seen as together forming a "cold group of light sources" and the warm white and amber light sources may be seen as together forming a "warm group of light sources". Thereby, a cold group mean radial distance may be defined as the mean radial distance from the centre considering all light sources of the cold group, while a warm group mean radial distance may be defined as the mean radial distance from the centre considering all light sources of the warm group. Accordingly, when considering that a mean radial distance from the centre according to the present invention should be greater for the second set of light sources than for the first set of light sources, one can in this particular case speak of a mean radial distance from the centre that should be greater for the warm group than for the cold group.

According to another aspect of the invention, there is provided a light module configured to be arranged with a spot reflector, the light module comprising a first set of light sources emitting light having a first dominant wavelength, a second set of light sources emitting light having a second dominant wavelength, the second dominant wavelength being higher than the first dominant wavelength. Furthermore, the first and the second sets of light sources are arranged on a confined emitter area of the light module, wherein each of the first and the second sets of light sources are positioned essentially symmetrically around a centre of the confined emitter area, and a mean radial distance from the centre is greater for the second set of light sources than for the first set of light sources. This aspect of the invention

provides similar advantages as discussed above in relation to the previous aspect of the invention.

According to one embodiment, light sources of the first set comprise green LEDs, light sources of the second set comprise red LEDs and light sources of the third set comprise blue LEDs. Thereby, a huge variety of colors may be provided in an effective manner, and a unique combination of the LEDs intensities give a particular desired color such as e.g. white. In general, however, the LEDs need not necessarily to be red, green and white; in alternative implementations, LEDs of the first and the third set may be of arbitrary chosen color and LEDs of the second set e.g. warm white or amber.

Furthermore, the inventive light module is preferably comprised in a lighting system further comprising a spot reflector as mentioned above and as is further discussed below.

Advantages with the invention consequently include the possibility to provide optimized color uniformity while unreflected second dominant wavelength rays emitted from different second set light sources intersect with each other at wide angles, thus reducing beam intensity at wider angles in the far field. This is achieved by positioning the light sources in a symmetrical manner with a mean distance of "reddish" light sources further from the centre of the confined emitter area as compared to other light sources. Thereby, the rays are widely spread resulting in a lower intensity of rays of the second dominant wavelength in the periphery of the beam emitted by the light source. Consequently, a perceived reddish ring in the outer dimensions of the far field projection of the emitted light is perceptually less visible.

Further features of, and advantages with the present invention will become apparent when studying the appended claims and the following description. The skilled addressee realize that different features of the present invention may be combined to create embodiments other than those described in the following, without departing from the scope of the present invention.

BRIEF DESCRIPTION OF THE DRAWINGS

The various aspects of the invention, including its particular features and advantages, will be readily understood from the following detailed description and the accompanying drawings, in which:

Fig. 1a and 1b illustrates conceptual light modules according to currently preferred embodiments of the invention;

Fig. 2a illustrates a side view of a lighting system according to an embodiment of the invention, whereas Fig 2b illustrates a corresponding prior art lighting system; and

Fig. 3 shows a flow chart of the method for improving perceived color uniformity of light emitted by the light module of Fig. 1a.

DETAILED DESCRIPTION

The present invention will now be described more fully hereinafter with reference to the accompanying drawings, in which currently preferred embodiments of the invention are shown. This invention may, however, be embodied in many different forms and should not be construed as limited to the embodiments set forth herein; rather, these embodiments are provided for thoroughness and completeness, and fully convey the scope of the invention to the skilled addressee. Like reference characters refer to like elements throughout.

Referring now to the figures and Fig. 1a in particular, there is provided a light module 100 according to a first exemplary embodiment of the invention. The dimensions and shape of the shown light module 100 are exemplifying, and other designs are naturally within the scope. The light module 100 comprises a confined emitter area 102, which area is intended to face a spot reflector (not shown) to which the light module 100 is configured to be arranged. Here, the confined emitter area 102 is adapted to be enclosed by the spot reflector, and since the light module 100 is intended for a multi-color spot lighting application, the area 102 is relatively small. There are in total sixteen light sources arranged on the confined emitter area 102, and the available space of the confined emitter area 104 is utilized such that there is no room for additional light modules. The shape and size of the shown confined emitter area 102 is exemplifying and may for other implementations be for instance circular or in the shape of a square.

The confined emitter area 102 has a centre 104, around which a first set 106, a second set 108 and a third set 110 of light sources are essentially symmetrically arranged. The first set 106 of light sources comprises six light sources adapted to emit light having a first dominant wavelength. Here, the light sources of the first set 106 are primary green LEDs. The second set 108 of light sources comprises seven light sources adapted to emit light having a second dominant wavelength, which second dominant wavelength is higher than the first dominant wavelength. Here, the light sources of the second set 108 are primary red LEDs. The third set 110 of light sources comprises three light sources adapted to emit light having a third dominant wavelength, which third dominant wavelength is lower than the

first dominant wavelength. Here, the light sources of the third set 110 are primary blue LEDs. It should be noted that according to other embodiments, naturally other light sources than LEDs may be utilized emitting light at other wavelengths than primary red, green and blue.

A first mean radial distance 112 for the first set 106 of light sources is defined as the mean radial distance from the centre 104 considering all light sources of the first set 106. A second mean radial distance 114 for the second set 108 of light sources is defined as the mean radial distance from the centre 104 considering all light sources of the second set 108. A third mean radial distance 116 for the third set 110 of light sources is defined as the mean radial distance from the centre 104 considering all light sources of the third set 110. Considering the positioning of the light sources, the second mean radial distance 114 is hence greater than the first mean radial distance 112 which is greater than the third mean radial distance 116.

In Fig. 1b, an alternative exemplifying embodiment of the present invention is illustrated. The shown light module 150 resembles the light module 100 of Fig. 1a, with the exception of sets of light sources. In Fig. 1b, the confined emitter area 152 has a centre 154 around which a first set 156, a second set 158, a third set 157 and a fourth set 159 of light sources are essentially symmetrically arranged. The first set 156 of light sources comprises six light sources adapted to emit light having a first dominant wavelength. Here, the light sources of the first set 156 are neutral white LEDs. The second set 158 of light sources comprises six light sources adapted to emit light having a second dominant wavelength, which second dominant wavelength is higher than the first dominant wavelength. Here, the light sources of the second set 158 are warm white LEDs. The third set 157 of light sources comprises two light sources adapted to emit light having a third dominant wavelength, which third dominant wavelength is slightly lower than the first dominant wavelength. Here, the light sources of the third set 157 are cold white LEDs. The fourth set 159 of light sources comprises two light sources adapted to emit light having a fourth dominant wavelength, which fourth dominant wavelength is slightly higher than the second dominant wavelength. Here, the light sources of the fourth set 159 are amber LEDs. The light sources of the second 158 and the fourth set 159 accordingly emits light perceived as "reddish", where "reddish" may be defined by CIE1976 u' of largest beam $\leq$ average CIE1976 u' beam.

Furthermore, the light sources of the first 156 and the third set 157 may be seen as together forming a "cold group of light sources" as compared to a "warm group of light sources" formed by the second 158 and the fourth set 159 of light sources. A cold group mean radial distance 162 for the cold group is defined as the mean radial distance from the

centre 154 considering all light sources of the first 156 and third set 157. Similarly, a warm group mean radial distance 164 for the warm group is defined as the mean radial distance from the centre 154 considering all light sources of the second 158 and fourth set 159. Considering the positioning of the light sources, the warm group mean radial distance 164 is hence greater than the cold group mean radial distance 162.

Fig. 2a illustrates an exemplary lighting system 280 comprising the light module 100 of Fig. 1a and a spot reflector 282. The light module 100 is configured to be arranged to the spot reflector 282, and the spot reflector 282 adapted to focus and reflect light emitted from the light module 100 into a beam 284 onto a target surface 286. The characteristics of the spot reflector 282 may vary, and its surface may for instance be facetted, segmented and/or diffusive. Furthermore, the reflector 282 may be open or closed with a window being either transparent or with scattering properties. The height of the spot reflector 282, however, is such that a substantial part of light emitted from the light module 100 is reflected. As described in connection with Fig. 1a, light sources of the second set are arranged at a greater mean radial distance from the centre 204 compared to the first and the third set. A first 206 and a second light source 208 of the second set hence have such a positioning that unreflected wide angle rays 288 of the second dominant wavelength form a relatively wide angle 290 where intersecting. The unreflected wide angle rays 288 meet with the target surface 286 at edges 292 thereof. Direct light, i.e. unreflected light, emitted by the second set light sources 206, 208 and meeting with the target surface 286 is represented by a relatively small red content area 294.

As a comparison, Fig 2b illustrates a prior art lighting system 281, which lighting system 281 comprises a light module 200 and the spot reflector 282 of Fig. 2a. Here, red LEDs 207, 209 - comparable to light sources of the second set 108 in Fig. 1a - are placed near the centre 204. Thereby, unreflected wide angle rays 289 of the second dominant wavelength form a relatively narrow angle 291 where intersecting and the unreflected wide angle rays 289 meet with the target surface 286 at edges 293 thereof. Direct light emitted by the second set light sources 207, 209 and meeting with the target surface 286 is represented by a relatively large red content area 295.

Fig. 3 shows a flow chart of the method for improving perceived color uniformity of light emitted by the light module 100 of Fig. 1a. It should be noted that some of the following steps may be performed in another order than suggested, or even simultaneously.

In a first step 310, the first set 106 of light sources emitting light having a first dominant wavelength is provided. Since the light sources of the first set 106 in Fig. 1a are green LEDs, the first dominant wavelength is hence represented by perceived green light. In a next step 320, the second set 108 of light sources emitting light having a second dominant wavelength is provided, which second dominant wavelength is higher than the first dominant wavelength. Since the light sources of the second set 108 in Fig. 1a are red LEDs, the second dominant wavelength is hence represented by perceived red light. Then, in step 330, a third set 110 of light sources emitting light having a third dominant wavelength is provided, the third dominant wavelength being lower than the first dominant wavelength. Since the light sources of the third set 110 of Fig. 1a are blue LEDs, the third dominant wavelength is hence represented by perceived blue light.

In step 340, the total sum of light sources of the first 106, the second 108 and the third sets 110 are maximized based on space restriction of the confined emitter area 102. That is, as many light sources that may possibly fit onto the confined emitter area 102 are utilized, given the dimensions of the confined emitter area 102 and space available thereon. In the exemplary embodiment of Fig. 1a, this total sum of light sources is sixteen. In a next step 350, out of the total sum of light sources, a relation between a respective total number of light sources of the first 106, the second 108 and the third sets110 are selected based on optimized light output of the light module 100. Accordingly, priority is given to optimized light output ahead of optimal color mixing. Given the maximum number of light sources that may possible fit onto the confined emitter area 102, the respective total number of light sources to be provided of each set 106, 108, 110 needs to be compromised. In Fig. 1a, selection of the relation between the respective number of light sources based on optimized light output resulted in six light sources of the first set 106 (green LEDs), seven light sources of the second set 108 (red LEDs) and three light sources of the third set 110 (blue LEDs).

In step 360, the first 106, the second 108 and the third sets 110 of light sources are arranged on the confined emitter area 102 of the light module 100. In a next step 370, each of the first 106, the second 108 and the third sets 110 of light sources are positioned essentially symmetrically around the centre 104 of the confined emitter area 102. Since, in Fig. 1a, the total sum of light sources was restricted to sixteen and the relation between the respective number of light sources of each set 106, 108, 110 due to priority of light output was "forced" to six green LEDs, seven red LEDs and three blue LEDs, absolute symmetry is not possible in this case. Accordingly, the light sources of each respective set 106, 108, 110 are instead arranged close to symmetrically, or as symmetrically as possible.

In step 380, the light sources are positioned such that the mean radial distance 114 from the centre 104 is greater for the second set 108 of light sources than for the respective mean radial distances 112, 116 of the first 106 and third sets 110 of light sources. Thereby, it is provided that light sources of the second set 108 are underweighted close to the centre 104. Accordingly, and as is illustrated in Fig. 2a, since the spot reflector 282 reflects a substantial part of the emitted light – however not all light – unreflected wide angle rays 288 of the second dominant wavelength (here perceived as red light) emitted from the two different light sources 206, 208 of the second set 108 (here red LEDs) intersect with each other at a wide angle 290 rather than a narrow angle. Thereby, the unreflected rays 288 are widely spread resulting in a lower intensity of rays of the second dominant wavelength in the periphery of the beam 284 emitted by the light sources. Subsequently, the relatively small red content area 294 on the target surface 286 resulting from direct light of the second dominant wavelength, is smaller as compared to the relatively large red content area 295 of Fig. 2b representing prior art. Accordingly, a perceived reddish ring of the emitted light in the outer dimensions, i.e. around the beam 284, of the far field projection on the target surface 286 is perceptually less visible.

Consequently, with such a method for a light module 100 configured to be arranged with a spot reflector 282, optimized light output and color uniformity is achieved in that the perceived color uniformity in the far field projection of the emitted light is improved.

In the exemplary embodiments of the present invention described above, the light sources comprise LEDs. It would however be possible, and within the scope of the present invention, to use different types of light sources, such as organic light emitting diodes (OLEDs), polymeric LEDs (PLEDs), inorganic LEDs, lasers, or a combination thereof, as well as a wide-band (direct of phosphor converted) LED and wide-band (phosphor converted) white LEDs. Furthermore, combinations with other light sources like TL, CFL are also possible.

Additionally, it should be emphasized that any combination of LED colors can produce a gamut of colors, whether the LEDs may be red, green, blue, amber, white, orange, UV or other colors. The various embodiments described throughout this specification encompass all possible combinations of LEDs comprised in the light module, such that light of varying color, intensity, saturation and color temperature can be produced.

It should be noted that the lighting system furthermore may comprise any number of optical and/or non-optical components to provide a variety of optical effects.

These components may include, but are not limited to, lenses, diffusers, and the like, used in different combinations to provide a desired effect.

Furthermore, even though the invention has been described with reference to specific exemplifying embodiments thereof, many different alterations, modifications and the like will become apparent for those skilled in the art. Variations to the disclosed embodiments can be understood and effected by the skilled addressee in practicing the claimed invention, from a study of the drawings, the disclosure, and the appended claims. Furthermore, in the claims, the word "comprising" does not exclude other elements or steps, and the indefinite article "a" or "an" does not exclude a plurality.

CLAIMS:

1. Method for improving perceived color uniformity of light emitted by a light module (100) configured to be arranged with a spot reflector (282), the method comprising:
- providing (310) a first set (106) of light sources emitting light having a first dominant wavelength,
- providing (320) a second set (108) of light sources emitting light having a second dominant wavelength, the second dominant wavelength being higher than the first dominant wavelength, and
- arranging (360) the first (106) and the second sets (108) of light sources on a confined emitter area (102) of the light module (100), wherein each of the first (106) and the second sets (108) of light sources are positioned (370) essentially symmetrically around a centre (104) of the confined emitter area (102), and a mean radial distance (114) from the centre (104) is greater (380) for the second set (108) of light sources than for the first set (106) of light sources.

2. The method according to claim 1, further comprising:
- maximizing (340) a total sum of light sources of the first (106) and the second sets (108) based on space restriction of the confined emitter area (102).

3. The method according to claim 2, further comprising:
- selecting (350), out of the total sum of light sources, a relation between a respective total number of light sources of the first (106) and the second sets (108) based on optimized light output of the light module (100).

4. The method according to anyone of the preceding claims, further comprising:
- providing (330) a third set (110) of light sources emitting light having a third dominant wavelength, the third dominant wavelength being lower than the first dominant wavelength.

5. Light module (100) configured to be arranged with a spot reflector (282), the light module (100) comprising:

- a first set (106) of light sources emitting light having a first dominant wavelength,
- a second set (108) of light sources emitting light having a second dominant wavelength, the second dominant wavelength being higher than the first dominant wavelength,

wherein the first (106) and the second sets (108) of light sources are arranged on a confined emitter area (102) of the light module (100), wherein each of the first (106) and the second sets (108) of light sources are positioned essentially symmetrically around a centre (104) of the confined emitter area (102), and a mean radial distance (114) from the centre (104) is greater for the second set (108) of light sources than for the first set (106) of light sources.

6. The light module (100) according to claim 5, wherein a total sum of light sources of the first (106) and the second sets (108) are maximized based on space restriction of the confined emitter area (102), and wherein a relation between a respective total number of light sources of the first (106) and the second sets (108), out of the total sum of light sources, is selected based on optimized light output of the light module (100).

7. The light module (100) according to claim 5 or 6, further comprising:

- a third set (110) of light sources emitting light having a third dominant wavelength, the third wavelength being lower than the first dominant wavelength.

8. The light module (100) according to claim 7, wherein light sources of the first set (106) comprise green LEDs, light sources of the second set (108) comprise red LEDs and light sources of the third set (110) comprise blue LEDs.

9. Lighting system (280), comprising:

- a light module (100) according to claim 5, and
- a spot reflector (282).

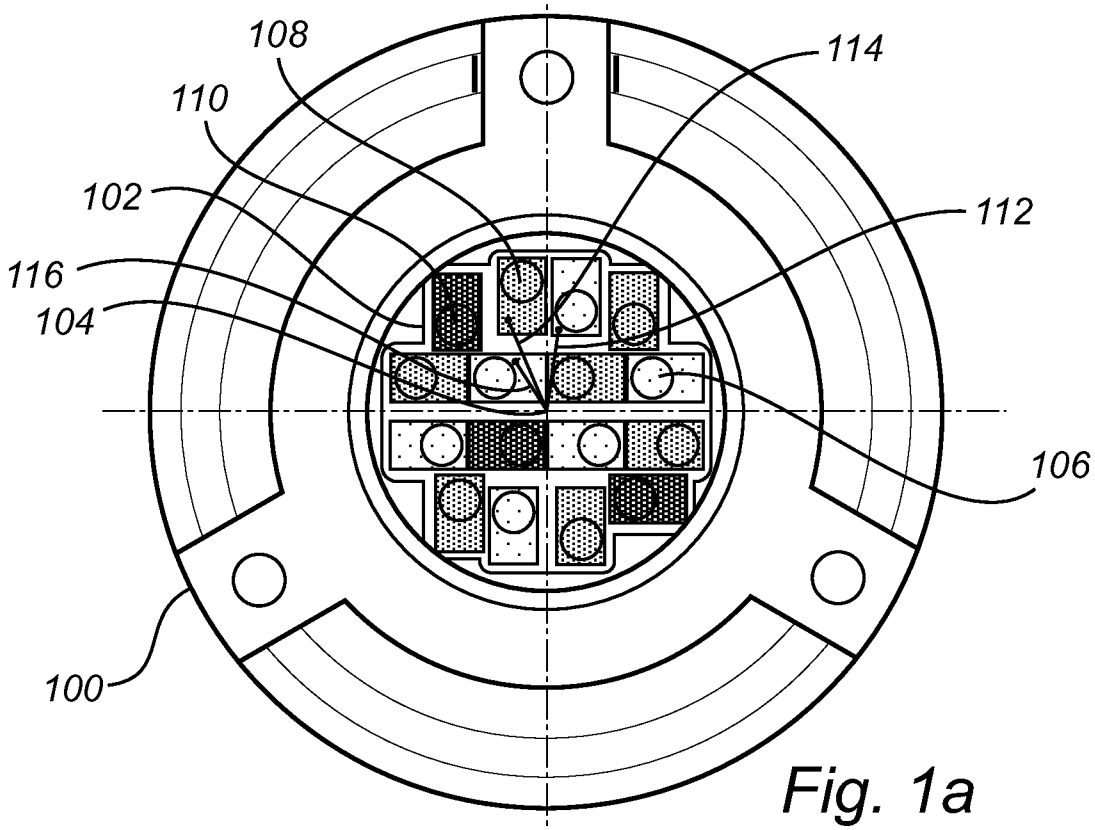
108
114
110
102
112
116
104
106
100

Fig. 1a

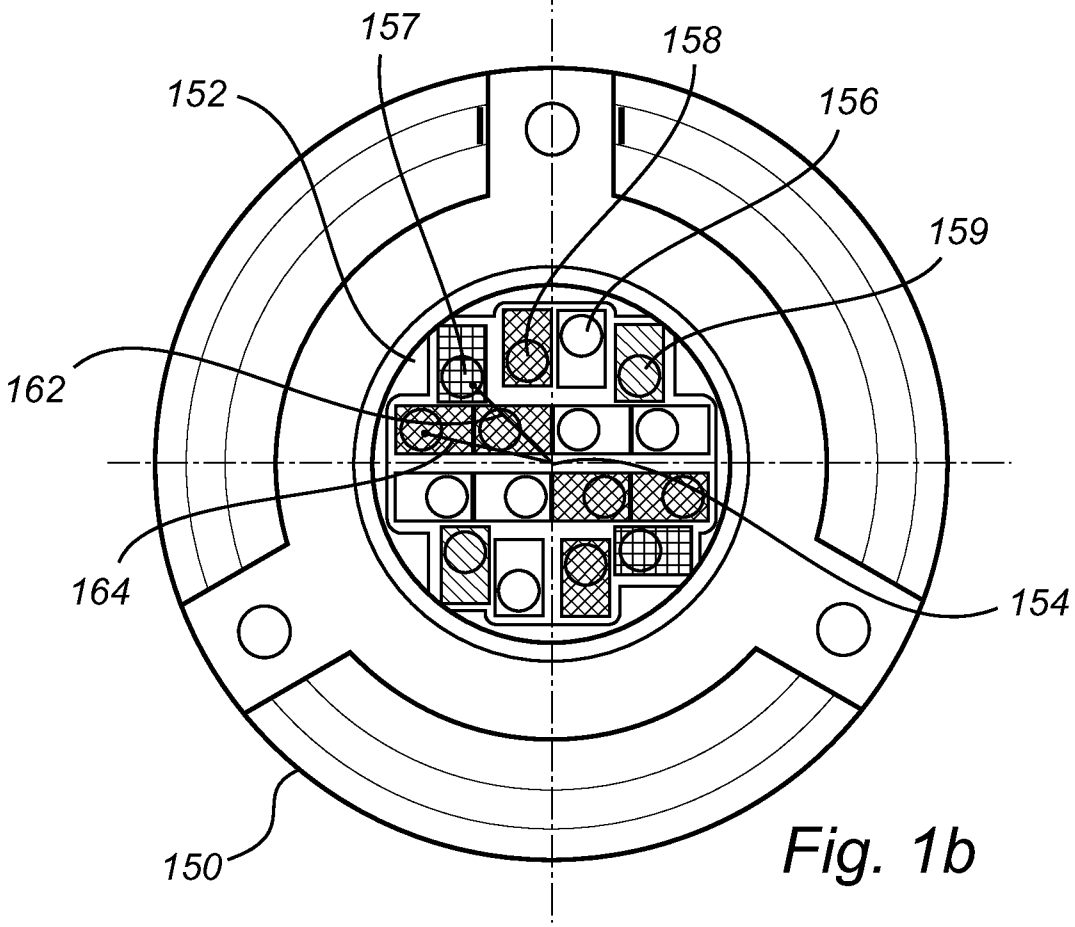
157
158
152
156
159
162
164
154
150

Fig. 1b

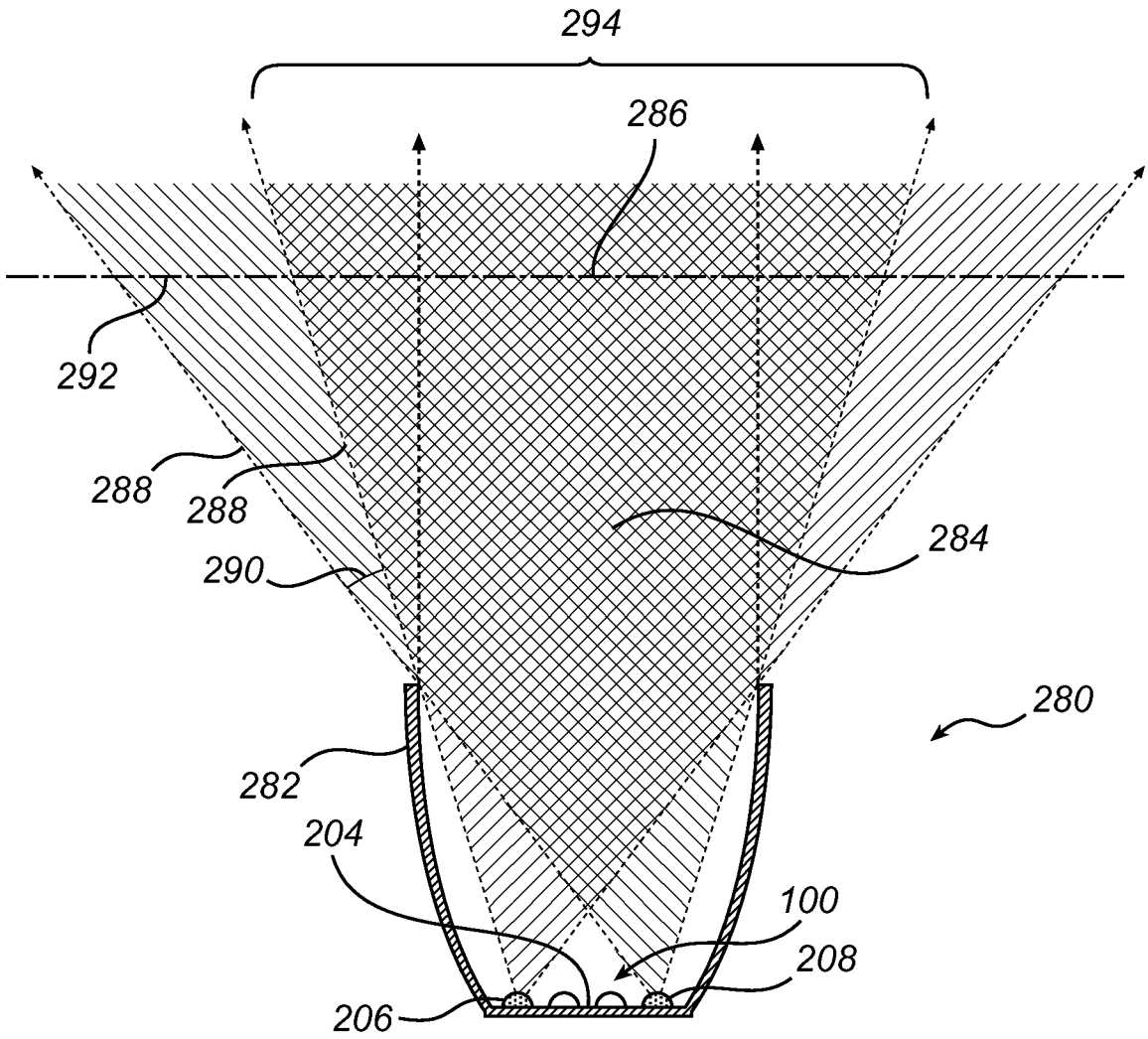

Fig. 2a

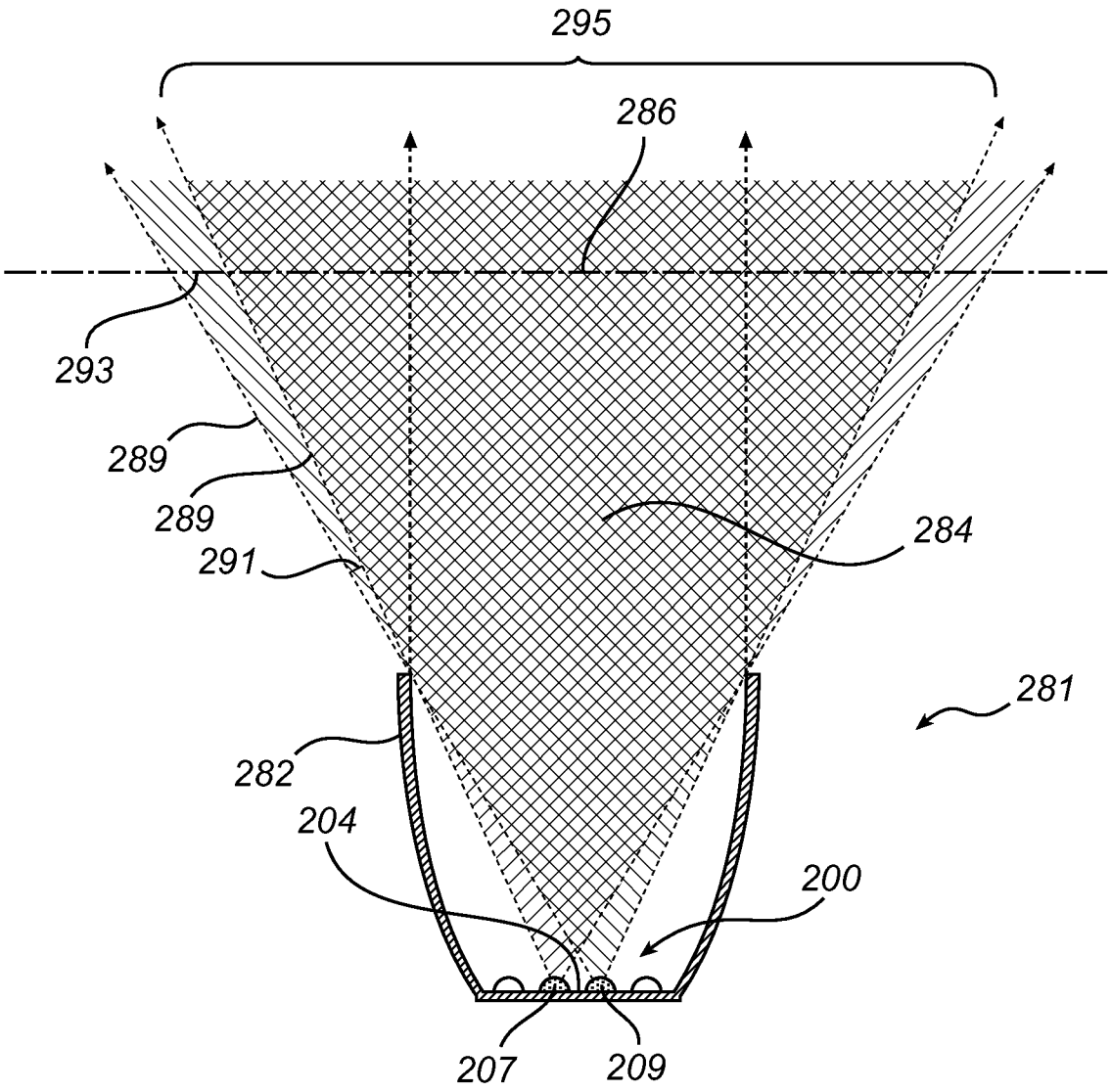

(Prior art) Fig. 2b

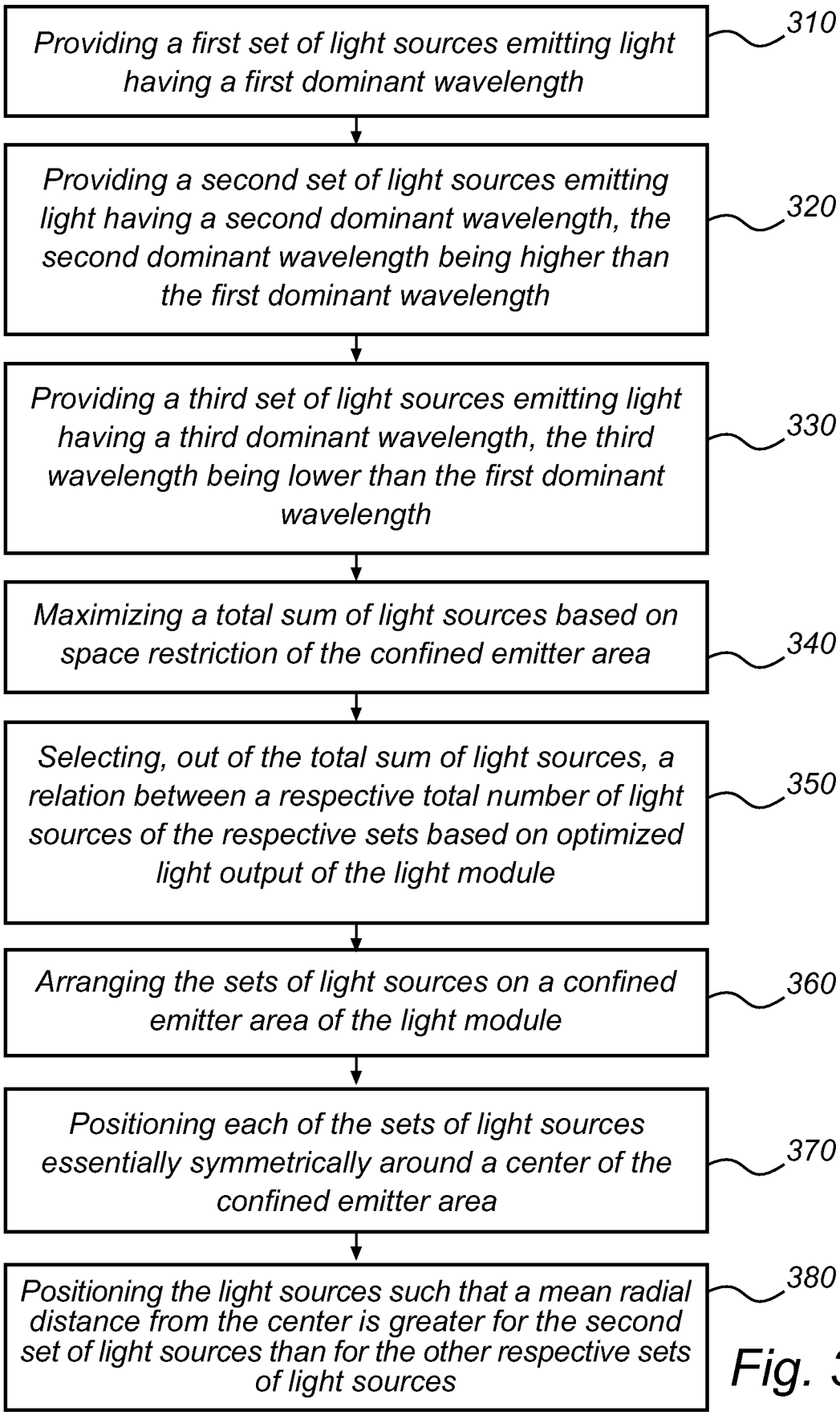
Providing a first set of light sources emitting light having a first dominant wavelength
310
Providing a second set of light sources emitting light having a second dominant wavelength, the second dominant wavelength being higher than the first dominant wavelength
320
Providing a third set of light sources emitting light having a third dominant wavelength, the third wavelength being lower than the first dominant wavelength
330
Maximizing a total sum of light sources based on space restriction of the confined emitter area
340
Selecting, out of the total sum of light sources, a relation between a respective total number of light sources of the respective sets based on optimized light output of the light module
350
Arranging the sets of light sources on a confined emitter area of the light module
360
Positioning each of the sets of light sources essentially symmetrically around a center of the confined emitter area
370
Positioning the light sources such that a mean radial distance from the center is greater for the second set of light sources than for the other respective sets of light sources
380

Fig. 3

INTERNATIONAL SEARCH REPORT

International application No
PCT/IB2012/050490

A. CLASSIFICATION OF SUBJECT MATTER
INV. F21S8/02
ADD.

According to International Patent Classification (IPC) or to both national classification and IPC

B. FIELDS SEARCHED

Minimum documentation searched (classification system followed by classification symbols)
F21K F21S

Documentation searched other than minimum documentation to the extent that such documents are included in the fields searched

Electronic data base consulted during the international search (name of data base and, where practicable, search terms used)
EPO-Internal

C. DOCUMENTS CONSIDERED TO BE RELEVANT

Category*	Citation of document, with indication, where appropriate, of the relevant passages	Relevant to claim No.
X	US 2010/254129 A1 (LE TOQUIN RONAN [US] ET AL) 7 October 2010 (2010-10-07) paragraphs [0044], [0065] figures 5,9	1-9
A	EP 2 233 819 A1 (PANASONIC ELEC WORKS CO LTD [JP]) 29 September 2010 (2010-09-29) paragraph [0023] figure 2	1-9
A	WO 2011/004019 A1 (FRICKE CHRISTIAN [DE]; TREBES FRANK [DE]) 13 January 2011 (2011-01-13) page 17, line 1 - page 18, line 2 figure 8	1-9

☐ Further documents are listed in the continuation of Box C.

☒ See patent family annex.

* Special categories of cited documents :

"A" document defining the general state of the art which is not considered to be of particular relevance

"E" earlier application or patent but published on or after the international filing date

"L" document which may throw doubts on priority claim(s) or which is cited to establish the publication date of another citation or other special reason (as specified)

"O" document referring to an oral disclosure, use, exhibition or other means

"P" document published prior to the international filing date but later than the priority date claimed

"T" later document published after the international filing date or priority date and not in conflict with the application but cited to understand the principle or theory underlying the invention

"X" document of particular relevance; the claimed invention cannot be considered novel or cannot be considered to involve an inventive step when the document is taken alone

"Y" document of particular relevance; the claimed invention cannot be considered to involve an inventive step when the document is combined with one or more other such documents, such combination being obvious to a person skilled in the art

"&" document member of the same patent family

Date of the actual completion of the international search	Date of mailing of the international search report
20 June 2012	27/06/2012

Name and mailing address of the ISA/	Authorized officer
European Patent Office, P.B. 5818 Patentlaan 2 NL - 2280 HV Rijswijk Tel. (+31-70) 340-2040, Fax: (+31-70) 340-3016	Amerongen, Wim

1

INTERNATIONAL SEARCH REPORT

Information on patent family members

International application No
PCT/IB2012/050490

Patent document cited in search report	Publication date	Patent family member(s)	Publication date
US 2010254129 A1	07-10-2010	US 2010254129 A1	07-10-2010
		WO 2011084131 A1	14-07-2011
EP 2233819 A1	29-09-2010	CN 101846281 A	29-09-2010
		EP 2233819 A1	29-09-2010
		JP 2010231938 A	14-10-2010
		US 2010244061 A1	30-09-2010
WO 2011004019 A1	13-01-2011	GB 2471836 A	19-01-2011
		WO 2011004019 A1	13-01-2011