2 Sheets—Sheet 1.

J. A. PARSONS.

ROTARY-PUMPS.

No. 193,891. Patented Aug. 7, 1877.

Fig. 1.

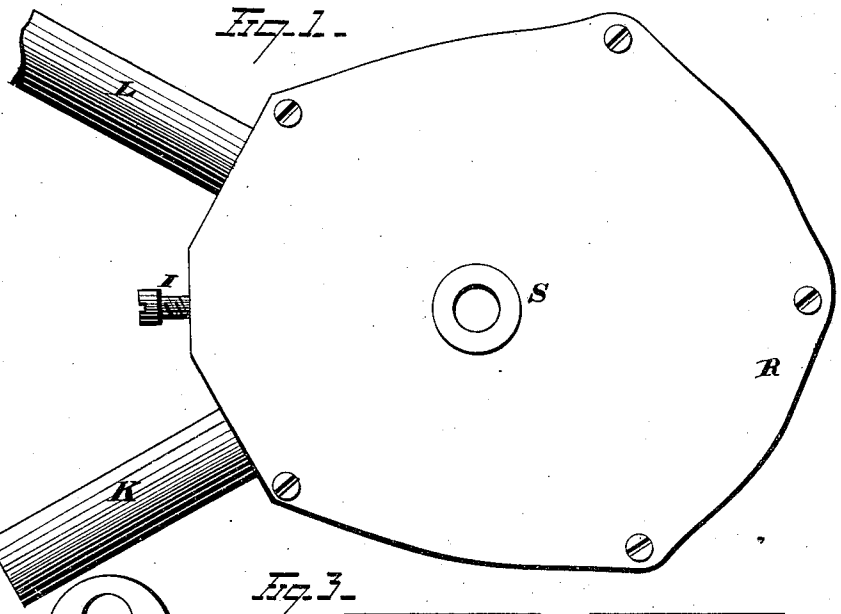

Fig. 3.

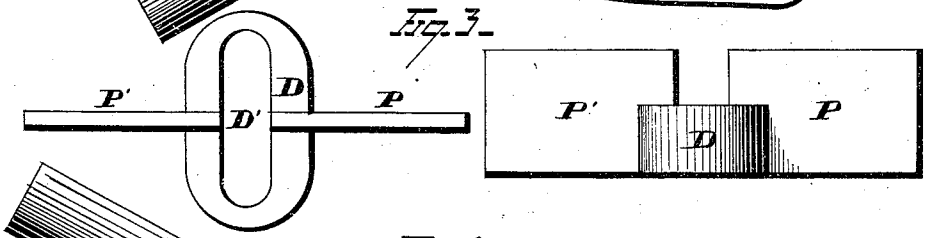

Fig. 2.

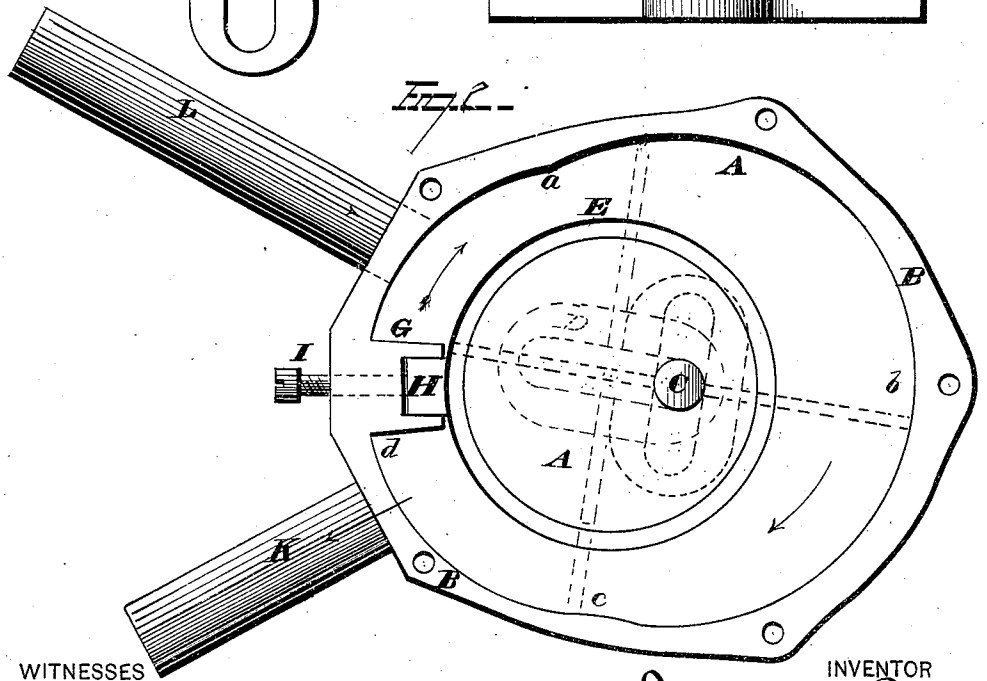

WITNESSES

Ed. L. Nottingham

A. W. Bright.

INVENTOR

Joseph A. Parsons

By Leggett & Leggett

ATTORNEYS

N. PETERS, PHOTO-LITHOGRAPHER, WASHINGTON, D. C.

2 Sheets—Sheet 2.

J. A. PARSONS.

ROTARY-PUMPS.

No. 193,891. Patented Aug. 7, 1877.

Fig. 4.

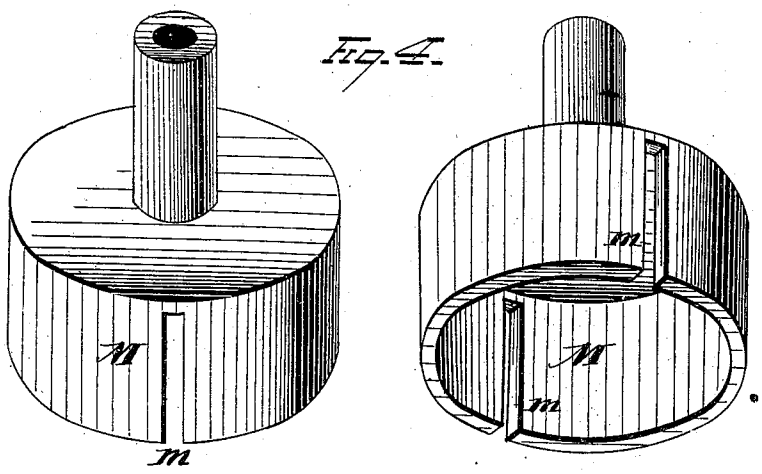

Fig. 5.

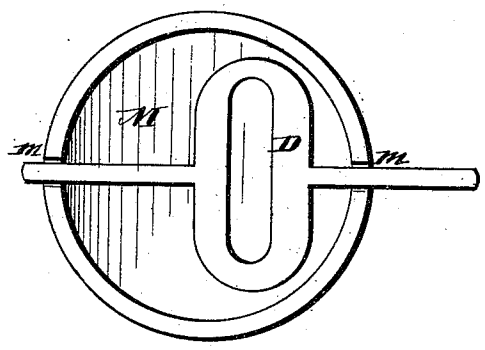

WITNESSES

Ed. L. Nottingham

A. W. Bright.

INVENTOR

Joseph A. Parsons

By Leggett and Leggett.

ATTORNEYS

N. PETERS, PHOTO-LITHOGRAPHER, WASHINGTON, D. C.

UNITED STATES PATENT OFFICE.

JOSEPH A. PARSONS, OF CLEVELAND, OHIO.

IMPROVEMENT IN ROTARY PUMPS.

Specification forming part of Letters Patent No. **193,891**, dated August 7, 1877; application filed February 28, 1877.

To all whom it may concern:

Be it known that I, JOSEPH A. PARSONS, of Cleveland, in the county of Cuyahoga and State of Ohio, have invented certain new and useful Improvements in Rotary Pumps; and I do hereby declare the following to be a full, clear, and exact description of the invention, such as will enable others skilled in the art to which it pertains to make and use it, reference being had to the accompanying drawings, which form part of this specification.

My invention relates to rotary pumps, and is equally applicable to water-meters, rotary engines, or water-wheels.

It consists in the several parts and combinations, as hereinafter specified and claimed.

In the drawings, Figure 1 represents an exterior view of the apparatus. Fig. 2 is a plan view of the bottom of the interior of the casing. Fig. 3 represents a top and side view of the sliding pistons. Fig. 4 shows two different perspective views of the revolving drum to which the shaft, by which power is transmitted, is secured. Fig. 5 represents a view of the bottom of the drum with sliding piston in position.

The device is constructed of any suitable metal, and may be of any desired external shape.

In Fig. 2 is shown a view of the interior, and in dotted lines is shown the position of the sliding pistons on the center-pin, when the drum is in a certain position.

A represents the bottom, and B the sides of the case. C is a pin or projection, which fits into the slot D′ of the sliding pistons P P′. Said pin C is not located exactly in the center of the case, as will hereinafter appear. E is a groove formed in the bottom, in which the drum fits, and is just deep enough to prevent it from being accidentally displaced. G is a grooved projection, cast or otherwise secured to the case, in which snugly fits a block, H, but which can be moved inward by means of the screw or screws I, for the purpose of securing a closer or looser fit, as may be desired, between it and the outside of the drum. K and L are two pipes, which communicate with the interior of the case, one being the inlet and the other the outlet pipe; but as the device can be turned in either direction, either pipe may be used as the inlet. Said projection G is placed between the openings of the two pipes into the casing. The pistons consist of two flat pieces, P P′, secured to the slot-provided central piece D, and are preferably cast in one piece with the same. This piston (or pistons) is guided in its movements by the pin C_b, which fits in the slot thereof. When placed in position on said pin the drum M is fitted over the same, the pistons fitting in the slots *m* of the drum, the latter fitting in the groove E of the bottom. When the top R is secured to the case, the drum is prevented from jumping out of the groove, as the top fits closely over the top of the drum. To said drum is secured the shaft S, which passes through said cover R. By means of the shaft power is transmitted to any desired place. The pin C is provided with an anti-friction roller, so as to reduce the amount of friction between the sides of the slot and the pin to a minimum. Between the ends of the screw or screws I and the block H is inserted a rubber or other packing, so as to allow the block H to yield when necessary.

It will be noticed that the interior sides of the casing consist in form of two separate curves, one extending from *a* to *c* by *b*, and the other from *a* to *c* by *d*. The first-named curve, *a b c*, is not a true circle, but an ellipse, which is necessary, for the reason that the center of the drum, through which the pistons pass, is eccentric to the center of the pin C.

The operation of the device is as follows: In the case of a rotary pump power is applied to the shaft S, and as the water enters by, say, inlet L, it is sucked in the direction of the arrow. The relative arrangement of the several parts is such that the moment one of the sliding pistons passes beyond the projection G (the drum revolving in the direction of the arrows) it commences to slide outward, and, when the point *a* is reached, said piston is in contact with the sides of the case, and continues so until the point *c* is reached, when it gradually recedes until the projection G is opposite the piston, when said piston has receded within the periphery of the drum. The water that has, therefore, been sucked into the casing by the action of the

revolving drum and sliding pistons, is carried around thereby in the direction of the arrows, and is forced out by the action of the pistons and passes out at the exit-pipe K.

It is obvious that in one revolution of the drum the relative position of the pin C to the sliding pistons is continually changing, the slotted part D having the pin C now at one end of the slot and then at the other, while it revolves around the same.

When the device is used as a water-meter, as a rotary engine, or as a water-wheel, power is transmitted by the shaft S and not to it, as in the case when used as a rotary pump.

By combining two of these devices so that the water which passes out of one will pass through the other, a rotary pump and meter may be combined, the water passing first through the rotary pump, and then through the meter, the first being operated by power applied to the shaft, the second by the action of the water on the pistons, which transmit their motion to the shaft to which the registering device may be attached.

What I claim as my invention, and desire to secure by Letters Patent, is—

1. The combination, with the casing, having a circular groove located eccentrically in one head of the same, of a slotted drum having a shaft rigidly secured thereto, and pistons connected by a yoke, within which is inserted a bearing-pin, substantially as and for the purpose set forth.

2. The combination, with the casing and adjustable abutment located between the induction and eduction ports of the same, of a slotted drum arranged eccentrically within the casing, and pistons connected to a yoke, which latter is supported by an independent bearing-pin, substantially as and for the purpose set forth.

In testimony whereof I have signed my name to this specification in the presence of two subscribing witnesses.

JOSEPH A. PARSONS.

Witnesses:

FRANCIS TOUMEY,

WM. BEHRENS.