US 20090217048A1

(19) **United States**

(12) **Patent Application Publication**

Smith

(10) **Pub. No.: US 2009/0217048 A1**

(43) **Pub. Date: Aug. 27, 2009**

(54) **WIRELESS DEVICE AUTHENTICATION BETWEEN DIFFERENT NETWORKS**

(75) Inventor: **Brian Norman Smith**, Burlington (CA)

Correspondence Address:
BORDEN LADNER GERVAIS LLP
Anne Kinsman
WORLD EXCHANGE PLAZA, 100 QUEEN STREET SUITE 1100
OTTAWA, ON K1P 1J9 (CA)

(73) Assignee: **BCE INC.**, Montreal, QC (CA)

(21) Appl. No.: **11/571,206**

(22) PCT Filed: **Dec. 23, 2005**

(86) PCT No.: **PCT/CA2005/001971**

§ 371 (c)(1),
(2), (4) Date: **May 8, 2009**

Publication Classification

(51) **Int. Cl.**
H04L 9/32 (2006.01)
H04L 9/00 (2006.01)

(52) **U.S. Cl.** **713/176**; 380/270

(57) **ABSTRACT**

A method and system for roaming between heterogeneous networks. The method involves authenticating a mobile communication device on a first network, providing the device with a single-use token that can be used to sign-on to a second network without requiring conventional re-authentication over the second network. The method and system allows a token or set of tokens to be sent to a mobile device over a secure and trusted channel. The token can then be sent over another network, operating over a different protocol to an authentication system where its contents are verified and authorization to access the new network is generated such that the token does not need to be processed by the new network. Hence the mobile device does not need to re-authenticate to the new network.

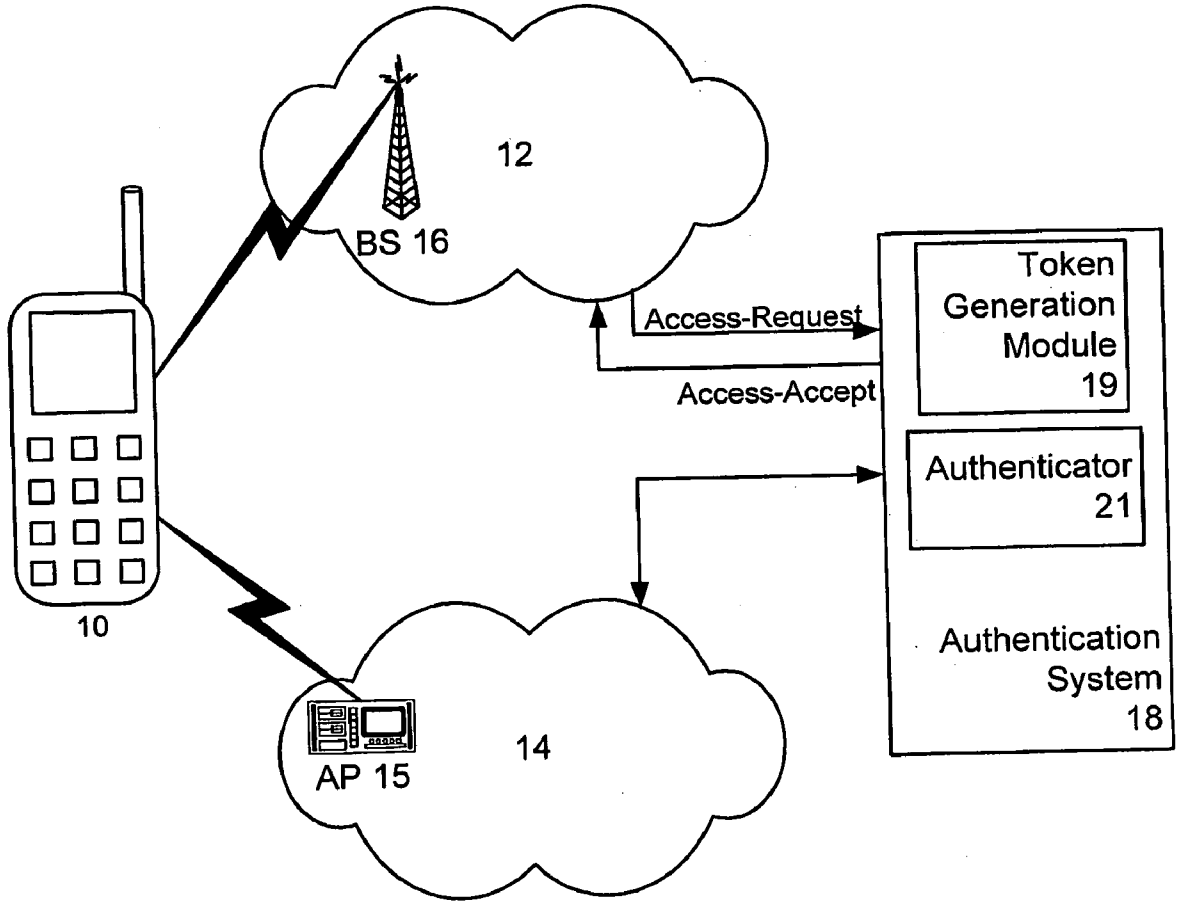

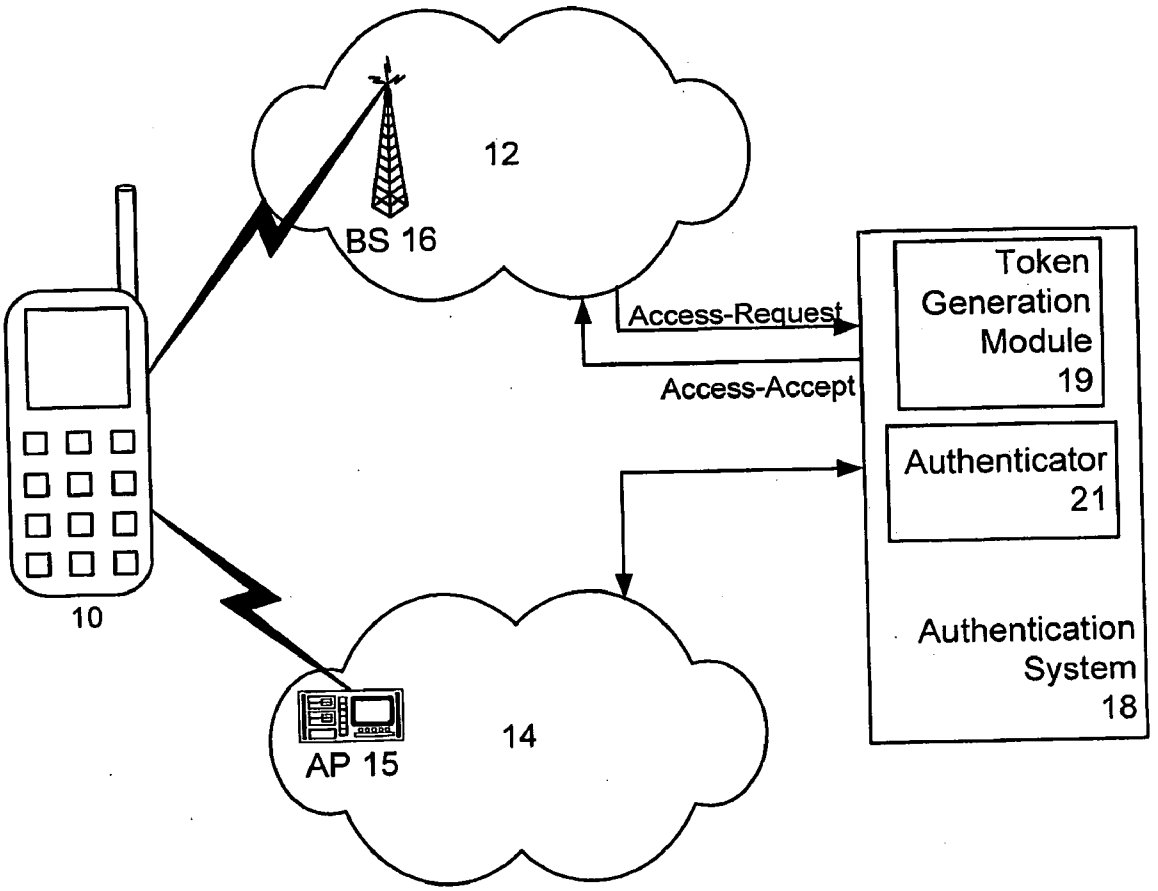
12
BS 16
Access-Request
Access-Accept
Token Generation Module 19
Authenticator 21
Authentication System 18
10
14
AP 15

Figure 1

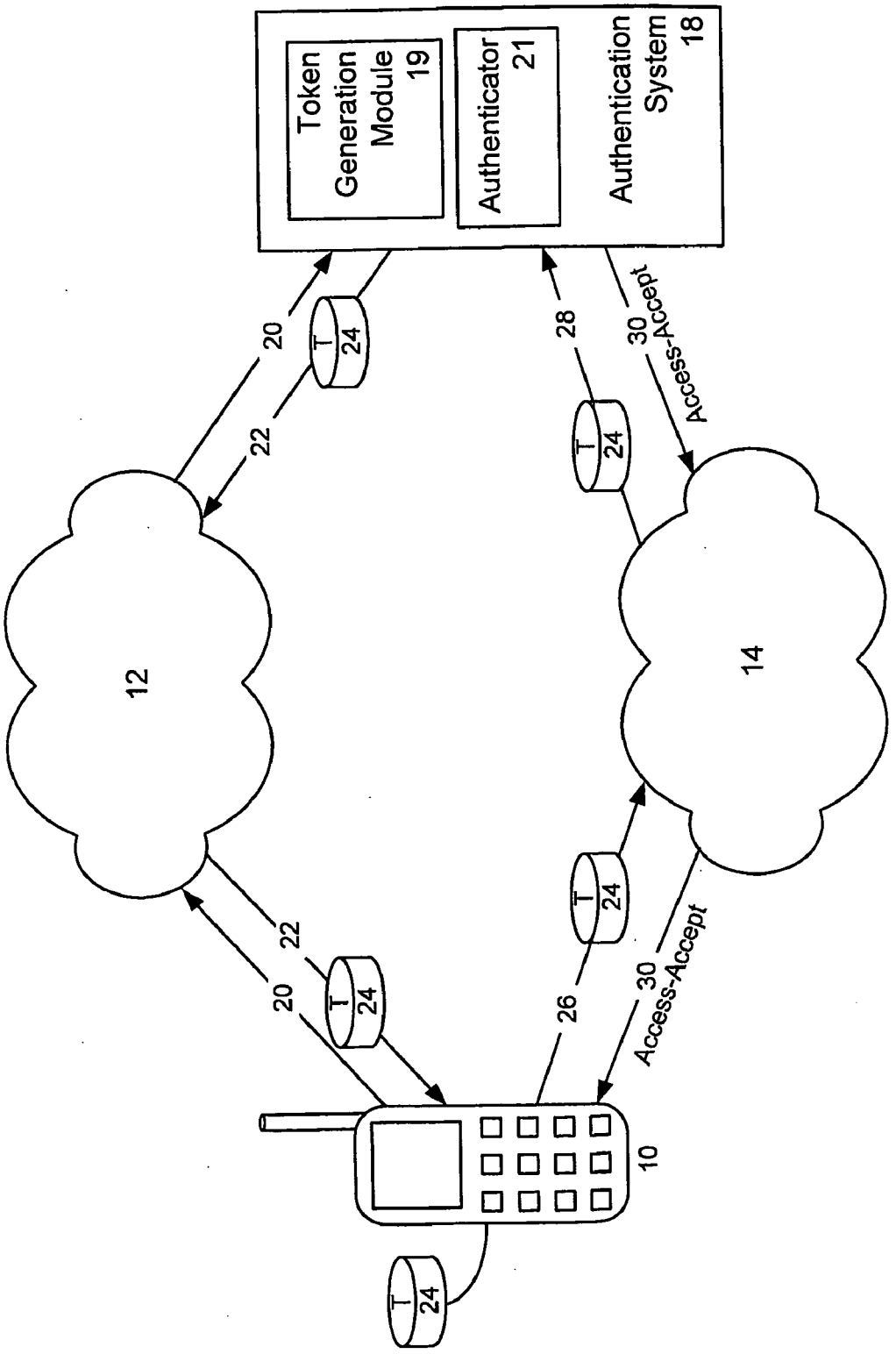
Token Generation Module 19
Authenticator 21
Authentication System 18
20
22
28
30 Access-Accept
12
14
T
24
26
10

Figure 2

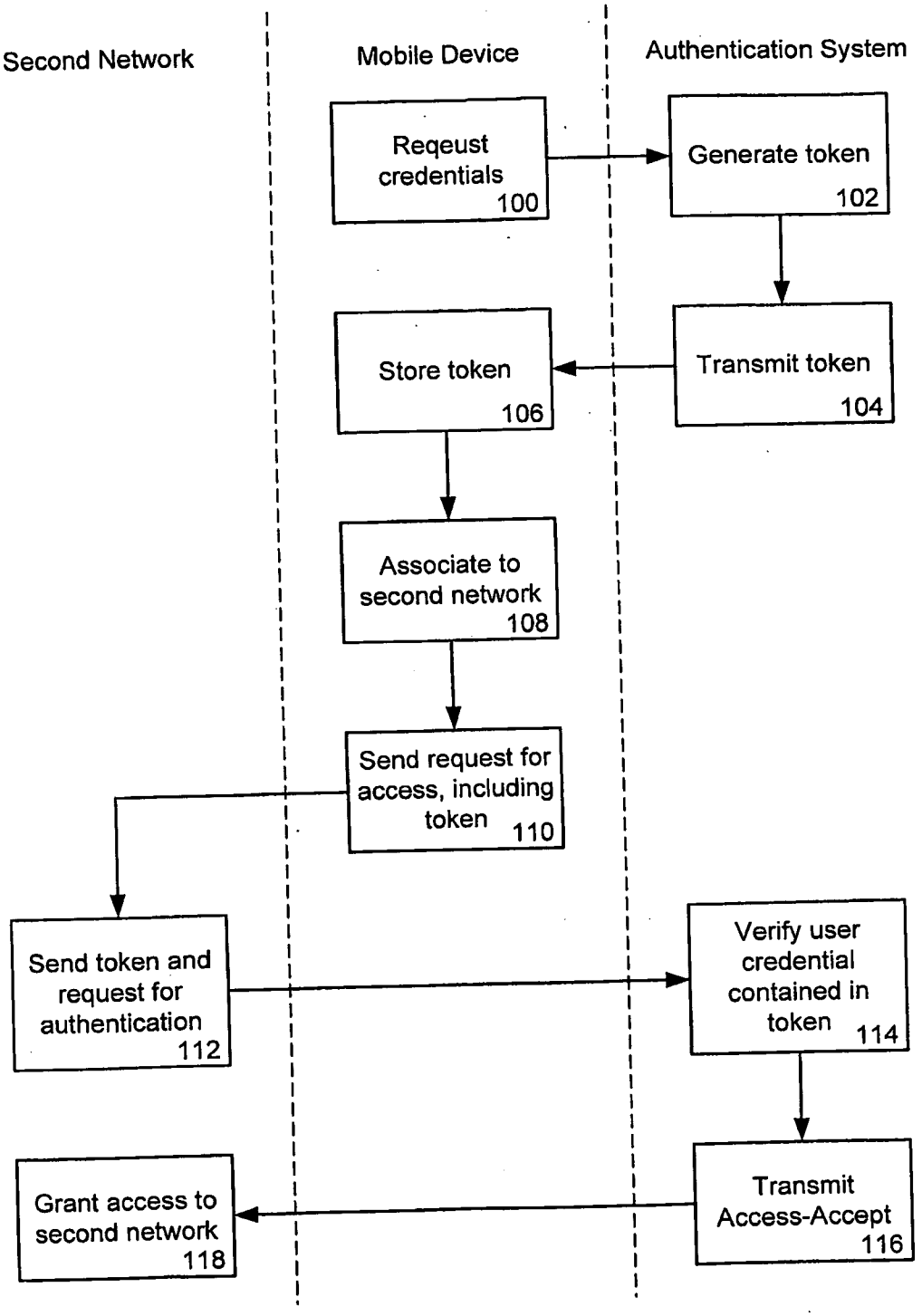
Second Network
Mobile Device
Authentication System
Reqeust credentials 100
Generate token 102
Store token 106
Transmit token 104
Associate to second network 108
Send request for access, including token 110
Send token and request for authentication 112
Verify user credential contained in token 114
Grant access to second network 118
Transmit Access-Accept 116

Figure 3

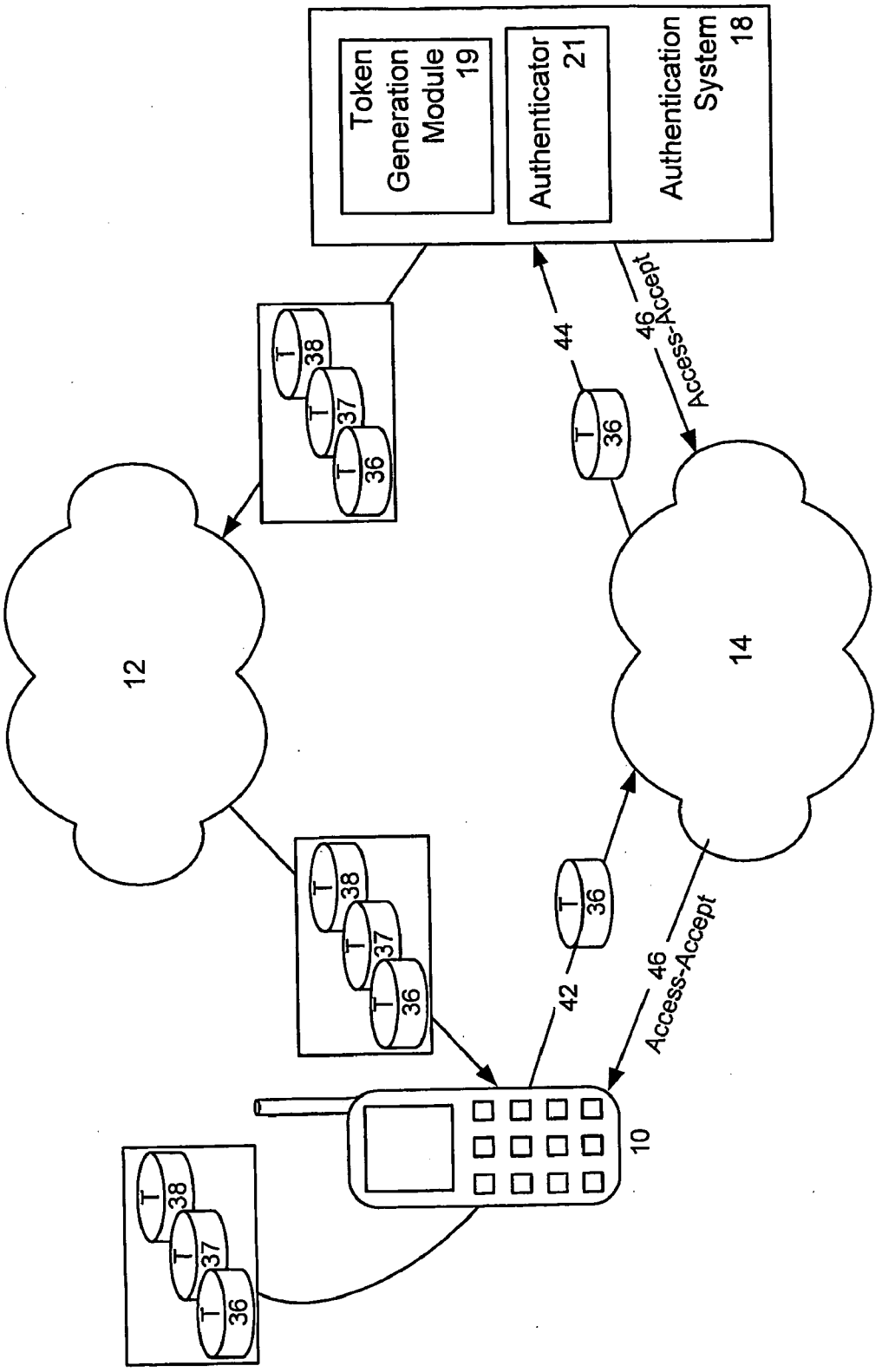
Authentication System 18
Token Generation Module 19
Authenticator 21
44
46 Access-Accept
12
14
10
42
46 Access-Accept
T
36
37
38

Figure 4

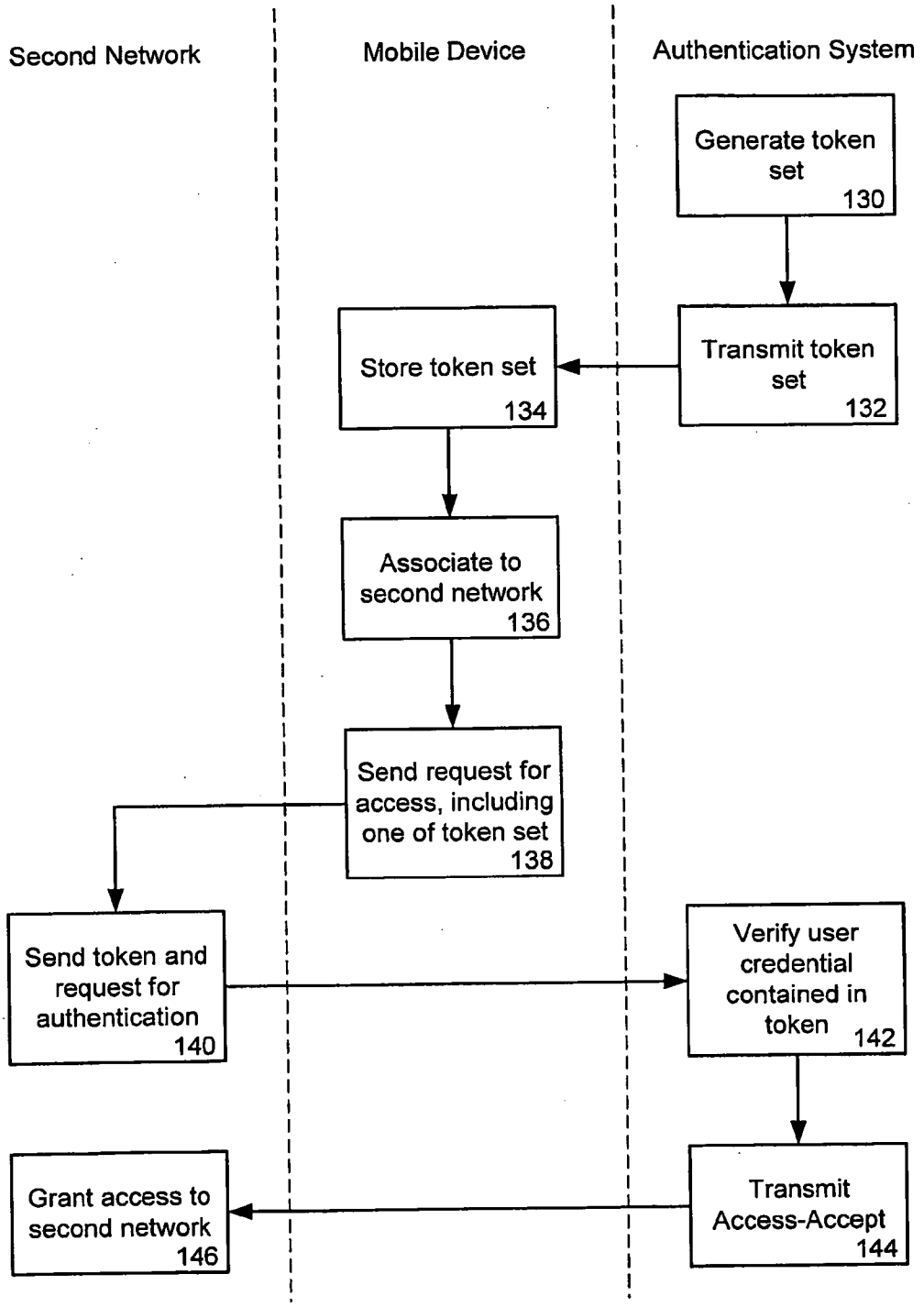
Second Network
Mobile Device
Authentication System
Generate token set 130
Transmit token set 132
Store token set 134
Associate to second network 136
Send request for access, including one of token set 138
Send token and request for authentication 140
Verify user credential contained in token 142
Transmit Access-Accept 144
Grant access to second network 146

Figure 5

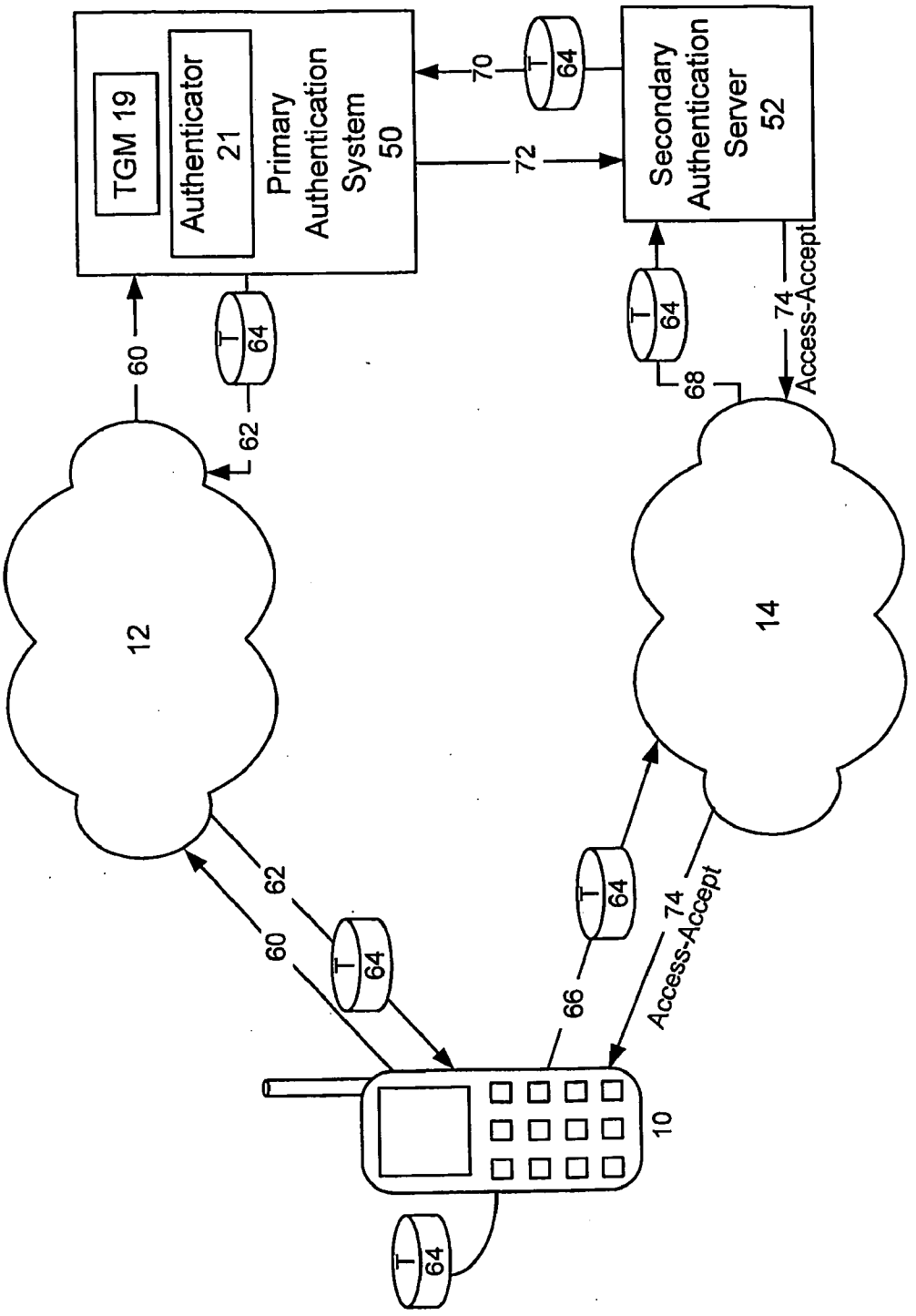
TGM 19
Authenticator 21
Primary Authentication System 50
Secondary Authentication Server 52
70
72
60
62
64
68
74
Access-Accept
12
14
66
10

Figure 6

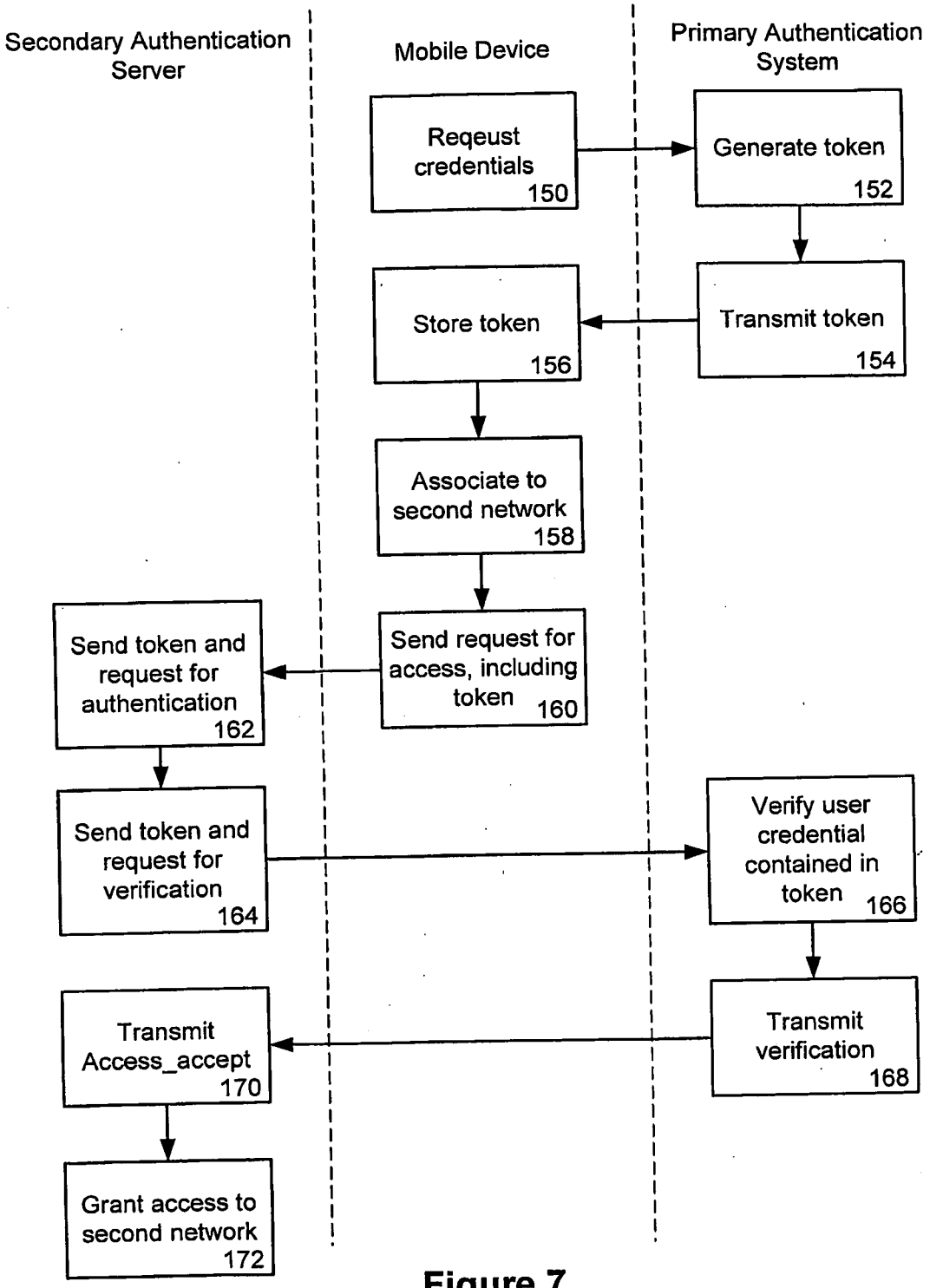
Secondary Authentication Server
Mobile Device
Primary Authentication System
Reqeust credentials 150
Generate token 152
Transmit token 154
Store token 156
Associate to second network 158
Send request for access, including token 160
Send token and request for authentication 162
Send token and request for verification 164
Verify user credential contained in token 166
Transmit verification 168
Transmit Access_accept 170
Grant access to second network 172

Figure 7

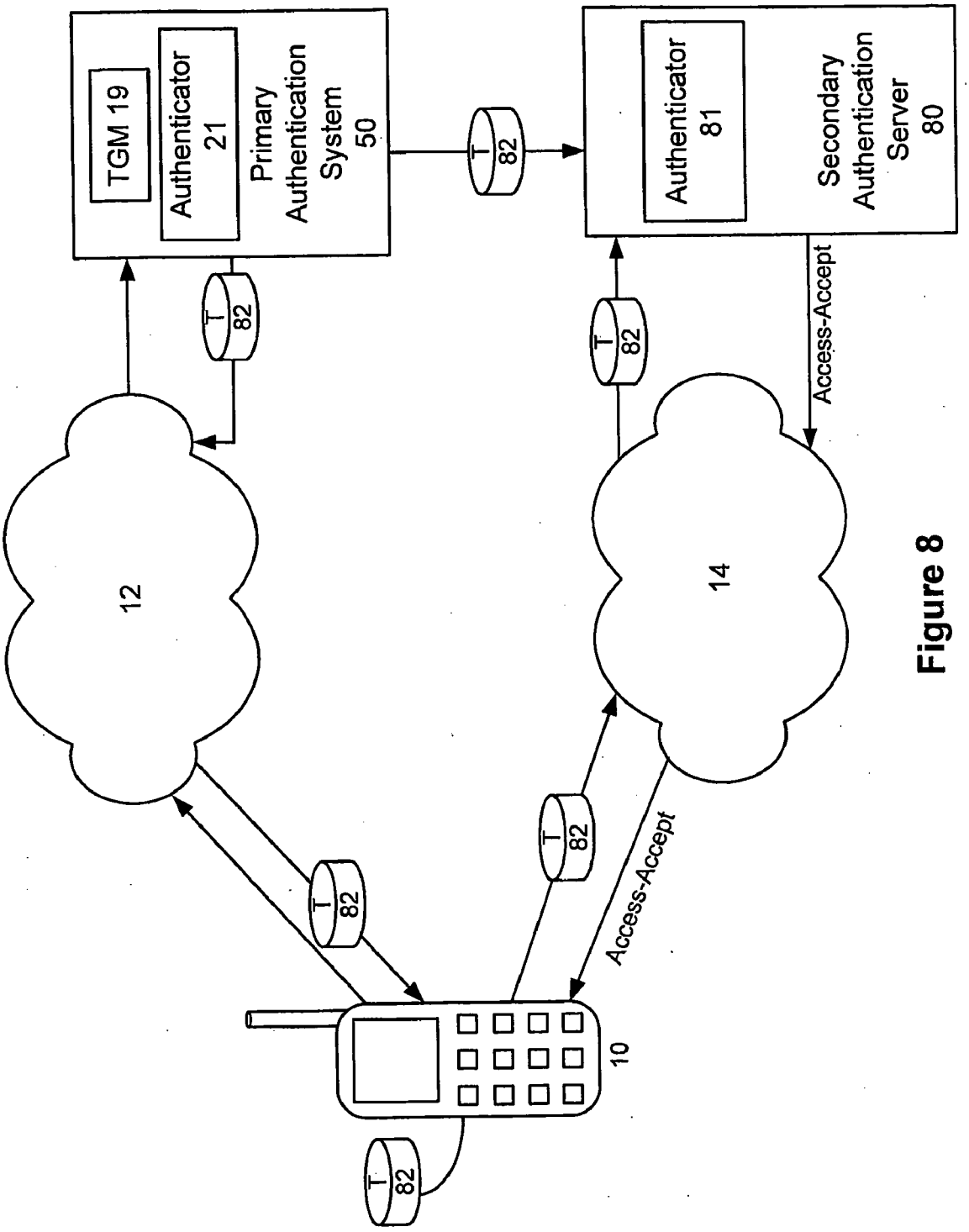
TGM 19
Authenticator 21
Primary Authentication System 50
Authenticator 81
Secondary Authentication Server 80
T 82
Access-Accept
Access-Accept
12
14
10

Figure 8

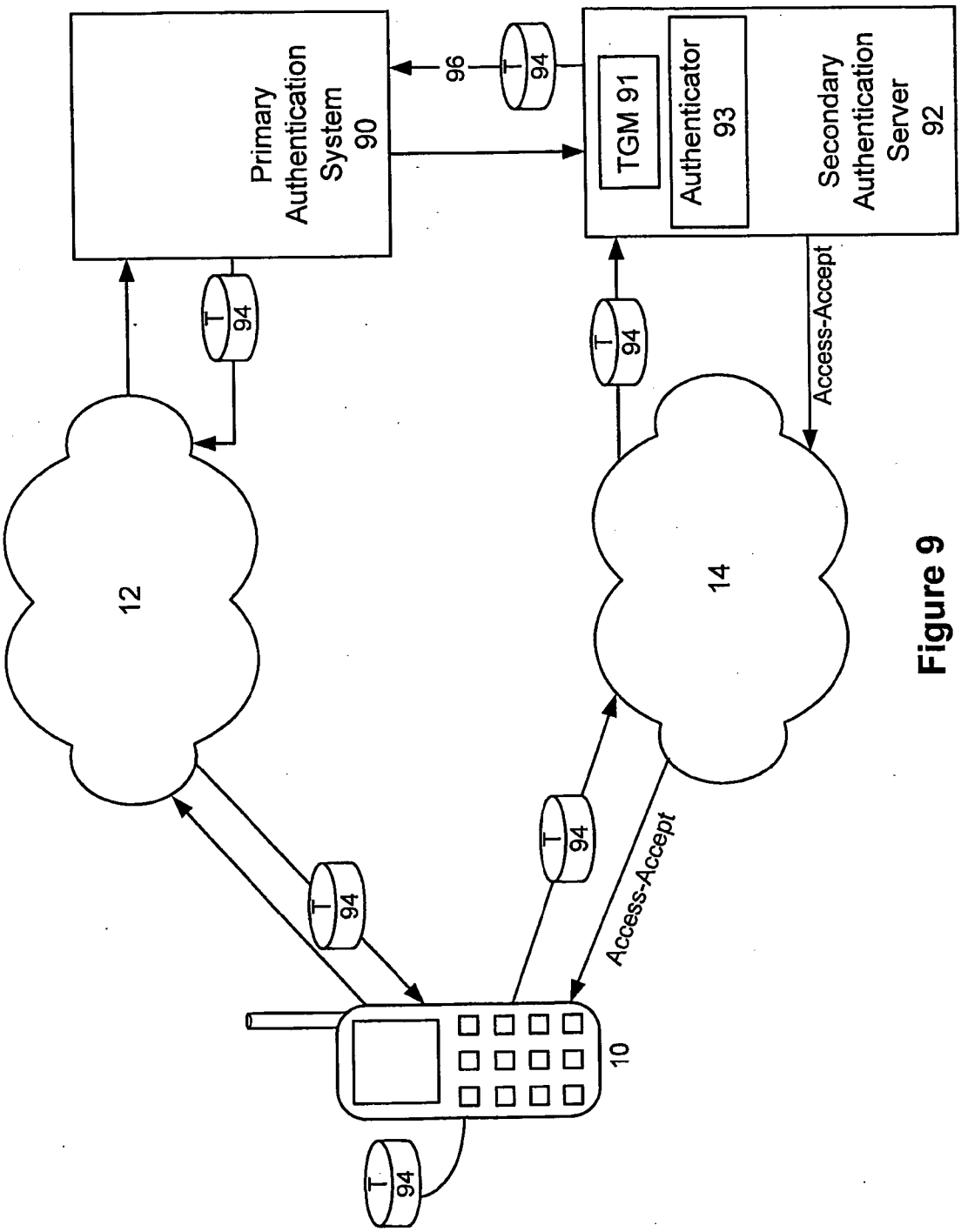
Primary Authentication System 90
96
94
TGM 91
Authenticator 93
Secondary Authentication Server 92
Access-Accept
12
14
10
Access-Accept

Figure 9

WIRELESS DEVICE AUTHENTICATION BETWEEN DIFFERENT NETWORKS

FIELD OF THE INVENTION

[0001] The present invention relates generally to wireless communication systems. More particularly, the present invention relates to authentication of wireless devices for access to different wireless networks.

BACKGROUND OF THE INVENTION

[0002] With the widespread adoption of wireless communication devices, and the proliferation of Wi-Fi hotspots, or IEEE 802.11 WLANs (Wireless Local Area Networks), there is a growing demand for hybrid mobile communication devices that are capable of operating across networks implementing varied wireless technologies. Mobile communication devices, such as cellular telephones, personal digital assistants, and wireless-enabled laptop computers, are now becoming available with interfaces for multiple wireless networks, such as CDMA (Code Division Multiple Access) 1×RTT (1× Radio Transmission Technology), CDMA EVDO (Evolution-Data Optimized) networks, and Wi-Fi networks.

[0003] Generally, a mobile device user must be authenticated to a network prior to gaining access to the network services. Challenge-Handshake Authentication Protocol (CHAP) is a common authentication protocol used to effect such authentication. CHAP uses a three-way handshake to verify the identity of the client or user upon initial link establishment. After the link is established, the authentication server sends a challenge message to the mobile device. Using a shared secret, such as a password, the user device responds with a value calculated using a one-way hash function, such as MD5 (Message-Digest 5). The authentication server checks the response against its own calculation of the expected hash value, using the same shared secret. If the values match, the authentication is acknowledged; otherwise the connection is terminated.

[0004] When moving between networks, a handoff must occur, requiring an authentication to the new network. In current hybrid architectures, full authentication is repeated, often requiring the user to re-enter username and password information. Even in systems where the login information is passed directly to the new network, the challenge-based authentication can result in slow handoffs, which may be undesirable from a performance perspective. For example, in voice communications, latencies of greater than about 150 ms are considered unacceptable and may be perceptible to the user.

[0005] In addition to the speed of the handoff, the authentication to the second network can pose security risks. It is well recognized that some wireless networks are more secure and trusted than other wireless networks. For example, a CDMA 1×RTT network is generally considered to be more secure than an IEEE 802.11-based Wi-Fi network, due to the broader spectrum availability, and established security practices and policies. In less-secure environments, the known vulnerabilities in conventional authentication protocols, such as CHAP, may be exploited by rogue parties to intercept private information.

[0006] Certificate-based techniques, using IPSec VPNs (Internet Protocol Security Virtual Private Networks), to support transparent and more secure roaming have been proposed. A disadvantage of such techniques is that the user must be issued the necessary certificates, such as public and private key certificates, over a separately established secure channel, such as an https (HyperText Transfer Protocol Secure sockets) channel, prior to roaming. The use of temporary authentication identities, such as a Temporary Mobile Subscriber Identity (TMSI), have also been proposed to facilitate roaming to pre-authorized Wi-Fi access points within a cell. While such techniques would permit relatively seamless roaming, they require that the TMSI be provided in advance to each authorized access point.

[0007] It is, therefore, desirable to provide a method and system for quickly and securely authenticating to a new network, such as when roaming with a mobile communication device.

SUMMARY OF THE INVENTION

[0008] In a first aspect, the present invention provides a method of performing authentication of a wireless mobile communication device on a network. The method comprises providing a token to the mobile communication device over a first network; receiving the token from the mobile communication device over a second network; and authenticating the mobile communication device for access to the second network by verifying the token.

[0009] In a second aspect, the present invention provides an authentication system. The authentication system comprises a token generation module to provide a token to a mobile communication device over a first network; and an authenticator to receive the token from the mobile communication device over a second network, to verify a token contents, and to grant the mobile communication device access to the second network based on the verification of the token contents.

[0010] In a further aspect, the present invention provides a method for authenticating to a heterogeneous network, comprising: receiving a token over a first network to which a mobile communication device is authenticated; sending the token to an authenticator over a second heterogeneous network; and receiving authorization to access the second network from the authenticator based on a verification of contents of the token.

[0011] The present invention also provides a mobile communication device, comprising: means to receive a token over a first network, the token containing credentials for authentication to a second network; and means to forward the token over the second network for authentication.

[0012] In yet another aspect, the present invention provides a communications network having authentication functions; comprising: an authentication system having a token generation module to provide a token to a mobile communication device over the communications network; and an authenticator to receive the token from the mobile communication device over a separate network, to verify a token contents, and to grant the mobile communication device access to the separate network based on the verification of the token contents.

[0013] In yet another aspect, the present invention provides a communication system, comprising: a mobile communication device; a first network to which the mobile communication is authenticated; and an authentication system having a token generation module to provide a token to a mobile communication device over the first network; and an authenticator to receive the token from the mobile communication device over a separate network, to verify a token contents, and to grant the mobile communication device access to the separate network based on the verification of the token contents.

[0014] Other aspects and features of the present invention will become apparent to those ordinarily skilled in the art upon review of the following description of specific embodiments of the invention in conjunction with the accompanying figures.

BRIEF DESCRIPTION OF THE DRAWINGS

[0015] Embodiments of the present invention will now be described, by way of example only, with reference to the attached Figures, wherein:

[0016] FIG. **1** is a diagram of a heterogeneous wireless communication environment according to some embodiments of the present invention;

[0017] FIG. **2** shows a system for effecting handoff between wireless networks, according to a first embodiment;

[0018] FIG. **3** is a flow chart of a method for authentication and handoff according to the first embodiment;

[0019] FIG. **4** shows a system for effecting handoff between wireless networks, according to a second embodiment;

[0020] FIG. **5** is a flow chart of a method for authentication according to the second embodiment;

[0021] FIG. **6** shows a system including a primary authentication system and a secondary authentication server according to an embodiment of the present invention;

[0022] FIG. **7** is a flow chart of a method for authentication using the system of FIG. **6**;

[0023] FIG. **8** shows a system in which a secondary authentication server includes an authenticator according to the present invention; and

[0024] FIG. **9** shows a system in which a secondary authentication server includes an authenticator and a token generation module according to the present invention.

DETAILED DESCRIPTION

[0025] Generally, the present invention provides a method and system for authenticating a mobile communication device on a first network, and providing the device with a token that can be used to sign on to a second network without requiring conventional re-authentication over the second network. In some embodiments, the token used to sign on to the second network can be a single use token.

[0026] FIG. **1** shows a heterogeneous wireless communication environment according to some embodiments of the present invention where a mobile communication device **10** initially authenticates over a first network **12**, for example, operating under a first wireless protocol, and roams to a second network **14**, for example, operating under a different wireless protocol. The first network **12** is generally a trusted and secure network, operating under such protocols as CDMA2000 1×RTT, W-CDMA (Wireless CDMA), EDGE, CDMA EVDO, or GSM (Global System for Mobile Communications). The second network **14** can be any network different from the first network **12**. For example, the second network **14** can be operating under a different protocol than the first, can offer different services, such as voice or data communications, or can be operated by a different service provider. For the purposes of the present description, the second network **14** is a less secure network than the first network. For example, the second network can be a broadband wireless network, such as a WLAN operating under a protocol such as IEEE 802.11, 802.15, 802.16, 802.20 and their variants, a cellular network, or any other network that is different than the first network **12**.

[0027] The environment depicted in FIG. **1** includes an access point to a broadband wireless network, such as a Wi-Fi access point **15** as the wireless access to the second network **14**, a base station **16** as the wireless access to the cellular network **12**, and an authentication system **18**, which can be included in, for example, an authentication, authorization and accounting (AAA) server. While the following description will illustrate the invention with reference to an AAA server and AAA protocols, any authentication system that includes authentication functions to issue tokens and authenticate a wireless device to a network is encompassed by the present invention. The authentication system need not include accounting features, nor does it need to provide any management functions other than authentication. In addition, the authentication system does not need to be provided in a single server. The authentication functions can be distributed across several servers or applications, and can be wholly or partially operated by third parties distinct from the network service provider. The access point **15** and base station **16** communicate with conventional network elements (not shown), such as switches and routers, to transmit data or voice communications over the first and second networks **12**, **14**, as appropriate. In a WLAN, access points, or transceivers, such as access point **15**, connect mobile devices within the WLAN and also can serve as the point of interconnection between the WLAN, the Internet and a wired network. Each access point can serve multiple mobile devices within a defined network area. As mobile devices move beyond the range of one access point, they are automatically handed over to the next one. A small WLAN may only require a single access point, and the number required increases as a function of the number of mobile devices and the physical size of the WLAN. Similarly, base station **16** is accessible within a defined area, and can be in communication with other radio towers, and with the Internet and conventional wired networks to provide data and telephony services.

[0028] Registration, or initialization, of the mobile device **10** to the first network **12** typically involves authentication, authorization and accounting. The AAA server, including authentication system **18**, is a server application that handles user requests for access to computer resources and provides AAA services. The authentication system **18** includes a token generation module **19** and an authenticator **21**. The AAA server interacts with network access and gateway servers, home and visitor location registers, and databases and directories containing user information, user profiles, billing rates, etc. Common standards by which devices or applications communicate with an AAA server include the Remote Authentication Dial-In User Service (RADIUS), and RADIUS2 or DIAMETER.

[0029] RADIUS is an AAA protocol for applications such as network access or IP mobility. It is intended to work in both local and roaming situations. When connecting to a network, the mobile device **10** creates an ACCESS-REQUEST message, typically including a username and password, and passes the ACCESS-REQUEST to a network access server device (not shown) over Point-to-Point Protocol (PPP), then to the authentication system **18**. The authentication system **18** receives the ACCESS-REQUEST message and verifies that the server possesses a shared secret for the user. If the authentication system **18** does not possess a shared secret for the user, the request is silently dropped; otherwise, authentication

system **18** then authenticates the mobile device **10** using an authentication protocol, such as Password Authentication Protocol (PAP), CHAP, Extensible Authentication Protocol (EAP) or EAPOW (EAP over wireless). If authentication is successful, the authentication system **18** generates an ACCESS-ACCEPT message and transmits it to the mobile device **10** and to the network **12**, allowing the device to access network services in accordance with the user's profile, and to initiate voice or data communications. The AAA server is notified when the session starts and stops, so that the user can be billed accordingly; or the usage data can be used for statistical purposes. In some embodiments of the present invention the AAA server also stores information, accessible to, or stored directly within, the authentication system **18**, regarding other networks, such as second network **14**, to which the mobile subscriber can connect.

[0030] When the mobile device **10** moves into an area served by the second network **14**, it needs to authenticate to the authenticator **21** over the new network in order to maintain the voice or data communication. FIGS. **2** and **3** illustrate a first embodiment of a system and method for providing authentication to the second network **14** through the first network **12**. The authentication to the second network **14** can be followed by a handoff to the second network **14**. FIG. **2**, and subsequent system figures, are simplified representations showing the data flow between the mobile device **10**, the first and second networks **12**, **14**, and the authentication system **18**. Network elements, such as access point **15** and base station **16**, are not shown. However, as will be understood by those of skill in the art, communications between the authentication system **18** and the mobile device **10** are physically transmitted between elements appropriate to the given network, as exemplified above.

[0031] Referring to FIGS. **2** and **3**, the method commences after the mobile device **10** is authenticated in a conventional manner, as described above, to the first network **12**, and desires to access the second network **14**. The decision to access the second network **14** can be based on many factors, including location, signal strength, availability, cost, a desire to access services not provided by the first network, etc., as will be understood by those of skill in the art. In one embodiment, the mobile device **10** sends (**100**) a request **20** to the authentication system **18**, requesting credentials for logging in to the second network **14**. The token generation module **19** of the authentication system **18** generates (**102**) a token **24**, that includes the credentials required to authenticate the mobile device **10** to the second network **14**, and sends (**104**) a response **22**, including the token **24**, back to the mobile device **10**, over the first network **12**. The token **24** is then stored (**106**) in the mobile device **10**. The mobile device **10** can request credentials for access to the second network **14** at the time it desires to access the network, or can request the credentials in advance, and store the token for future use. The second network **14** can be any network, and does not need to be the next network that the device **10** desires to access. In a further embodiment, the authentication system **18** can generate and transmit the token **24** to the mobile device **10** automatically at initialization once the device **10** is authenticated, or at any other time during the device's connection to the first network **12**, obviating the need for request **20**.

[0032] When the mobile device associates (**108**) with the second network **14**, it sends (**110**) a message **26**, including identification information and the token **24**, requesting access to the second network **14**. The second network **14** sends a message **28** to the authenticator **21** of the authentication system **18**, requesting (**112**) authentication of the mobile device **10**. Message **28** includes the token **24**, and will also typically include the mobile device identification information and information identifying the second network. The authentication system **18** verifies (**114**) the information contained in the token **24**, based on the content of message **28**, and a shared secret or other key known to the authentication system **18**. If the verification is successful, the mobile device **10** is authenticated, and the authentication system **18** sends (**116**) an ACCESS-ACCEPT message **30** back through network **14** to the mobile device **10**, thereby granting access (**118**) to the second network **14** and completing the authentication. If the token fails to generate an ACCESS-ACCEPT message, mobile device **10** can proceed to authenticate to the second network using conventional authentication methods such as CHAP, PAP, EAP or EAPOW.

[0033] Once access to the second network **14** has been granted, the user can be handed off to the second network **14** and terminate his connection to the first network **12**, or can remain logged into two or more networks to, for example, access different services, such as voice and data services. Connection to multiple networks is, for example, enabled under the IPv6 communication protocol.

[0034] The content of token **24** depends on the network to be accessed and the relevant protocols in operation on the first and second networks. Typically, each token will include a username, password and protocol identification. To provide adequate security and avoid third party interception, some, or all, of this information can be encrypted or hashed, using any appropriate encryption scheme based on public and/or private key infrastructures, or hash functions, such as MD5, and SHA (Secure Hash Algorithm), with a key known to the authentication system **18**. The token can also include, or be associated to, encryption keys necessary for establishing and ensuring a secure communication channel between the mobile device and the second network. The token can be a single use token, or can be used multiple times, or a predetermined number of times, by the mobile communication device to access the second network. To provide additional security, the token can also be set to expire at a predetermined time, such as to avoid its use by any party outside a given window, or based on time paid for on the first and/or second networks, as in a pay per use telephone. Token expiry can also be based on number of uses of the token, or the number of times the user has accessed the second network. In this case, the security key associated to the token can be systematically changed. The token **24** also includes, for example in its header, address information for the authentication system **18**, to permit the second network **14** to identify authentication system **18**. As will be noted, token **24** is not opened, decrypted or verified until it is received at the authentication system **18**, and is merely passed through mobile device **10** and second network **14**.

[0035] FIGS. **4** and **5** illustrate a second embodiment in which multiple tokens are provided to the mobile device **10**. The method again commences after the mobile device **10** is authenticated in a conventional manner to the first network **12**. A set of tokens **36**, **37**, **38** is generated (**130**) by the authentication system **18**, and transmitted (**132**) to the mobile device **10**, either at the request of the mobile device or automatically upon initialization. The number of tokens can be any number, but for the purposes of illustration a set of three tokens is shown. The tokens **36**, **37**, **38** can be, for example, for access to different networks, valid at different times (i.e.

have different expiry times), or otherwise differentiated. The information necessary to differentiate between the tokens can be included in their headers. The tokens **36**, **37**, **38** are then stored (**134**) in the mobile device **10** for use during the current communication session. Supplying a set of tokens avoids the need for multiple requests by the mobile device and multiple token generation steps by the AAA server.

[0036] When the mobile device associates (**136**) with the second network **14**, it sends (**138**) a message **42**, including identification information and one of the tokens **36**, **37**, **38**, such as token **36**, requesting access to the second network **14**. The choice of the appropriate token to send can be based on, for example, the identity of network **14**, the current time, the services available on the network, such as voice or data services, the amount of time paid for on the network, the number of times the network has been previously accessed by the mobile communications device **10**, or a predefined network access order. Alternately, the tokens **36**, **37**, **38** can be used in order. The second network **14** sends a message **44** to the authentication system **18**, requesting (**140**) authentication of the mobile device **10**. Message **44** includes the token **36**, and will also typically include the mobile device identification information and information identifying the second network. As before, the authentication system **18** verifies (**142**) the information contained in the token **36**, based on the content of message **44**, and a shared secret or other key known to the authentication system **18**. If the verification is successful, the mobile device **10** is authenticated, and the authentication system **18** sends (**144**) an ACCESS-ACCEPT message **46** to the mobile device **10** granting access (**146**) to the second network **14** and completing the authentication process.

[0037] If the mobile device enters into an area served by another recognized network, a subsequent token can be used to authenticate to that network, without going back to the authentication system **18** for a new token. Subsequent tokens can also be used if a token expires and the user wants to continue accessing second network **14**, or if the user wishes to re-authenticate to the first network **12**. In the later embodiment the user may wish to re-authenticate to the first network **12** to obtain further tokens for future use. Similarly, if a first token fails to generate an ACCESS-ACCEPT message, a second token can be tried. If all tokens fail, the mobile device can fall back to standard authentication through an authentication protocol such as CHAP.

[0038] FIGS. **6** and **7** illustrate a further embodiment in which a primary authentication system **50** services the first network **12**, while a secondary authentication server **52** provides authentication functions for the second network **14**. The method commences after the mobile device **10** is authenticated in a conventional manner to the first network **12**. The mobile device **10** sends (**150**) a request **60** to the primary authentication system **50**, requesting credentials for logging in to the second network **14**. The token generation module **19** of the primary authentication system **50** generates (**152**) a token **64**, that includes the credentials required to authenticate the mobile device **10** to the second network **14**, and sends (**154**) a response **62**, including the token **64**, back to the mobile device **10**, over the first network **12**. The token **64** is then stored (**156**) in the mobile device **10**. When the mobile device associates (**158**) with the second network **14**, it sends (**160**) a message **66**, including identification information and the token **64**, requesting access to the second network **14**.

[0039] The second network **14** sends a message **68** to the secondary authentication server **52**, requesting (**162**) authentication of the mobile device **10**. Message **68** includes the token **64**, and will also typically include the mobile device identification information. The secondary authentication server **52** contacts the primary authentication system **50**, and sends it (**164**) a message **70** containing the token **64** and a request for verification. The secondary authentication server **52** can have independent knowledge of the contact information for the authentication system **18**, or the contact information can be included in the token **64**, such as in its header. The authentication system **18** verifies (**166**) the information contained in the token **64**, based on a shared secret or other key known to the primary authentication system **50**. If the verification is successful, primary authentication system **50** returns (**168**) a successful verification message **72** to the secondary authentication server **52**. The secondary authentication server **52** then authorizes the mobile device **10** for access to the second network, and sends (**170**) an ACCESS-ACCEPT message **74**, to the mobile device **10**, granting access (**172**) to the second network **14** and completing the authentication process.

[0040] In further embodiments, shown in FIGS. **8** and **9**, the secondary authentication server can include an authenticator, or can include a fully enabled authentication system, as described above. In such cases, the authentication functions of the present invention can be distributed. In FIG. **8**, the secondary authentication server **80** includes at least an authenticator **81**. The mobile device **10** requests credentials, and receives a token **82**, from the primary authentication system **50**. The primary authentication system **82** also provides the token **82**, or the encryption key associated with the token, to the secondary authentication server **80**. The mobile device **10** then requests access to the secondary network **14** and provides the token **82**. The authenticator **81** of the secondary authentication server **80** then verifies the token, as described above, and authorizes the mobile device **10** for access to the second network **14**.

[0041] In the embodiment of FIG. **9**, the secondary authentication server **92** includes both a token generation module **91** and an authenticator **93** in accordance with the present invention. The mobile device **10** requests credentials from the primary authentication system **90**. The primary authentication system **90** then contacts the secondary authentication server **92**. The token generation module **91** generates a token **94**, and sends it to the primary authentication system **90** in a message **96**. The primary authentication system **90** transmits the token **94** to the mobile device **10**, where it is stored. When the mobile device associates to the second network **14**, it sends the token **94** to the secondary authentication server **92**, which verifies the token at its authenticator **93**, and grants the mobile device **10** access to the second network **14**.

[0042] The embodiments described above are not intended to, in any way, limit the scope of the present invention. The token generation module functions and the authenticator functions can be distributed between the primary and secondary authentication systems, or other server, in any manner consistent with generating tokens for passing over a first network and receiving the tokens for authentication over a second network. It is contemplated that the generation of tokens, and their authentication, can occur on any server, or servers, associated with the first and/or the second networks. The tokens can be single use, or can be used for multiple access. One or more tokens can be provided to the mobile device, on demand or at any other time. Multiple tokens can

be generated, for access to different networks, valid at different times, or otherwise differentiated.

[0043] The application software embodying the mobile device token handling functions and the AAA and network server functionality can be stored on any suitable computer-useable medium for execution by a microprocessor in the mobile communication device or server, such as CD-ROM, hard disk, read-only memory, random access memory, flash memory, Subscriber Identity Module (SIM) card. The application software can be written in any suitable programming language, such as C++.

[0044] As will be appreciated by those of skill in the art, the described methods and systems allow a token, or set of tokens, to be sent to a mobile device over a secure and trusted channel. A token can then be sent over another network, operating under a different protocol, to an authentication system, where its contents are verified and authorization to access the new network is generated. Except for transfer to the authentication system, the token does not need to be processed by the second network, and messaging back and forth between the new network and the AAA server or the mobile device is significantly reduced, in contrast to conventional authentication protocols, particularly challenge protocols, such as CHAP.

[0045] Effectively, the mobile device does not need to re-authenticate to the new network, saving significant time and complexity in signing on to the new network. Such savings are particularly advantageous for services, such as Voice over IP (VoIP), where lengthy authentication to the new service is clearly undesirable, and may adversely affect the quality of service and user's perception of the service. In addition, since the tokens provide the necessary information to transparently generate an ACCESS-ACCEPT message without requiring the user to re-authenticate to the new network, the user is not required to manage multiple usernames and passwords.

[0046] Since the token contents, including usernames and passwords, are encrypted, the present invention permits rapid authentication to a new network, and can permit rapid handoff between a more trusted and a less trusted network. The present invention also provides enhanced security by limiting the amount of vulnerable authentication messaging between the authentication system and any less trusted network. This means service providers can integrate inexpensive IEEE 802.11 access points into their systems, rather than investing in costly cellular infrastructure, without unduly compromising the security of information sent over the less secure link.

[0047] The above-described embodiments of the present invention are intended to be examples only. Alterations, modifications and variations may be effected to the particular embodiments by those of skill in the art without departing from the scope of the invention, which is defined solely by the claims appended hereto.

1. A method of performing authentication of a wireless mobile communication device on a network, comprising:
- providing a token to the mobile communication device over a first network;
- receiving the token from the mobile communication device over a second network; and
- authenticating the mobile communication device for access to the second network by verifying the token.

2. The method of claim **1**, wherein providing the token to the mobile communication device comprises providing a username and password for access to the second network.

3. The method of claim **1**, further including providing encryption keys for establishing a secure channel between the mobile communication device and the second network.

4. The method of claim **3**, wherein providing the encryption keys comprises providing the encryption keys with the token.

5. The method of claim **1**, wherein providing the token to the mobile communication device comprises generating the token at the request of the mobile communication device.

6. The method of claim **1**, wherein the token comprises a header and a token content and wherein providing the token to the mobile communication device further comprises encrypting the token contents.

7. The method of claim **6**, wherein encrypting the token contents comprises employing a PKI method.

8. The method of claim **6**, wherein authenticating the mobile communication device for access to the second network by verifying the token comprises decrypting the token contents.

9. The method of claim **6**, wherein encrypting the token contents comprises applying a hash function to the token contents.

10. The method of claim **9**, wherein the hash function is MD5 or SHA.

11. The method of claim **1**, wherein providing a token to the mobile communication device comprises providing a plurality of tokens to the mobile communication device.

12. The method of claim **11**, wherein providing the plurality of tokens to the mobile communication device comprises providing a plurality of tokens having different expiry times.

13. The method of claim **11**, wherein providing the plurality of tokens to the mobile communication device comprises providing a plurality of tokens, each of which provides authentication to a different second network.

14. The method of claim **1**, wherein authenticating the mobile communication device comprises transmitting an ACCESS-ACCEPT message to the second network and the mobile communication device.

15. The method of claim **1**, wherein providing the token to the mobile communication device comprises providing the token over a secure channel.

16. The method of claim **1**, wherein the first network operates under a CDMA 1×RTT, W-CDMA, CDMA EVDO, or GSM protocol.

17. The method of claim **1**, wherein the second network operates under an IEEE 802.11, IEEE 802.15, IEEE 802.16, or IEEE 802.20 protocol.

18. The method of claim **1**, further comprising having the mobile communication device remain authenticated to both the first and second network.

19. The method of claim **18**, wherein having the mobile communication device remain authenticated to both the first and second networks is enabled by a communication according to the IPv6 protocol.

20. The method of claim **1**, wherein authenticating the mobile communication device for access to the second network further comprises authenticating under an authentication protocol, if verification of the token is unsuccessful.

21. The method of claim **20**, wherein authenticating under an authentication protocol comprises authenticating under CHAP, PAP, EAP or EAPOW protocols.

22. An authentication system, comprising:
- a token generation module to provide a token to a mobile communication device over a first network;

an authenticator to receive the token from the mobile communication device over a second network, to verify a token contents, and to grant the mobile communication device access to the second network based on the verification of the token contents.

23. The system of claim **22**, wherein the token contents comprises a username and password for access to the second network.

24. The system of claim **22**, wherein the token expires after a predetermined expiry time.

25. The system of claim **22**, wherein the token generation module is further operable to receive a request from the mobile communication device.

26. The system of claim **22**, wherein the token generation module is further operable to encrypt the token contents.

27. The system of claim **26**, wherein to encrypt the token contents, the token generation module is operable to employ a PKI method.

28. The system of claim **26**, wherein the authenticator is further operable to decrypt the token.

29. The system of claim **26**, wherein the token generation module is further operable to apply a hash function to the token contents.

30. The system of claim **29**, wherein the hash function is MD5 or SHA.

31. The system of claim **22**, wherein the token generation module provides a plurality of tokens to the mobile communication device.

32. The system of claim **31**, wherein the plurality of tokens have different expiry times.

33. The system of claim **31**, wherein each of the plurality of tokens are for authentication to a different second network.

34. The system of claim **22** is included in a RADIUS server.

35. The system of claim **22** is included in a DIAMETER server.

36. The system of claim **34**, wherein the authenticator transmits an ACCESS-ACCEPT message to the second network and the mobile communication device.

37. The system of claim **22**, wherein the token is provided over a secure channel.

38. The system of claim **22**, wherein the first network operates under a CDMA 1×RTT, W-CDMA, CDMA EVDO, or GSM protocol.

39. The system of claim **22**, wherein the second network operates under an IEEE 802.11, IEEE 802.15, IEEE 802.16, or IEEE 802.20 protocol.

40. The system of claim **22**, wherein, if verification of the token contents is unsuccessful, the authenticator switches to an authentication protocol.

41. The system of claim **40**, wherein the authentication protocol is CHAP, PAP, EAP or EAPOW.

42. The system of claim **22**, wherein the token generation module is associated to the first network.

43. The system of claim **22**, wherein the token generation module is associated to the second network.

44. The system of claim **22**, wherein the authenticator is associated to the first network.

45. The system of claim **22**, wherein the authenticator is associated to the second network.

46. A method for authenticating to a heterogeneous network, comprising:

receiving a token over a first network to which a mobile communication device is authenticated; sending the token to an authenticator over a second heterogeneous network;

receiving authorization to access the second network from the authenticator based on a verification of contents of the token.

47. The method of claim **46**, wherein the token contents include a username and password for access to the second network.

48. The method of claim **46**, wherein the token expires at a predetermined expiry time.

49. The method of claim **46**, wherein receiving the token is preceded by initiating a request for a token.

50. The method of claim **46**, wherein a plurality of tokens are received.

51. The method of claim **50**, wherein the plurality of tokens are each for access to a different network.

52. The method of claim **50**, wherein the plurality of tokens each expire at different times.

53. The method of claim **50**, wherein sending the token includes selecting one of the plurality of tokens.

54. The method of claim **46**, wherein receiving authorization includes receiving an ACCESS-ACCEPT message.

55. The method of claim **46**, wherein the token is provided over a secure channel.

56. The method of claim **46**, wherein the first network operates under a CDMA 1×RTT, W-CDMA, CDMA EVDO, or GSM protocol.

57. The method of claim **46**, wherein the second network operates under an IEEE 802.11, IEEE 802.15, IEEE 802.16, or IEEE 802.20 protocol.

58. The method of claim **46**, wherein, if verification of the token contents is unsuccessful, authentication of the mobile communication device to the second network proceeds under an authentication protocol.

59. The method of claim **58**, wherein the authentication protocol is CHAP, PAP, EAP or EAPOW.

60. A mobile communication device, comprising:

means to receive a token over a first network, the token containing credentials for authentication to a second network; and

means to forward the token over the second network for authentication.

61. A communications network having authentication functions; comprising:

an authentication system having a token generation module to provide a token to a mobile communication device over the communications network; and an authenticator to receive the token from the mobile communication device over a separate network, to verify a token contents, and to grant the mobile communication device access to the separate network based on the verification of the token contents.

62. A communication system, comprising:

a mobile communication device;

a first network to which the mobile communication is authenticated; and

an authentication system having a token generation module to provide a token to a mobile communication device over the first network; and an authenticator to receive the token from the mobile communication device over a separate network, to verify a token contents, and to grant the mobile communication device access to the separate network based on the verification of the token contents.

* * * * *