Office de la Propriété Intellectuelle du Canada
Un organisme d'Industrie Canada

Canadian Intellectual Property Office
An agency of Industry Canada

CA 2817167 C 2016/09/06

(11)(21) 2 817 167

(12) BREVET CANADIEN
CANADIAN PATENT

(13) C

(86) Date de dépôt PCT/PCT Filing Date: 2011/03/01
(87) Date publication PCT/PCT Publication Date: 2012/05/18
(45) Date de délivrance/Issue Date: 2016/09/06
(85) Entrée phase nationale/National Entry: 2013/05/07
(86) N° demande PCT/PCT Application No.: CN 2011/071433
(87) N° publication PCT/PCT Publication No.: 2012/062065
(30) Priorité/Priority: 2010/11/09 (CN201010537984.9)

(51) Cl.Int./Int.Cl. *H01L 33/00* (2010.01)

(72) Inventeurs/Inventors:
ZHANG, HONGJIE, CN;
ZHANG, MING, CN;
LI, CHENGYU, CN;
ZHAO, KUN, CN;
LI, DONGMING, CN;
ZHANG, LI, CN

(73) Propriétaires/Owners:
SICHUAN SUNFOR LIGHT CO., LTD., CN;
CHANGCHUN INSTITUTE OF APPLIED CHEMISTRY, CHINESE ACADEMY OF SCIENCES, CN

(74) Agent: SMART & BIGGAR

(54) Titre : DISPOSITIF LUMINEUX A LUMIERE BLANCHE A DEL ET COURANT ALTERNATIF
(54) Title: AC WHITE LED DEVICE

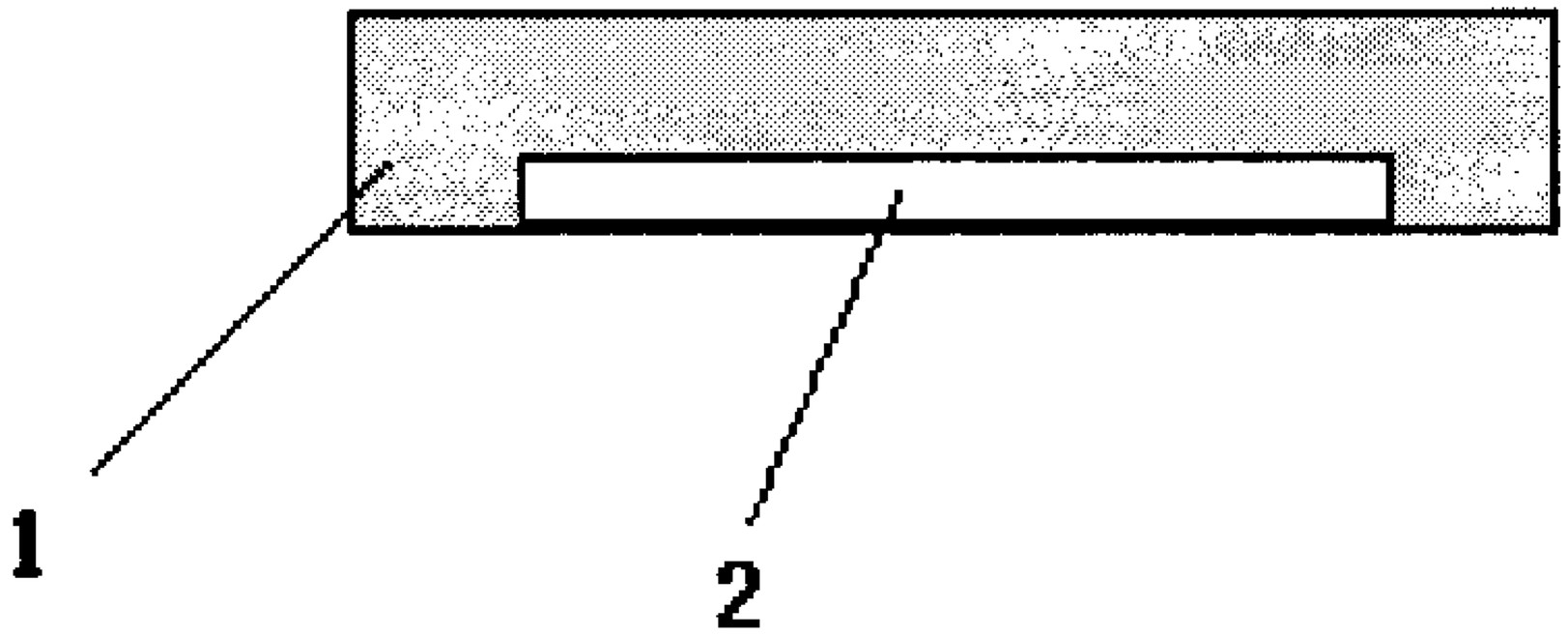

(57) Abrégé/Abstract:
An Alternate Current (AC) white Light-Emitting Diode (LED) device is provided, which belongs to the technical field of white LED manufacturing. The problem to be solved by the present invention is to low-costly overcome a series of deficiencies such as the stroboflash of an AC driven LED, and the heat dissipation difficulty caused by an integrated packaging of multiple LEDs. A white LED unit includes an LED chip and a light emitting material that can emit light when being excited by the LED chip. The luminous lifetime of the light emitting material is 1~1 00 ms. The LED chip only comprises one PN junction. The light emitted by the LED chip is mixed with the light emitted by the light emitting material to form white light. The white LED unit is driven by AC with a frequency not more than 100 Hz. The white LED device of prevent invention uses the single PN junction chip, rather than the prior integrated packaged AC multi-LED chip.

ABSTRACT

An Alternate Current (AC) white Light-Emitting Diode (LED) device is provided, which belongs to the technical field of white LED manufacturing. The problem to be solved by the present invention is to low-costly overcome a series of deficiencies such as the stroboflash of an AC driven LED, and the heat dissipation difficulty caused by an integrated packaging of multiple LEDs. A white LED unit includes an LED chip and a light emitting material that can emit light when being excited by the LED chip. The luminous lifetime of the light emitting material is 1~100 ms. The LED chip only comprises one PN junction. The light emitted by the LED chip is mixed with the light emitted by the light emitting material to form white light. The white LED unit is driven by AC with a frequency not more than 100 Hz. The white LED device of prevent invention uses the single PN junction chip, rather than the prior integrated packaged AC multi-LED chip.

AC WHITE LED DEVICE

Field of the Invention

The present invention relates to an Alternate Current (AC) white Light-Emitting Diode (LED) device, which belongs to the technical field of white LED manufacturing, and particularly, to an AC white LED device made of a light emitting material having a specific lifetime.

Background of the Invention

Currently, the LED is used in the fields of illumination, display, backlight, etc., and attracts extensive attentions due to its advantages such as energy saving, durable and pollution free. There are many solutions for implementing the white LED, and presently the most mature technical solution for manufacturing the white LED is to implement white light emission by combining the blue light LED chip with the yellow fluorescent powder. *Appl. Phys. Lett.* published in 1967 (refer to volume 11, page 53) reports a light emitting material $Y_3Al_5O_{12}$: Ce^{3+} which emits yellow light, with a maximum light emitting wavelength of 550 nm and a lifetime less than 100 ns. *Appl. Phys. A* published in 1997 (refer to volume 64, page 417) reports that white light emission of an LED is implemented using the yellow light emitted by $Y_3Al_5O_{12}$: Ce^{3+} and blue light gallium nitride, which is the most mature technical solution for manufacturing the white LED at present. But in practical applications, with the increase of the temperature of the working device, the luminous intensities of the blue light LED chip and the fluorescent powder decrease, wherein the luminous intensity of the fluorescent powder decreases obviously, thus the usage of the LED is influenced.

The conventional LED is driven by the direct current (DC), but most of the household, industrial, commercial or public electricity is supplied in the form of AC, thus a rectifier transformer must be accompanied for AC-DC conversion when the LED is used for illumination, etc. But in the process of AC-DC conversion, a power loss up to 15~30% will be caused. In addition, the conversion device has a short lifetime and a high cost, while it requires a lot of works and time in installation, so the efficiency is low.

The American patent US 7,489,086 B2 "AC LIGHT EITTING DIODE AND AC LED DRIVE METHODS AND APPARATUS" provides an AC LED device, which mainly enables an integrated packaged LED device to work in a frequency higher than 100 Hz, so as to compensate for the stroboflash of light emission of the LED device in the AC working state with a visual persistence effect of naked eyes. The Chinese patent No. 200910307357.3 discloses a light emitting material $Y_2O_3 \bullet Al_2O_3 \bullet SiO_2$: Ce•B•Na•P with yellow long afterglow phenomenon and a white LED device using the same.

The Chinese patent CN100464111C discloses an AC LED lamp using LED chips of different emitting colors connected in parallel in an AC power supply, and it mainly describes different colors of LED chips used together for emitting white light, and the specific circuit thereof, such as red, green and blue light emitting chips. The international patent WO2004/023568A1 "LIGHT-EMITTING DEVICE HAVING LIGHT-EMITTING ELEMENTS" proposes to install a plurality of small LED chip arrays on a sapphire substrate, so as to provide a light emitting device that can be driven by an AC power supply. On the basis of similar ideas, the Seoul Semiconductor of South Korea and the Industrial Technology Research Institute of Taiwan integratedly package a lot of superfine LED grains onto a substrate referred to as AC LED chip. The core of the above AC LED technology is the microelectronic circuit processing technology integratedly packaging a lot of micro grains, e.g., the AC LED chip manufactured by the Industrial Technology Research Institute of Taiwan integratedly packages hundreds of tiny LEDs in an area of 1 mm^2. But it is difficult to process the AC LED chip, and problems such as poor heat dissipation will be caused as the large number of microchips are integrated in a narrow substrate space.

In order to enable the white LED device to overcome the stroboflash under the AC power supply mode and improve the heat dissipation, persons skilled in the art always make unremitting efforts.

Summary of the Invention

The present invention relates to a white LED device which overcomes or at least mitigates a series of deficiencies such as the stroboflash

under the AC power supply mode and the heat dissipation difficulty of the existing white LED device.

The present invention relates to a white Light-Emiting Diode (LED) unit, comprising an LED chip and a light emitting material capable of emitting light when being excited by the LED chip, characterized in that, the LED chip only comprises one light emitting PN junction, the luminous lifetime of the light emitting material is 1 to 100 ms, the luminous brightness of powered off chip under non-constant current condition is compensated for with afterglow of the light emitting material, and the light emitted by the LED chip is mixed with the light emitted by the light emitting material to form white light.

Further, a white LED unit, comprising an LED chip and a light emitting material capable of emitting light when being excited by the LED chip, wherein the LED chip only comprises one light emitting PN junction, the luminous lifetime of the light emitting material is 10-30 ms, and the light emitted by the LED chip is mixed with the light emitted by the light emitting material to form white light.

According to the definition of luminescence, the luminous lifetime of the light emitting material is the time for decreasing the luminous intensity of the material to be 1/e of the maximum intensity in the excitation.

The white LED unit is driven by Alternate Current (AC) with a frequency not more than 100 Hz, and preferably 50 to 60 Hz. The luminous brightness of the powered off chip under non-constant current condition may be compensated for with afterglow of the light emitting material, so that the AC driving is more practical.

The white LED unit of the present invention overcomes or at least mitigates the stroboflash caused by the AC power supply by using the normal single PN junction LED chip, rather than the prior AC LED chip integrating a plurality of micro grains, thus the production is simple and the cost is low.

In which, the light emitted by the LED chip is ultraviolet light in a range of 200 nm to 380 nm or visible light in a range of 380 nm to 780 nm.

In the present invention, the light emitting material emits light when being excited by the LED chip, and the overall visual effect of the emitted light is the white light, or the overall visual effect of the light emitted by the light emitting material and the light emitted

by the chip is the white light.

The light emitting material is at least one of $CaS:Eu^{2+}$; $CaS:Bi^{2+}$, Tm^{3+}; $ZnS:Tb^{3+}$; $CaSrS_2:Eu^{2+}$, Dy^{3+}; $SrGa_2S_4:Dy^{3+}$; $Ga_2O_3:Eu^{3+}$; $(Y,Gd)BO_3:Eu^{3+}$; $Zn_2SiO_4:Mn^{2+}$; $YBO_3:Tb^{3+}$; $Y(V,P)O_4:Eu^{3+}$; $SrAl_2O_4:Eu^{2+}$; $SrAl_2O_4:Eu^{2+}$, B^{3+}; $SrAl_2O_4:Eu^{2+}$, Dy^{3+}, B^{3+}; $Sr_4Al_{14}O_{25}:Eu^{2+}$; $Sr_4Al_{14}O_{25}:Eu^{2+}$, Dy^{3+}, B^{3+}; $BaAl_2O_4:Eu^{2+}$; $CaAl_2O_4:Eu^{2+}$; $Sr_3SiO_5:Eu^{2+}$, Dy^{3+}; $BaMgAl_{10}O_{17}:Eu^{2+}$, Mn^{2+}; $Tb(acac)_2(AA)phen$; $Y_2O_2S:Eu^{3+}$; $Y_2SiO_5:Tb^{3+}$; $SrGa_2S_4:Ce^{3+}$; $Y_3(Al,Ga)_5O_{12}:Tb^{3+}$; $Ca_2Zn_4Ti_{15}O_{36}:Pr^{3+}$; $CaTiO_3:Pr^{3+}$; $Zn_2P_2O_7:Tm^{3+}$; $Ca_2P_2O_7:Eu^{2+}$, Y^{3+}; $Sr_2P_2O_7:Eu^{2+}$, Y^{3+}; $Lu_2O_3:Tb^{3+}$; $Sr_2Al_6O_{11}:Eu^{2+}$; $Mg_2SnO_4:Mn^{2+}$; $CaAl_2O_4:Ce^{3+}$, Tb^{3+}; $Sr_4Al_{14}O_{25}:Tb^{3+}$; $Ca_{10}(PO_4)_6(F,Cl)_2:Sb^{3+}$, Mn^{2}; $Sr_2MgSi_2O_7:Eu^{2+}$; $Sr_2CaSi_2O_7:Eu^{2+}$; $Zn_3(PO4)_2:Mn^{2+}$, Ga^{3+}; $CaO:Eu^{3+}$; $Y_2O_2S:Mg^{2+}$, Ti^{3+}; $Y_2O_2S:Sm^{3+}$; $SrMg_2(PO_4)_2:Eu^{2+}$, Gd^{3+}; $BaMg_2(PO_4)_2:Eu^{2+}$, Gd^{3+}; $Zn_2SiO_4:Mn^{2+}$,As^{5+}; $CdSiO_3:Dy^{3+}$; $MgSiO_3:Eu^{2+}$ and Mn^{2+}.

The preferable light emitting material is at least one of $Ca_2P_2O_7:Eu^{2+}$, Y^{3+}; $Sr_2P_2O_7:Eu^{2+}$, Y^{3+}; $Sr_4Al_{14}O_{25}:Eu^{2+}$, Dy^{3+}, B^{3+}; $SrAl_2O_4:Eu^{2+}$, Dy^{3+}, B^{3+}; $Zn_2SiO_4:Mn^{2+}$, As^{5+}; $Zn_2P_2O_7:Tm^{3+}$; $Y_2O_2S:Eu^{3+}$; $Sr_4Al_{14}O_{25}:Tb^{3+}$; $Zn_3(PO_4)_2:Mn^{2+}$, Ga^{3+}; and $CaS:Eu^{2+}$.

In the white LED unit of the present invention, each LED chip only comprises one light emitting PN junction.

In one aspect, the invention relates to a white Light-Emitting Diode (LED) unit, comprising an LED chip capable of emitting ultraviolet light in a range of 200 nm to 380 nm and a light emitting material capable of emitting light when being excited by the LED chip, wherein the LED chip only comprises one light emitting PN junction and is drivable by Alternate Current (AC) with a frequency not more than 100 Hz, and the light emitted by the LED chip is mixed with the light emitted by the light emitting material to form white light, wherein the light emitting material is one of: (a) a combination of $Zn_2P_2O_7:Tm^{3+}$ and $Zn_3(PO_4)_2:Mn^{2+}$; (b) $CaAl_2O_4:Dy^{3+}$; (c) a combination of $Sr_2P_2O_7:Eu^{2+}$, Y^{3+} and $Sr_4Al_{14}O_{25}:Eu^{2+}$, Dy^{3+}, B^{3+} and $Ca_4O(PO_4)_2:Eu^{2+}$ and $Zn_3(PO_4)_2:Mn^{2+}$, Ga^{3+}; or d) a combination of $Sr_2P_2O_7:Eu^{2+}$, Y3+ and $Sr_4Al_{14}O_{25}:Eu^{3+}$ and $Y_2O_2S:Eu^{3+}$.

Brief Description of the Drawings

Fig. 1 illustrates a schematic diagram of a unidirectional series circuit of an AC white LED device of the present invention;

Fig. 2 illustrates a schematic diagram of a reverse parallel circuit of an AC white LED device of the present invention;

Fig. 3 illustrates a schematic diagram of a bridge rectifier circuit having a normal conducted LED chip of an AC white LED device of the present invention;

Fig. 4 illustrates a schematic diagram of a bridge rectifier circuit having no normal conducted LED chip of an AC white LED device of the present invention;

Fig. 5 illustrates a schematic diagram of the constitution of a white LED unit, wherein 1 represents a light emitting material or a light emitting layer made of the light emitting material and a transparent medium, and 2 represents an LED chip; and

Fig. 6 illustrates color points of Examples 1 to 8 in CIE1931 chromatic diagram, wherein digits 1 to 8 are corresponding to Examples 1 to 8, respectively.

The white LED device of the present invention comprises the white LED unit and a drive circuit. The AC driven drive circuit is a unidirectional series circuit, a reverse parallel circuit or a bridge rectifier circuit, as illustrated in Figs. 1 to 4, or arbitrary combinations thereof. The frequency of the AC driven drive circuit is not more than 100 Hz.

In addition, the white LED device of the present invention further comprises a light guide covering layer, which is a non-planar light guide structure. Through the light guide covering layer, the light emitted by the LED chip and the light emitted by the light emitting material is reflected, refracted, diffused, dodged and finally mixed to output uniform light. In which, the light guide covering layer is a lens or other transparent covering layer, which can be doped with particles of non-light-emitting material with a diameter less than 5 μm, so that the light from the chip is diffused more uniformly.

The present invention has the following beneficial effects:

The prior white LED device uses YAG: Ce as the light emitting material, which will cause stroboflash phenomenon due to the change of AC cycle at a power frequency below 100 Hz. The present invention can maintain the light emission when the excitation light source disappears since the light emitting material having a specific lifetime is used,

thus in an AC white LED device based on the solution of the present invention, when the current cycle changes, the light emission of the light emitting material can be maintained for a certain time in the cycle, thereby compensating for the stroboflash of the LED chip caused by the AC fluctuation, and keeping a stable light output from the white LED device in the AC cycle. In addition, as the LED chip does not work in a half of the AC cycle, the heat effect is decreased, which is beneficial to overcome series of difficulties caused by the chip heating in the prior white LED device.

The above contents of the present invention are further described in details through the following embodiments. But it shall not be appreciated that the range of the subject matter of the present invention is limited thereto. Any technology implemented based on the above contents of the present invention shall fall within the range of the present invention. Particularly, about the constitution of the basic circuit, the embodiments of the

present invention only give the simplest reverse parallel circuit, but the AC white LED device of the present invention is not limited thereto, and it further includes for example a unidirectional series circuit and a bridge rectifier circuit.

Detailed Description of the Preferred Embodiments

Examples 1 to 8 overcome the stroboflash by implementing the white LED device made of a light emitting material shown in Table 1 and merchant normal LED chip in a general packaging technology, without using integrated chip dedicated to the AC LED.

Examples 1 to 8

Table 1

Example	LED chip (light emitting wavelength)	Light emitting material	Lifetime of light emitting material (ms)
1	Ultraviolet (254nm)	45wt%$Zn_2P_2O_7:Tm^{3+}$ 55wt%$Zn_3(PO4)_2:Mn^{2+},Ga^{3+}$	10
2	Ultraviolet (254nm)	$CaAl_2O_4:Dy^{3+}$	25
3	Ultraviolet (310nm)	15wt%$Sr_2P_2O_7:Eu^{2+}$, Y^{3+} 30wt%$Sr_4Al_{14}O_{25}:Eu^{2+},Dy^{3+},B^{3+}$ 15wt%$Ca_4O(PO_4)_2:Eu^{2+}$, 40wt%$Zn_3(PO_4)_2:Mn^{2+},Ga^{3+}$	30
4	Ultraviolet (365nm)	10wt%$Sr_2P_2O_7:Eu^{2+},Y^{3+}$ 30wt%$Sr_4Al_{14}O_{25}:Eu^{2+}$ 60wt%$Y_2O_2S:Eu^{3+}$	14
5	Purple light (400nm)	50wt%$SrMg_2(PO_4)_2:Eu^{2+},Gd^{3+}$ 50wt%$Ca_4O(PO_4)_2:Eu^{2+}$	4
6	Purple light (400nm)	40wt%$Sr_4Al_{14}O_{25}:Eu^{2+}$ 60wt%$Y_2O_2S:Eu^{3+}$	1
7	Blue light (450nm)	30wt%$SrAl_2O_4:Eu^{2+},B^{3+}$ 70wt%$CaS:Eu^{2+}$	100
8	Blue light (460nm)	60wt%$Y_2O_2S:Mg^{2+},Ti^{3+}$	48

		40wt%$SrAl_2O_4$:Eu^{2+}	

Test example 1: luminescence properties of the AC white LED device of the present invention

Table 2 shows the luminous brightness of the photos shot within 20 ms by the AC white LED device driven under 50 Hz AC using a high-speed scientific camera Sarnoff CAM512 which takes 300 photos per second. Reference 1 is an AC driven white LED device made in the same manner as examples 1 to 8 using the merchant 460 nm blue light chip packaged with a yellow light emitting material YAG: Ce (the luminous lifetime is 100 ns). Reference 2 is an AC driven white LED device made in the same manner as examples 1 to 8 using the merchant 460 nm blue light chip packaged with long lifetime materials SrA1204: Eu, Dy and Y2O2S: Eu, Mg, Ti (the luminous lifetime is more than 1s). In table 2, the brightness data is relative brightness without dimension.

Table 2

Time	3.33 ms	6.66 ms	9.99 ms	13.32 ms	16.65 ms	19.98 ms
Brightness of reference 1	2265	3466	0	2153	3570	0
Brightness of reference 2	746	998	670	702	965	712
Brightness of example 1	2931	3025	1455	3187	3443	1665
Brightness of example 2	3140	3373	1654	2884	3437	1877
Brightness of example 3	3200	3423	1506	3135	3362	1656
Brightness of example 4	2910	3190	1652	2723	3245	1850
Brightness of example 5	2250	2734	1468	2114	2800	1420
Brightness of example 6	2109	2636	1150	2213	2858	1163
Brightness of example 7	2017	2420	1569	2115	2654	1510
Brightness of example 8	1879	2000	1270	1746	2123	1303

Table 3 gives the normalized value of the maximum luminous brightness of each sample in the examples of Table 2.

Table 3

Time / Normalized brightness ratio	3.33 ms	6.66 ms	9.99 ms	13.32 ms	16.65 ms	19.98 ms
Reference 1	0.63445	0.97087	0	0.60308	1	0
Reference 2	0.74749	1	0.67134	0.70341	0.96693	0.71343
Example 1	0.85129	0.87859	0.4226	0.92565	1	0.48359
Example 2	0.91359	0.98138	0.48123	0.8391	1	0.54612
Example 3	0.93485	1	0.43996	0.91586	0.98218	0.48379
Example 4	0.89676	0.98305	0.50909	0.83914	1	0.57011
Example 5	0.80357	0.97643	0.52429	0.755	1	0.50714
Example 6	0.73793	0.92232	0.40238	0.77432	1	0.40693
Example 7	0.75998	0.91183	0.59118	0.79691	1	0.56895
Example 8	0.88507	0.94206	0.59821	0.82242	1	0.61375

As can be seen from Tables 2 and 3, the luminescence of the present invention is stable and slightly fluctuant in the AC cycle. But about reference 1, i.e., a white LED device made of the merchant blue light chip packaged with the conventional yellow light emitting material YAG: Ce having a short luminous lifetime, the luminescence is unstable and largely fluctuant in the AC cycle. It is clear that the present invention effectively and low-costly overcomes the stroboflash of the AC LED.

Although as illustrated by reference 2, the luminescence of the white LED device made of the light emitting material with long luminous lifetime is also slightly fluctuant in the AC cycle, the energy obtained by the material when the exciting light exists cannot be released quickly, so the light is weak (refer to Table 1), which is disadvantageous to be used as a light emitting material.

Table 4 shows the color coordinates and the color temperatures of the examples in Table 1 (measured using Minolta colorimeter CS-100A).

Table 4 CIE Color Coordinates and Color Temperatures

Color Coordinates	CIEx	CIEy	Related color temperature
Example 1	0.4076	0.3807	3312K

Example 2	0.3410	0.3102	4997K
Example 3	0.3279	0.2939	5725K
Example 4	0.3320	0.3210	5496K
Example 5	0.3802	0.3566	3815K
Example 6	0.3503	0.3002	4441K
Example 7	0.3104	0.3154	6746K
Example 8	0.3484	0.3516	4867K

As can be seen from Table 4, the above examples enable the white LED device to emit white light. The color point positions in the light emissions of respective examples in the CIE1931 chromaticity diagram are shown in Fig. 6.

Test example 2: light attenuation of the AC white LED device of the present invention

Table 5 shows the light attenuation data of examples 1 to 18 and the reference. The reference is a white LED device obtained by installing a white LED chip made of the merchant 460 nm blue light chip packaged with YAG: Ce in the general DC power supply mode at present. The test method is as follows: electrifying the AC white LED device of the example and the reference device, and measuring their luminous brightness in a certain interval with Minolta colorimeter CS-100. The results are shown in Fig. 5. The data in Fig. 5 is relative brightness without dimension, and the initial data is normalized.

Table 5

Time	1 h	1,000 h	1,500 h	2,500 h
Brightness of reference	100	98	97.1	96.3
Brightness of example 1	100	99.8	99.5	99.1
Brightness of example 2	100	99.5	99.4	99.3
Brightness of example 3	100	99.6	99.5	99
Brightness of example 4	100	99.7	99.3	99
Brightness of example 5	100	99.8	99.4	98.6
Brightness of example 6	100	99.5	99	98

Brightness of example 7	100	99.4	99	98.3
Brightness of example 8	100	99.3	99	98

As can be seen from the data in Fig. 5, the AC white LED device of the present invention has a light attenuation less than the AC white LED device in the prior art.

52755-8

CLAIMS:

1. A white Light-Emitting Diode (LED) unit, comprising an LED chip capable of emitting ultraviolet light in a range of 200 nm to 380 nm and a light emitting material capable of emitting light when being excited by the LED chip, wherein the LED chip only comprises one light emitting PN junction and is drivable by Alternate Current (AC) with a frequency not more than 100 Hz, and the light emitted by the LED chip is mixed with the light emitted by the light emitting material to form white light, wherein the light emitting material is one of:

(a) a combination of $Zn_2P_2O_7:Tm^{3+}$ and $Zn_3(PO_4)_2:Mn^{2+}$;

(b) $CaAl_2O_4:Dy^{3+}$;

(c) a combination of $Sr_2P_2O_7:Eu^{2+}$, Y^{3+} and $Sr_4Al_{14}O_{25}:Eu^{2+}$, Dy^{3+}, B^{3+} and $Ca_4O(PO_4)_2:Eu^{2+}$ and $Zn_3(PO_4)_2:Mn^{2+}$, Ga^{3+}; or

d) a combination of $Sr_2P_2O_7:Eu^{2+}$, Y3+ and $Sr_4Al_{14}O_{25}:Eu^{3+}$ and $Y_2O_2S:Eu^{3+}$.

2. The white LED device according to claim 1, wherein the LED chip is driven by AC with a frequency of 50 to 60 Hz.

3. An Alternate Current (AC) white Light-Emitting Diode (LED) device, comprising an AC driving circuit and at least one white LED unit according to claim 1 or 2, wherein the driving circuit is one or arbitrary combinations of a unidirectional series circuit, a reverse parallel circuit and a bridge rectifier circuit.

4. The AC white LED device according to claim 3, further comprising a light guide covering layer.

5. The AC white LED device according to claim 4, wherein the light guide covering layer is doped with particles of non-light-emitting material with a diameter less than 5 μm.

Drawings

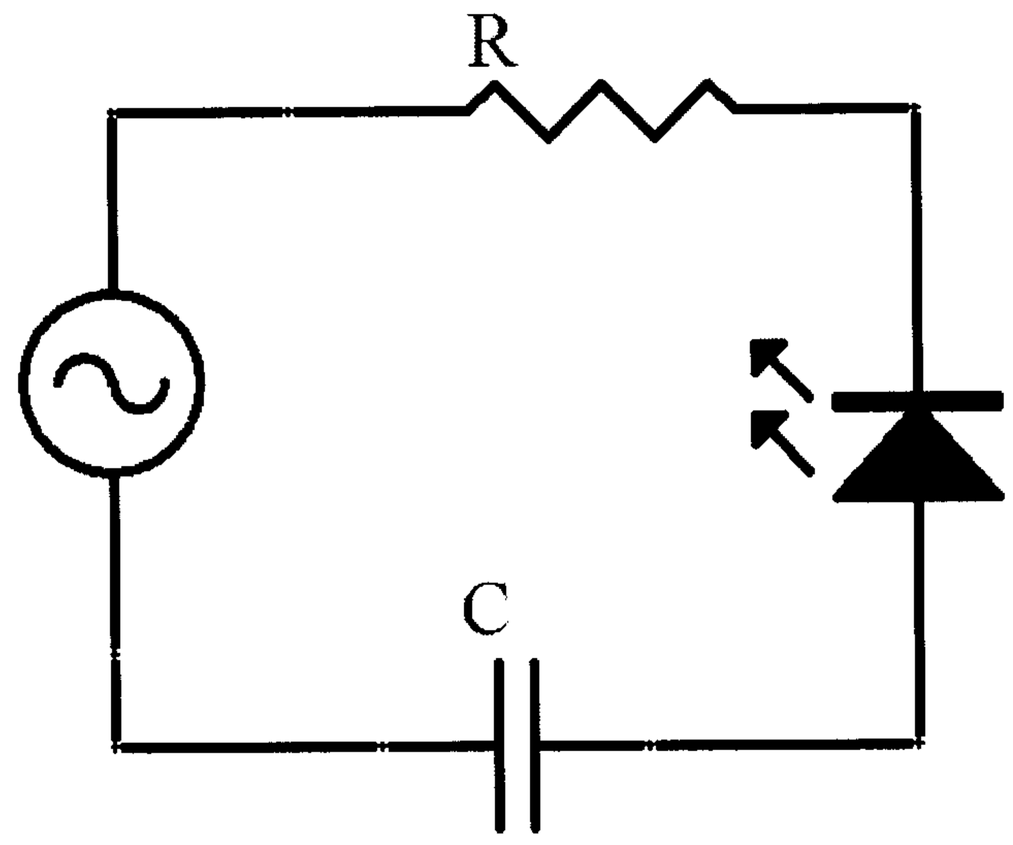

Fig. 1

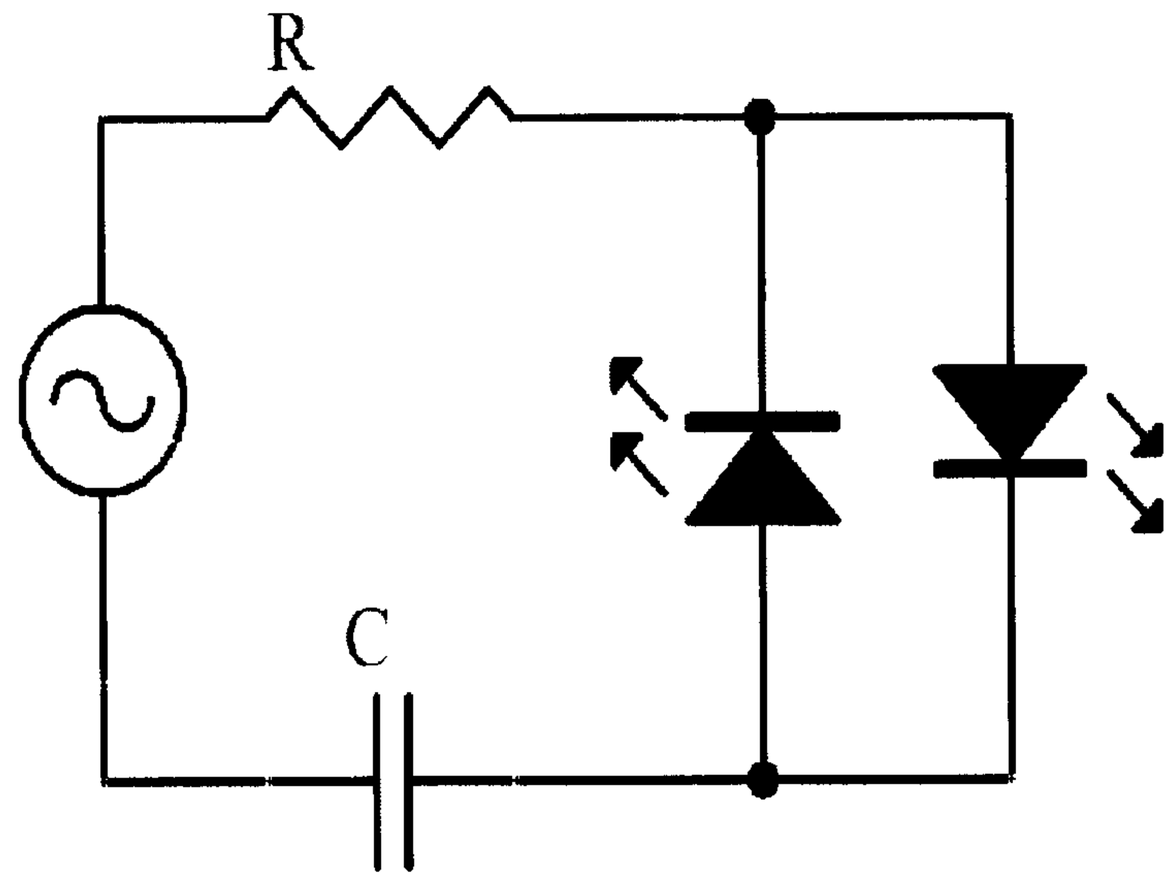

Fig. 2

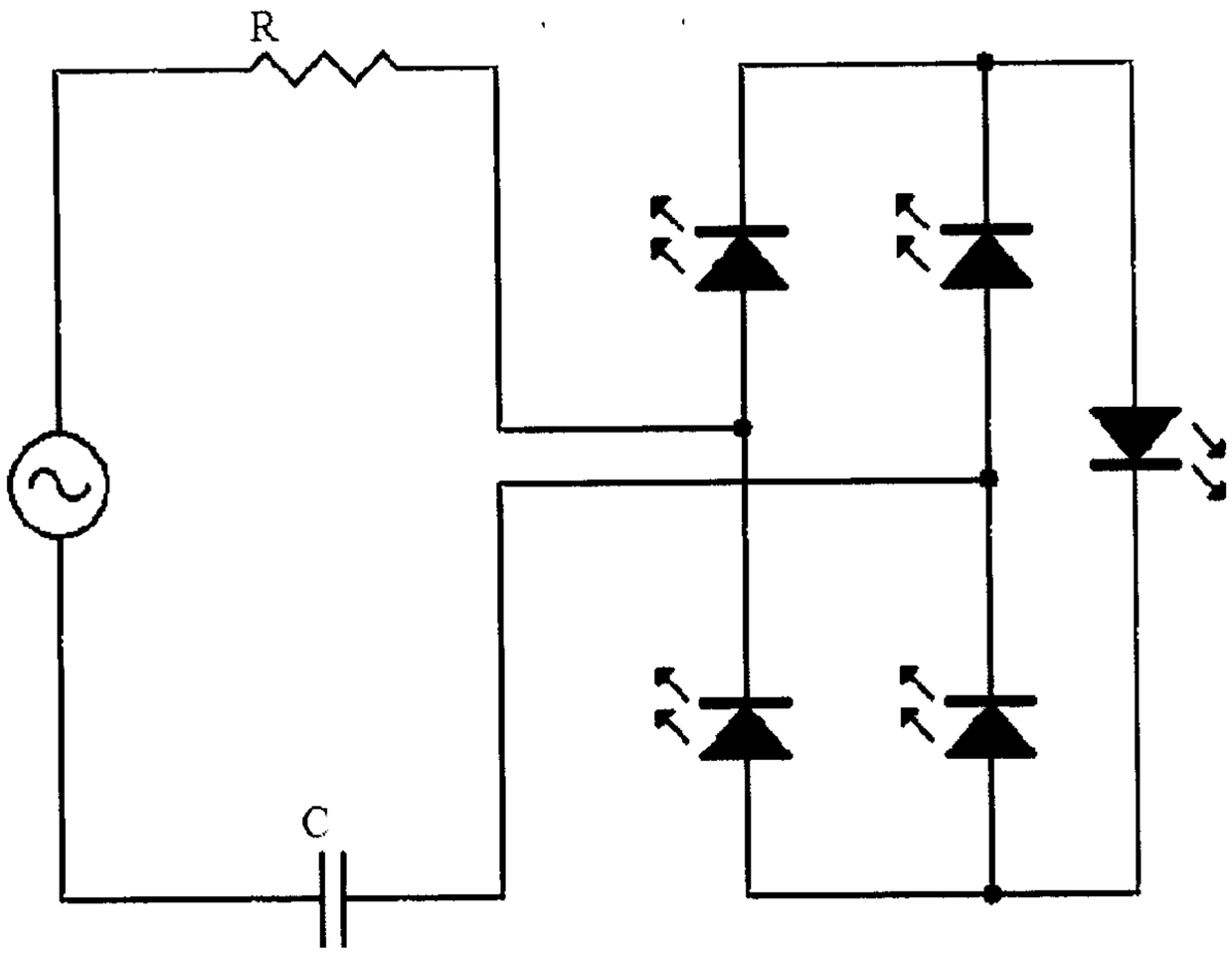

Fig. 3

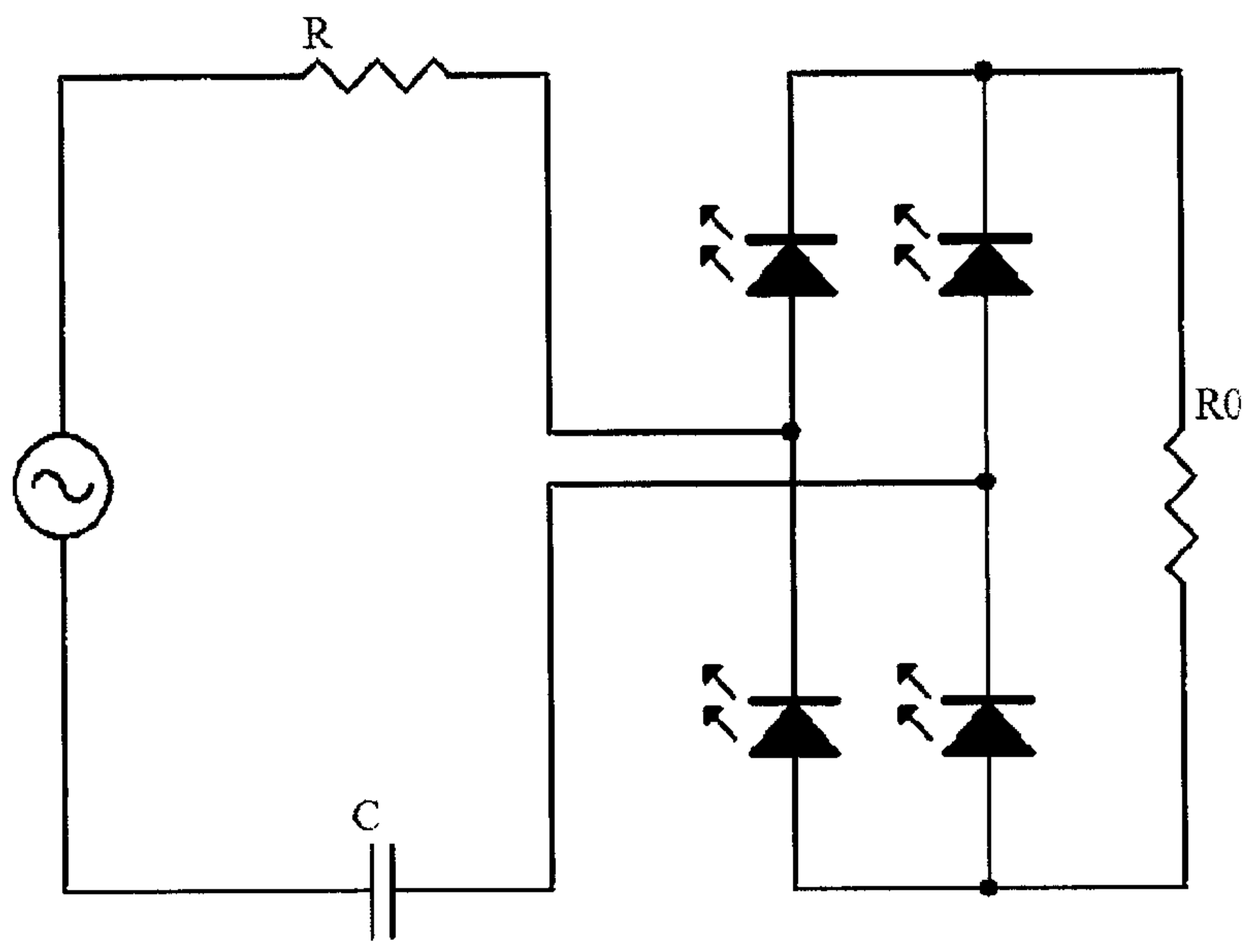

Fig. 4

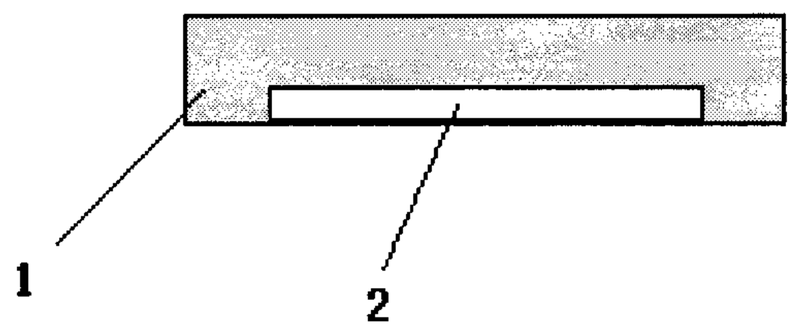

Fig. 5

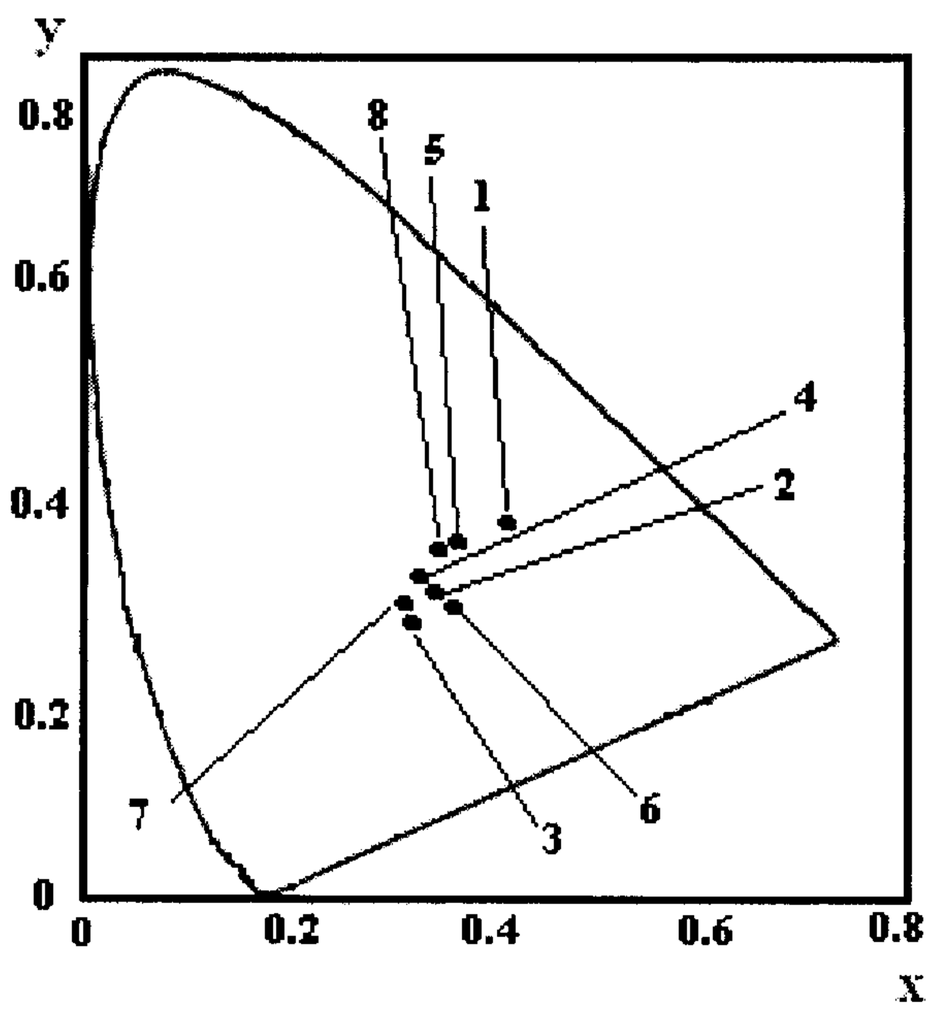

Fig. 6

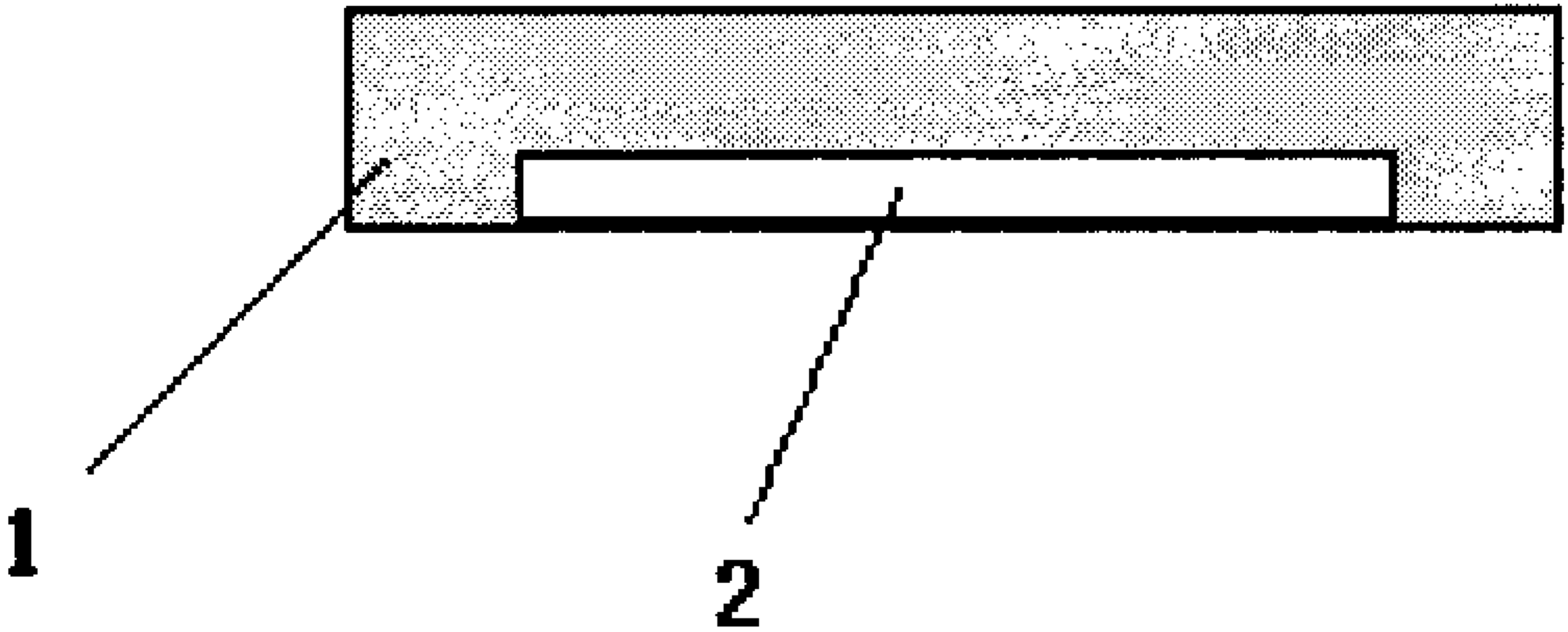
1
2