Jan. 10, 1939. L. HALL 2,143,481

CORD DISPENSER

Filed Dec. 1, 1937

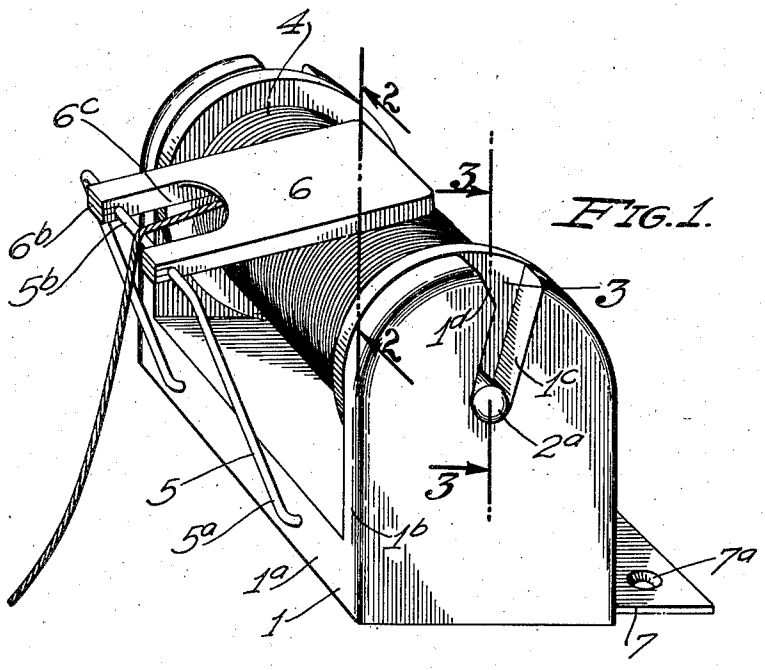

FIG. 1.

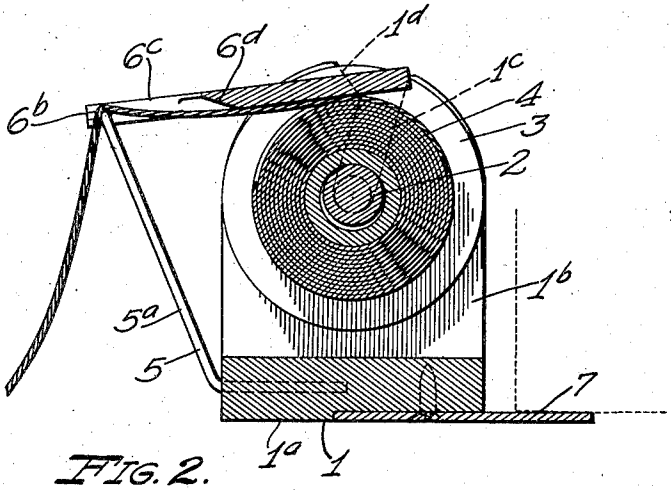

FIG. 2.

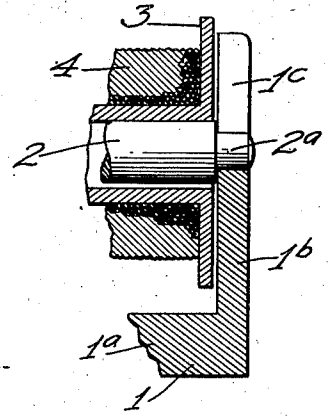

FIG. 3.

Inventor

LINCOLN HALL.

By William E. Hall

Attorney

Patented Jan. 10, 1939 2,143,481

UNITED STATES PATENT OFFICE

2,143,481

CORD DISPENSER

Lincoln Hall, Los Angeles, Calif.

Application December 1, 1937, Serial No. 177,547

3 Claims. (Cl. 242—156)

My invention relates to a twine or cord holder and particularly to such an article for dispensing the twine or cord.

One of the objects of this invention is to provide an article of this class whereby cord may be easily held, and dispensed, as desired, from a reel or spool on which it is wound.

Another object of this invention is to provide a supporting bracket into which a new reel or spool may be easily inserted and from which it may not easily be dislodged as the cord is withdrawn or unwound from the spool.

An important object of this invention is the provision of a simple brake for keeping the cord reasonably taut or from preventing the cord spool from spinning or rotating freely, thereby preventing the cord from tangling or ravelling.

Another important object of this invention is to provide a twine or cord dispenser of this class whereby the free end of the twine or cord is so located that it may be easily and quickly gripped.

A further object is to provide simple means whereby the holder or dispenser may be easily anchored under or to a stationary object to facilitate its use.

With these and other objects in view, as will appear hereinafter, I have devised a twine or cord dispenser having certain novel features of construction, combination, and arrangement of parts and portions, as will be hereinafter described in detail and particularly set forth in the appended claims, reference being had to the accompanying drawing and to the characters of reference thereon, which form a part of this application, in which:

Fig. 1 is a perspective view of my twine or cord dispenser in a preferred form of construction; and,

Figs. 2 and 3 are fragmentary sections thereof taken respectively at 2—2 and 3—3 of Fig. 1.

My holder or dispenser is supported mainly by a support 1 consisting of a flat base 1a having upright brackets 1b at its ends. These brackets have slots 1c extending from the middle portions of the brackets upwardly. At the bottom of these slots, which are rounded, are rotatably mounted trunnions 2a which are the reduced ends of a roller or spindle 2. On the larger intermediate portion of this roller or spindle is supported the reel or spool 3 upon which is wound the twine, string or cord 4. This spool, with the twine string or cord wound thereon, may be a commercial article, and may be merely loosely and removably placed on the roller or spindle when a new supply is necessary, and may be as easily and quickly removed.

At the front side of the article is an inverted U-shaped wire bracket 5, the lower ends of the legs 5a of which are bent and secured in the front edge of the base. On the cross portion 5b of the bracket 5 is pivotally mounted one end 6a of a flat brake member or shoe 6. This brake member or shoe extends over the spool and rests freely, intermediate its ends, on the twine or cord wound on the spool. This brake or brake member may be secured to the bracket by separating the cross portion 5b or inserting the cross portion 5b into position and securing it into place in any suitable manner, such as by wedge pieces 6b.

At the pivoted end of the brake is an eye 6c through which the free end of the cord is threaded and through which it is withdrawn from the spool. The edge of the eye nearest the spool is bevelled, as shown by 6d in Fig. 2, to facilitate withdrawal of the cord without injury to the latter.

The legs 5a of the wire bracket 5 are inclined outwardly or forwardly from the base, so that the free end of the cord, threaded through the eye, will depend freely from the end of the brake and wholly free of the bracket 5, so that it may be easily gripped or grabbed when desired to withdraw some of the cord.

The slots 1c, into which the ends of the spindle 2 are dropped and rotate, are inclined backwardly towards their upper ends, that is, they are inclined at an acute angle to the brake member 6, or to the plane passing through the eye and the top of the cord on the spool. The slots are so arranged that the spindle or trunnions 2a will not be readily lifted from the slots as the cord is withdrawn.

The upper end of the slots are widened, preferably by cutting away the portion of the brackets at the front sides of the slots, as indicated by 1d, to facilitate introduction of the trunnions into the slots.

The base of the support is provided with an apron 7, which is preferably a thin plate extended backwardly with the bottom side flush with the base. This apron or plate may be easily slipped under a heavy object for holding the article or dispenser while removing some of the cord. If desired, this apron may be provided with holes 7a for screwing the article to counter, table, or the like.

Though I have shown and described a particular construction, I do not wish to be limited to the same, but desire to include in the scope of my invention the construction, combination, and

arrangement substantially as set forth in the appended claims.

I claim:

1. In a cord dispenser, a support having spaced brackets, a cord spool revolubly supported by and between the brackets, and a brake pivotally supported at one end by the support considerably to one side of the spool and resting freely intermediate its ends on the cord on the spool, said brake having an eye extending a slight distance from the pivoted end toward the free end for receiving therethrough from the underside of the brake the free end of the cord on the spool.

2. In a cord dispenser, a support having extended therefrom a pair of spaced brackets, said brackets having parallel trunnion-receiving slots extending upwardly from their middle portions, a cord spool having trunnions extending beyond the ends of the spool and removably mounted at the bottom of the slots, a brake pivotally supported at one end by the support considerably in front of the spool and resting freely intermediate its ends on the cord on the spool, said brake having an eye means at its pivoted end through which the free end of the cord may be threaded, said slots being inclined at an acute angle to the plane passing through the eye means and the top of the cord on the spool.

3. In a cord dispenser, a support having a base and bracket means extending upwardly from the base, a cord spool revolubly supported by the bracket means, and a brake means having a supporting bracket, the bracket extending upwardly and outwardly from the base, said brake means having a brake portion pivoted at its one end on the bracket and resting intermediate its ends on the cord on the spool, the pivotal portion being located considerably to one side of and near the upper portion of the spool, said brake means having an eye means at said pivotal portion for receiving therethrough the free end of the cord on the spool.

LINCOLN HALL.