Feb. 18, 1930. H. B. SCOTT 1,747,396

RUBBING MACHINE

Filed May 31, 1922 4 Sheets-Sheet 1

FIG. 1

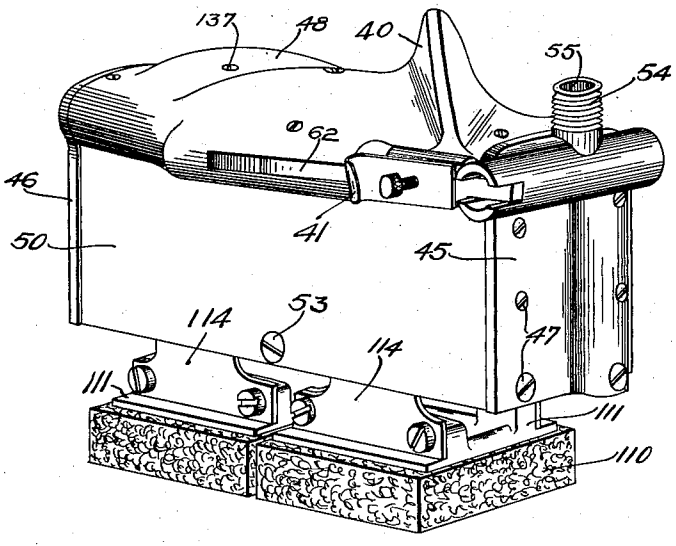

FIG. 2

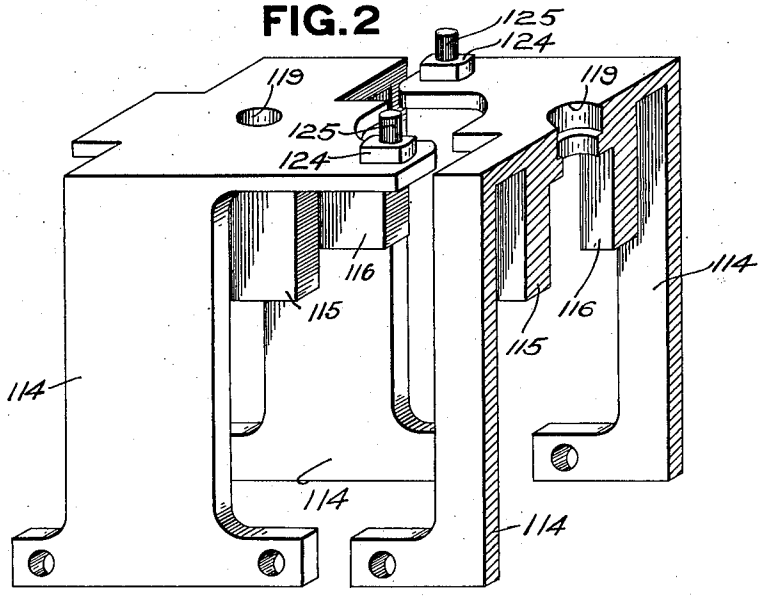

FIG. 3

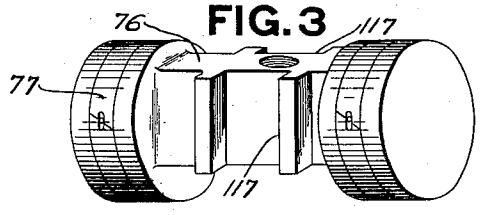

Inventor
Howard B. Scott
By Pearl Brust
and Henry E. Stauffer
His Attorneys

Feb. 18, 1930. H. B. SCOTT 1,747,396

RUBBING MACHINE

Filed May 31, 1922 4 Sheets-Sheet 2

FIG. 4

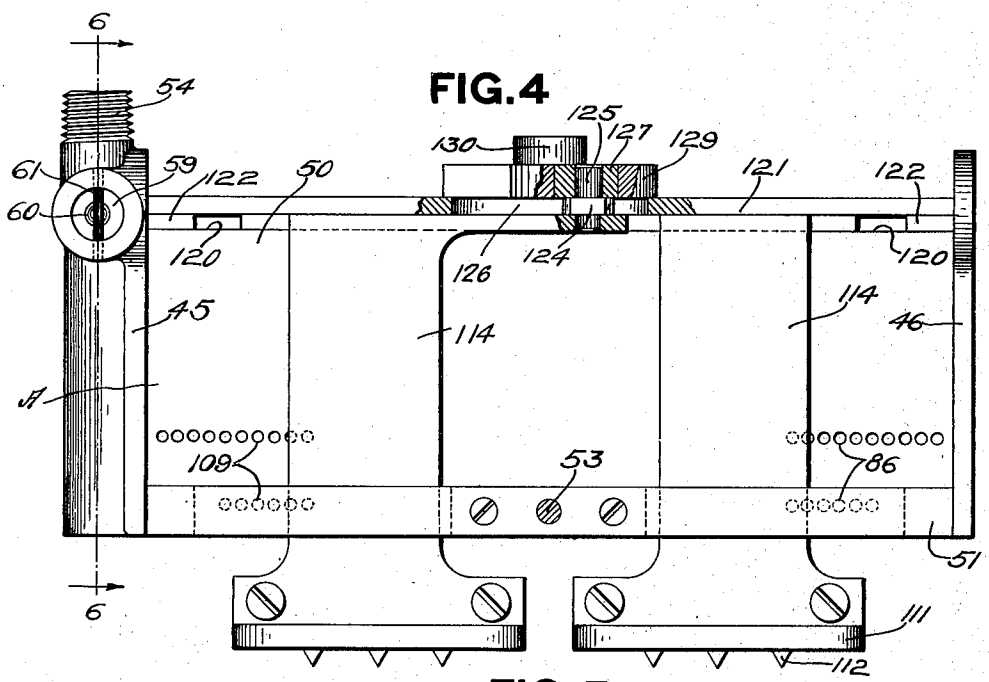

FIG. 5

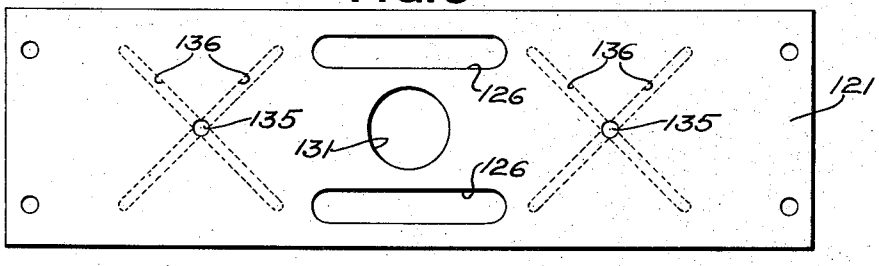

FIG. 6

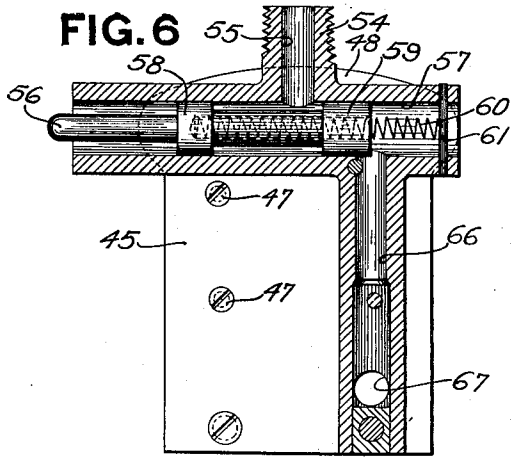

Inventor
Howard B. Scott
By Pearl Brust
and Henry E. Stauffer
His Attorneys

Feb. 18, 1930. H. B. SCOTT 1,747,396

RUBBING MACHINE

Filed May 31, 1922 4 Sheets-Sheet 3

FIG. 7

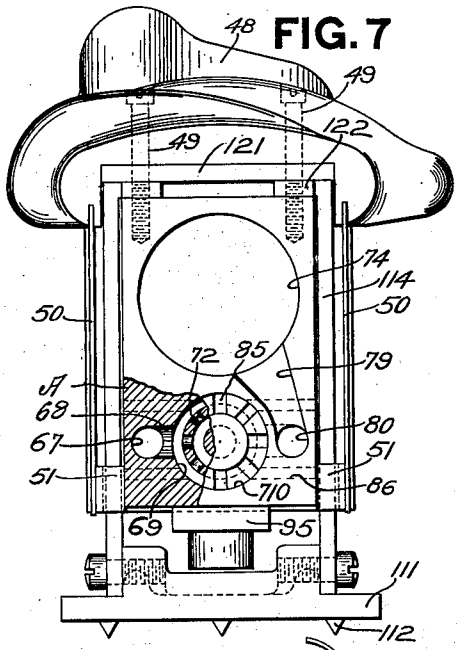

FIG. 8

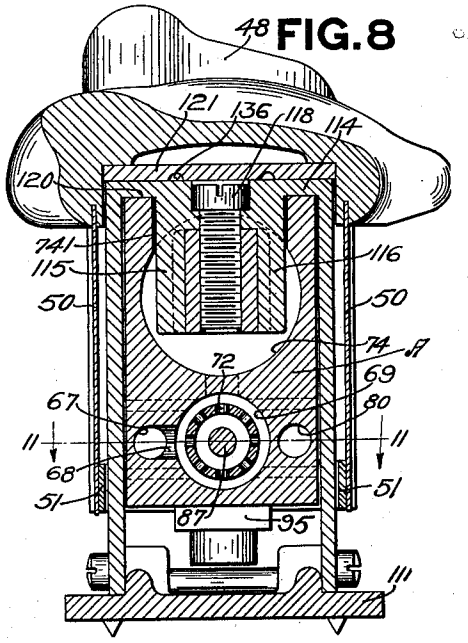

FIG. 9

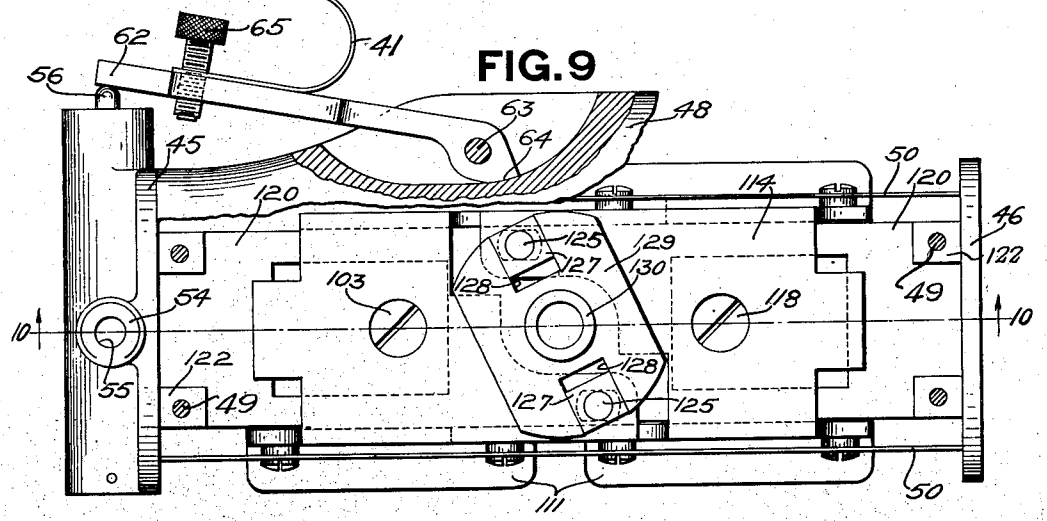

Inventor
Howard B. Scott
By Pearl Brust
and Henry E. Stauffer
His Attorneys

Feb. 18, 1930. H. B. SCOTT 1,747,396

RUBBING MACHINE

Filed May 31, 1922 4 Sheets-Sheet 4

FIG.10

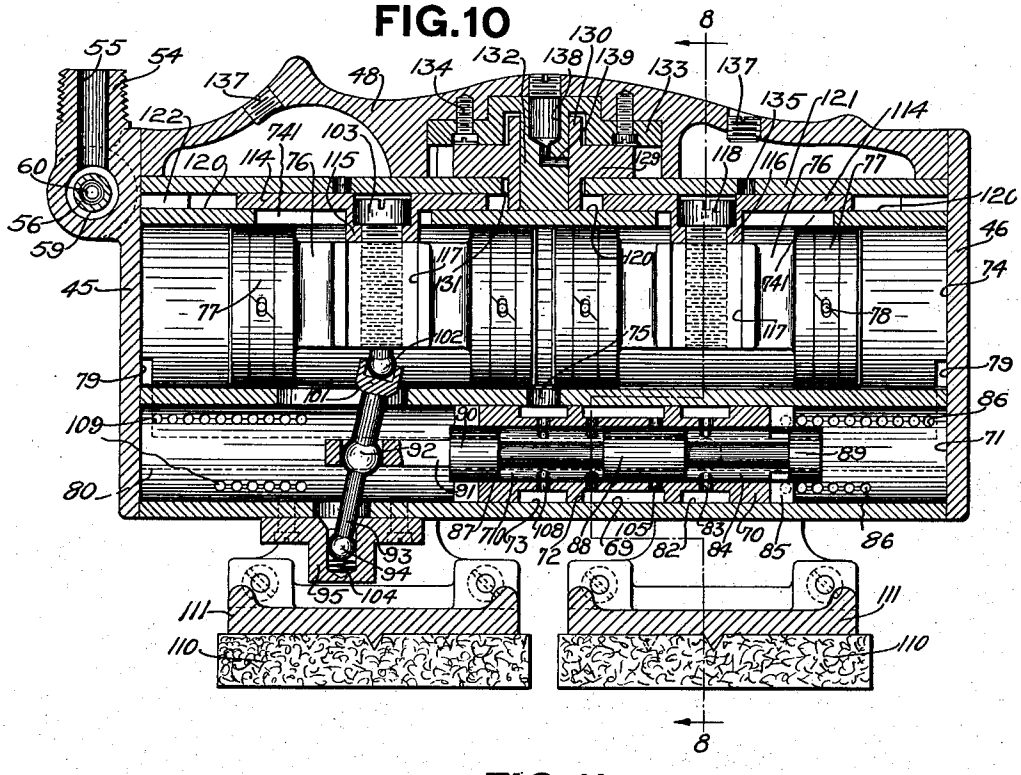

FIG.11

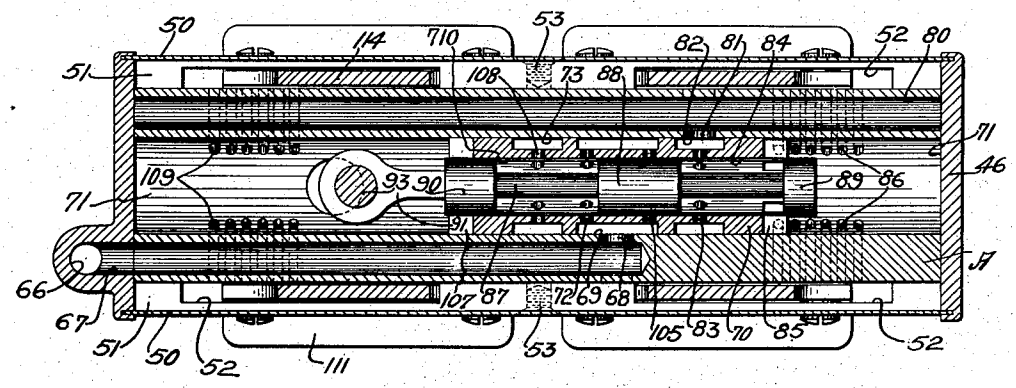

Inventor
Howard B. Scott
By Pearl Beyst
and Henry E. Haffner
His Attorneys

Patented Feb. 18, 1930 1,747,396

UNITED STATES PATENT OFFICE

HOWARD B. SCOTT, OF DAYTON, OHIO, ASSIGNOR, BY MESNE ASSIGNMENTS, TO THE NATIONAL CASH REGISTER COMPANY, OF DAYTON, OHIO, A CORPORATION OF MARYLAND

RUBBING MACHINE

Application filed May 31, 1922. Serial No. 564,774.

This invention relates to portable rubbing machines and the like, particularly adapted for use in finishing varnished surfaces of either metal or wood which require rubbing with pumice, abrasive paper or cloth, or some similar material as a step in the finishing operation.

One object of this invention is to provide a small, light, compact, high-speed machine which will have the functions above mentioned and which will provide a more efficient means of accomplishing the desired results than anything now in use.

Another object of the invention is to provide a machine which will be practically impervious to the dust and grit incident to the operation of a device of this kind.

It is not desired to limit the invention to the above usage, as it is apparent that it can be used for a variety of brushing, burnishing, buffing, polishing or sanding operations.

With these and incidental objects in view, the invention includes certain novel features of construction and combinations of parts, the essential elements of which are set forth in appended claims, and a preferred form or embodiment of which is hereinafter described with reference to the drawings which accompany and form part of this specification.

Of said figures:

Fig. 1 is a perspective view of the complete machine.

Fig. 2 is a detail isometric view of members which connect the pistons with the rubbing pads, one of said members being shown in section.

Fig. 3 is a detail isometric view of one of the pistons.

Fig. 4 is a view in side elevation of the device with the top plate and the side plate removed some of the mechanism being shown in section.

Fig. 5 is a detail plan view of the bearing plate which is adapted to prevent any binding of the piston in the cylinder by reason of downward pressure exerted by the operator.

Fig. 6 is a sectional view showing the main inlet valve, and is taken on the line 6—6 of Fig. 4, looking in the direction of the arrows.

Fig. 7 is a view in end elevation with the end plate removed and some of the parts broken away for the sake of clearness.

Fig. 8 is a sectional view taken through the machine on the line 8—8 of Fig. 10.

Fig. 9 is a top plan view of the machine with the cover plate removed.

Fig. 10 is a longitudinal sectional view taken on the line 10—10 of Fig. 9, looking in the direction of the arrows.

Fig. 11 is a horizontal sectional view taken on the line 11—11 of Fig. 8, looking in the direction of the arrows.

In general, the form selected to illustrate one embodiment of the invention, includes a body portion having parallel cylindrical holes bored therethrough from end to end, the larger bore constituting a motor cylinder, and the smaller bore a valve chamber therefor.

Two double-headed pistons are arranged to traverse the cylinder, the pistons reciprocating simultaneously towards and from each other.

To accomplish this, valve mechanism in the smaller bore is controlled by one of the pistons to admit air pressure or other motive fluid alternately between the pistons to force the pistons apart, and then to the ends of the cylinder to drive the pistons towards each other.

Provision is, of course, made to exhaust the spent fluid from in front of the pistons.

Fastened to each piston is a member which carries a rubbing pad of felt or any other suitable material which is rapidly reciprocated by the action of the pistons to perform the rubbing operation. The members carrying the rubbing pads are connected to each other in such a manner as to synchronize their movement. And in order to prevent as far as possible the entry of dust, dirt and other extraneous material incident to the operation of the machine, to the working parts thereof, the mechanism has been enclosed in a casing, and the ports so arranged as to direct the exhaust into this casing and out through the slots formed therein. This not only operates to prevent the entry of dust, but also expels that which may have worked its way into the casing.

Fast to each end of the body portion A (Fig. 11) of the device are two plates 45 and 46 (Fig. 1), which are held in position by means of screws 47 and which close the ends of longitudinally extending operating cylinder 74, and valve chamber 71, respectively. A top plate 48 is fastened to the body portion A by long screws 49 (Fig. 7), the contour of said plate being formed to fit the palm of the hand of the operator.

The upper edges of the end plates 45 and 46 extend above the top plane of the body portion A, and the top plate 48 fits closely between the end plates to exclude dirt and similar material.

The side edges of the end plates 45 and 46, as well as the side edges of the top plate 48, extend beyond the sides of the body portion A, the under face of such projecting edges of the top plate being grooved, as are also the projecting side edges of the end plates 45 and 46, to accommodate the top and end edges of two casing plates 50 extending along and covering the sides of the body portion A, and spaced apart therefrom. Fillet bars 51 (Figs. 4, 7, 8 and 11), one on each side, are fastened to the main body portion A, near the lower edges of the casing plates 50, and are cut away at 52 (Fig. 11) to permit the connections between the pistons and the rubbing pads to be reciprocated, as will be hereinafter described. The casing plates 50 are held in place in their grooves by screws 53 (Figs. 1, 4 and 11).

Control valve

The air or other motive power, under pressure, is brought to the device through any suitable flexible tubing which is connected to an upwardly extending nipple 54 (Fig. 10), formed integral with the end plate 45. The nipple 54 contains an inlet passage 55 (Fig. 6), which conducts the pressure to the main control valve mechanism. This control valve mechanism includes a plunger 56 (Fig 6) slidably mounted in a cylindrical chamber 57 open at both ends and extending across the end plate 45. This plunger 56 is provided with two heads 58 and 59 spaced apart and normally located on opposite sides of the juncture of the passage 55 with the chamber 57, to prevent the escape of pressure when the valve is in its closed position, as shown in Fig. 6. A spring 60, one end of which is seated in a long seat formed in the right hand end of the plunger 56, and the other end of which bears against a pin or abutment 61 extending across the adjacent open exhaust end of the chamber 57, tends to force the plunger 56 toward the left (Fig. 6) in order to keep the valve closed.

When it is desired to open the valve, the plunger 56 is moved toward the right (Fig. 6) by means of a lever 62 (Figs. 1 and 9), pivoted at 63 in a guide slot in the top plate 48. Slots are cut in the walls of the valve chamber 57 (Fig. 1) at one end to permit the lever 62 to completely open the valve. The opposite end of the lever 62 is provided with a cam portion 64, which, when the valve is closed, abuts against the wall of the guide slot formed in said top plate, (Fig. 9) and thereby limits the spring-actuated movement of plunger 56 toward the left (Fig. 6). The lever 62 carries a cap screw 65 which limits the movement of the lever toward the right. This screw can be adjusted to vary the amount of pressure admitted to the machine, which will, of course, control the speed at which it operates.

When the control valve is closed and the plunger 56 is returned to its left hand position, as shown in Fig. 6, the head 59 uncovers the end of a passage 66 which conducts the pressure through various valve chambers to be later described, to the main operating cylinder. This permits the exhaust which is at this time under pressure in the machine, to escape through the right hand end of the chamber 57 into the atmosphere. This rapid reduction of the pressure is necessary to prevent the pistons from stopping in the middle of their stroke, in which position they would not start.

Air intake

When the control valve plunger 56 is moved toward the right (Fig. 6) by the lever 62, as above described, the head 59 uncovers the end of the passage 66 to permit the motive fluid from the inlet 55 to enter passage 66, which leads downward and joins a horizontal passage 67 (Figs. 6 and 11) extending longitudinally of the body portion of the machine alongside the valve chamber 71. A valve bushing 70 (Fig. 10) is fixedly located in the valve chamber 71, intermediate its ends, the bushing, preferably having three peripherally extending grooves 69, 73, and 82 formed exteriorly thereof, and separate from each other. These grooves are separated from each other by the intervening unreduced portions of the valve bushing. The groove 69 forms a pressure inlet chamber, and the grooves 73 and 82 each form a combined inlet and exhaust chamber, annular in shape, each of which is connected by an annular row of ports with the hollow interior of the valve bushing. Thus annular series of ports 108 and 83 connect the annular chambers 73 and 82, respectively, with the interior chamber of the valve bushing.

The annular pressure inlet chamber 69 is preferably wider than the remaining annular chambers, and is provided with two annular rows of ports 72 and 105, respectively, located near the opposite ends of the chamber 69, and communicating with the hollow interior of the valve bushing 70.

A valve having three heads 88, 89 and 90

alined upon a single valve stem 87, is slidably mounted within the valve bushing, the intermediate head 88 being longer than the two remaining heads 89 and 90, to cover one or the other annular series of ports 72 or 105 leading from the annular pressure inlet chamber 69 to the internal chambers 84 and 710 into which the hollow interior of the valve bushing is divided by the intermediate valve head 88. A large port 68 admits pressure from the passage 67 to the annular pressure inlet chamber 69.

A combined inlet and exhaust port 75 passing through the wall of the body portion between the combined inlet and exhaust chamber 73 and the piston cylinder 74 at a point substantially midway between the ends of the cylinder 71, affords direct communication between the annular chamber 73 and the piston cylinder.

Combined inlet and exhaust ports 79 formed in the ends of the body portion A (Figs. 7 and 10) lead from the opposite ends of the piston cylinder 74 to the opposite ends of a combined inlet and exhaust passage 80 extending longitudinally through the body portion A from end to end thereof (Fig. 11), the ends of the passage 80 being closed by the end walls 45 and 46.

The passage 80 lies in substantially the same horizontal plane with the inlet passage 67, but along the opposite side of the body portion A, and is equipped with a port 81 (Fig. 11) communicating with the annular inlet and exhaust chamber 82.

The intermediate valve head 88 controls the two series of ports 72 and 105 between the annular pressure inlet chamber 69 and the internal chambers 710 and 84 within the valve bushing, and the heads 89 and 90 control communication between the internal chambers 710 and 84 and the opposite ends of the valve chamber 71, by covering or uncovering the castellated openings 85 and 107 formed in the opposite ends of the valve bushing, respectively.

A plurality of exhaust ports 86 and 109 lead from opposite ends of the valve chamber 71, the large number of small ports shown being for the purpose of muffling the noise of the exhaust.

Cylinder and pistons

As stated in the general description, the machine has a single cylinder 74 in which operate two driving pistons 76 (Fig. 10) arranged in tandem in the cylinder. These pistons are of the double head variety and each head is grooved to accommodate a ring 77 of conventional design held against peripheral rotation by a pin 78 which projects into a slot in the ring. The pistons are adapted to reciprocate in opposite directions towards and from each other in the cylinder due to alternating periods of pressure and exhaustion between them and at their outer ends.

As shown in Fig. 10, the pistons are in their inner positions, and the slide valve is positioned to admit the pressure between the pistons 76 in order to force them to their outer positions at the ends of the cylinder 74.

Valve operating mechanism

The valve heads 88, 89 and 90 control the opening and closing of the intake and exhaust ports. The central head 88 of the three controls the intake of fluid to both the center and the ends of cylinder 74, the right hand head 89 controls the exhaustion of fluid from the ends of the cylinder 74, and the left-hand head 90 controls the exhaustion of fluid from between the pistons 76. The stem 87 of the valve has an extension 91 apertured to surround a ball 92 at a point about midway of the length of a lever 93. At its lower end this lever passes through an opening in the wall of the chamber 71, and carries a ball 94 which rests in a seat formed in a cap 95 screwed to the bottom of the main body portion A. The cap 95 acts as a fulcrum for the lever 93. At its upper end, the lever 93 passes through an elongated opening in the wall between the valve chamber 71 and the piston cylinder 74, and carries a head 101 cupped to surround a ball 102 formed on the lower end of a screw 103 which extends through the center of one of the pistons 76 and whose function will be hereinafter described. A spring 104 located in the bottom of the seat in the cap 95 tends to keep the lever 93 engaged with the ball 102 on the piston.

It can be seen, therefore, that through the above described connections, the lever 93 will be rocked backward and forward with and by the piston 76 to which it is connected and as the valve stem 87 is connected to the lever 93 by a universal joint, it will be reciprocated also for the purpose of opening and closing the valve at the correct time.

The following description of the operation assumes that at the time when the power was previously shut off by the manually-controlled valve 56, 58, 59, (Fig. 6) the parts came to rest in the positions shown in Figs. 10 and 11.

When the operator is ready to use the machine, he places his hand on the formed top plate, his fingers falling naturally into the proper positions with the horn 40 in the space between the thumb and forefinger, the forefinger lying in the curved finger piece 41 on the control lever 62.

Then by simply gripping the machine in the ordinary manner to lift it onto the work, the tension thus exerted rocks the control lever 62, the free end of which presses against the projecting end of the plunger 56 to slide the control valve to the right (Fig. 6) against the tension of the restoring spring 60, until

the head 59 uncovers the adjacent end of the passage 66, thereby permitting the pressure from the inlet 55 to enter the passage 66.

The passage 66 conducts the pressure to passage 67 whence it is led through port 68 (Fig. 11) to the annular pressure inlet chamber 69.

The intermediate valve head 88 blocks the annular series of ports 105 leaving the annular series of ports 72 uncovered. Hence the pressure passes through the ports 72 into the internal chamber 710 formed in the valve bushing 70 between the intermediate head 88 and the end head 90. The head 90 covers the castellations 107 in the left-hand end (Fig. 11) of the valve bushing 70, so that the pressure can only escape from the internal chamber 710 through the annular row of ports 108 into the annular combined inlet and exhaust chamber 73 (now functioning as an inlet chamber) (Figs. 11 and 10) and thence, through the large port 75 to the space between the independent pistons 76, in the cylinder 74, where it operates to drive the pistons in opposite directions towards the opposite ends of the cylinder 74.

The fluid from the exhaust ends of the pistons 76, escapes through the exhaust ports 79 (Figs. 10 and 7) at the opposite ends of the cylinder, to the longitudinal passage 80 (Fig. 11) and thence, through the large port 81 into the annular combined inlet and exhaust chamber 82 (now functioning as an exhaust chamber) of the valve bushing, and through the annular row of ports 83 to the internal chamber 84 formed between the heads 88 and 89 of the slide valve.

The head 89 has uncovered the castellated ports 85 in the right-hand end (Fig. 11) of the valve bushing, so that the exhaust escapes from the internal chamber 84 through the ports 85 into the right-hand end (Fig. 11) of the valve chamber 71 and thence, through the muffling ports 86. As these muffling ports 86, as well as muffling ports 109 hereinafter referred to, are formed on both sides of the valve chamber 71, the exhaust passes therethrough into the space between the body portion A of the machine, and the casing plates 50 on both sides of the machine, and thence through the slotted openings 52 in the filler bars 51 down towards the work.

By directing the exhaust downwardly in this manner, the dust and dirt incident to the operation of the machine is prevented, in great measure, from entering the machine and clogging or injuring the parts.

Particularly is this desirable when working with pumice or other fine abradant material, which is dispersed by the operation of the machine on the work and if allowed to enter the machine, and especially the valve and piston chambers, would quickly cause undesirable wear of the parts and great damage to the machine.

Reverse movement of pistons

The description of the operation thus far has included only the movement of the pistons 76 from their positions, as shown in Fig. 10, to their outer positions. Shortly before they reach these outer positions, the slide valve, which moves toward the left due to its connections 93 with one of the pistons, slides the intermediate head 88 over the inlet ports 72, and thereby cuts off the supply of pressure from the annular pressure inlet chamber 69 through ports 72, internal chamber 710, ports 108, annular inlet and exhaust chamber 73 to the port 75 between the pistons and also shifts the right-hand head 89 to cover the castellated exhaust ports 85 in the valve bushing 70, leading from the internal chamber 84 to the adjacent end of the valve chamber 71; and simultaneously shifts the opposite head 90 to uncover the castellated exhaust ports 107 leading from the internal chamber 710 to the valve chamber, thereby preventing the exhaust through castellated ports 85, and permitting exhaust through ports 107. Almost at the same time the intermediate head 88 uncovers the annular row of ports 105 leading from the annular pressure inlet chamber 69 to the internal chamber 84 and the pressure is thereby permitted to pass from this chamber, through the ports 83 into the annular inlet and exhaust chamber 82, (now functioning as an inlet chamber) then through port 81 (Fig. 11), air passages 80 and ports 79 to both ends of the piston cylinder 74 to drive the pistons 76 toward the center.

This permits the exhaust pressure which is between the pistons 76 to be expelled through the central port 75, annular inlet and exhaust chamber 73 (now functioning as an exhaust chamber), ports 108, internal chamber 710 and the openings 107 in the castellated end of valve bushing 70, to the valve chamber 71 whence it exhausts through the multiple exhaust openings 109 in the body portion A of the machine. Thus the cycle of operation of the pistons 76 is completed and they are returned to the positions in which they are shown in Fig. 10.

Rubbing pad carriers

The pistons 76 as they move towards and from each other, operate to rapidly reciprocate rubbing members or shoes over the material under treatment.

There are two rubbing pads or shoes 110 which are made of felt or any suitable material. They are conveniently attached to the flat soles of metal shoes 111 by sharply pointed lugs 112 (Fig. 4) which project from said shoes. This method of mounting the pads greatly facilitates their replacement when this becomes necessary.

These pads and shoes are reciprocated by

the pistons 76 and are directly connected thereto by means of inverted U-shaped members 114, (Figs. 2, 4, 7, 8, 9, 10 and 11) each comprising a pair of legs connected at their upper ends by a flat web. At their lower ends these legs embrace the side edges of and are screwed to the pad-carrying shoes 111. Extending downwardly from the connecting webs of each of the U-shaped members are two spaced lugs 115 and 116 (Figs. 2, 8 and 10) which are adapted to fit into vertical channels 117 formed on each side of the center of the pistons 76, between the heads thereof (Fig. 3). The screw 103 and a similar screw 118 (Fig. 10) pass through countersunk holes 119 in the connecting webs to secure the members 114 rigidly with the pistons.

To permit connection of the spaced lugs 115, 116 with their respective pistons 76, the lugs depend through elongated openings 741 (Figs. 8 and 10) extending longitudinally through the upper wall of the body portion A into the upper side of the piston cylinder, such openings lying between the heads of each piston and being of less length than the overall length of the pistons so as to remain covered thereby at all times.

The lug and channel connection between the connecting webs 114 and pistons 76 permits the connections 114 to have vertical movement relatively to the pistons, so as to relieve the pistons of the thrust caused by the weight of the machine and such pressure as may be applied by the operator in using the machine, which thrust is transmitted through the shoes to the connecting members.

The under faces of the flat connecting webs between the legs supporting the shoes 111, extend over the flat upper face 120 of the body portion A, and slide horizontally between the top surface 120 of the main body portion and a replaceable bearing plate 121 (Figs. 4 and 5) which is supported on four small spacing blocks 122, one at each corner of the top face 120 of the main body portion. This bearing plate 121 is held in place by four screws 49 which extend through the spacing blocks 122 into the body portion, as shown in Fig. 7, and also serve to secure the top plate 48 in place. The bearing plate when worn, may be replaced by a new plate without necessitating replacement of the body portion A, or the top plate 48.

The function of the bearing plate 121 is to form a thrust surface with which the upper faces of the horizontal portions of the U-shaped members 114 contact to thereby lessen the wear on the upper half of the piston cylinder 74 which would otherwise occur if the pistons 76 had to take the *upward* pressure created when the operator presses down on the device.

By mounting the rubbing pads or feet 111 in such relation to the pistons 76 to which they are respectively connected that the centre of the foot lies in the same perpendicular line with a point midway between the ends of its piston, vibration of the parts is reduced as well as the tendency otherwise present, to cock or tilt the piston.

Synchronizing mechanism

It is essential to the smooth operation of the device that the pistons be connected for synchronous operation. This is accomplished by the following means. The adjacent edges of the horizontal webs of each of the U-shaped members 114 is complementarily stepped (Fig. 2) and has rigidly fastened to its farthest advanced step, a guide lug 124 from which projects a stud 125 (Figs. 2 and 4). These studs pass through guide slots 126 (Fig. 5), in the bearing plate 121, which slots embrace the guide lugs 124 to hold the connecting members 114 to a rectilinear movement. The upper ends of the studs 125 have loosely mounted thereon slides 127 (Figs. 4 and 9) which rest on the bearing plate 121. These slides 127 are embraced by slots 128 cut in the opposite ends of a rocker 129 which has a centrally located hub 130 (Fig. 10) projecting downwardly through a hole 131 in the stationary bearing plate 121, the lower end of the hub 130 passing between the stepped edges of the connecting members 114 and resting on the top face 120 of the main body portion of the machine. Projecting downwardly inside of the hub 130 is a pivot pin 132 the upper end of which has a circular cap flange 133 integral therewith and fastened to the under recessed face of the top plate 49 by screws 134.

It is apparent from the above that when the pistons are reciprocated as above described, the studs 125 carried by the U-shaped connecting members 114 will cause the slides 127 to rotate the rocker 129 counter-clockwise when the pistons 76 move toward the center (Fig. 9), and clockwise when they move toward the ends. It is evident that one of the pistons 76 cannot move without the other moving to exactly the same extent due to the rocker connecting them.

Lubrication

The pistons are lubricated by means of a steam engine lubricator (not shown) which injects a small quantity of oil into the air stream at predetermined intervals, by which it is carried to the cylinder.

The top surfaces of the horizontally reciprocated U-shaped connecting members 114 are lubricated by means of oil dropping through two oil holes 135 (Figs. 5 and 10) in the bearing plate 121. The oil is distributed by oil grooves 136 in the under face of the bearing plate leading from the oil holes 135. The oil can be supplied to the oil holes 135 from reservoirs formed in the under face of

the top plate 48 to which access may be had through apertures closed by screw plugs 137 in the top plate 48.

The synchronizing rocker 129 is lubricated by an oil cup 138 (Fig. 10) cut in the pivot pin 132, from which a channel 139 leads to the bearing surface.

While the form of mechanism herein shown and described is admirably adapted to fulfill the objects primarily stated, it is to be understood that it is not intended to confine the invention to the one form or embodiment herein disclosed, for it is susceptible of embodiment in various forms all coming within the scope of the claims which follow.

What is claimed is:

1. In a fluid pressure motor, the combination of a cylinder, a pair of oppositely acting pistons therein, a member driven by each of said pistons and attached thereto midway of its length, a stud carried by each of said members, a pivoted rocker having slots formed therein, and slides surrounding said studs and adapted to shift in the said slots of said rocker to co-operate therewith to enforce a simultaneous and co-extensive movement of said pistons.

2. In a fluid pressure motor, the combination of a cylinder, two pistons operating in the cylinder, and power transmitting members for said pistons extending parallelly therefrom, synchronizing means comprising an element pivoted at a point intermediate of said members and provided with radially extending slots, and slides carried by said members operating in said slots.

3. In a fluid pressure motor, a piston, a power transmitting member, a valve operating means, means for securing said power transmitting member rigidly to said piston, and means on said securing means connected with said valve operating means to actuate the latter.

4. In a fluid pressure motor, a piston, a power transmitting member extending laterally from one side of said piston, a valve located on the other side of said piston, and a bolt to rigidly connect said piston and power transmitting member, and extending through said member and piston and projecting beyond the side of said piston to operate said valve.

5. In a fluid pressure motor, the combination with a body portion having a cylinder formed therein; of a piston in the cylinder; the piston having channels extending transversely thereof intermediate its ends; a power-transmitting member; connecting means between the power-transmitting member and the piston, such connecting means loosely fitting in the channels to prevent relative movement between the connecting means and piston axially of the piston, while permitting relative movement between the connecting means and the piston in a direction at right angles vertically to the longitudinal axis of the piston to relieve the piston of the pressure applied to the transmitting member; and a stationary bearing plate over the power-transmitting member to afford a backing for the transmitting member.

6. In a fluid pressure motor, the combination with a body portion having a cylinder formed therein; of a piston in the cylinder, comprising two heads connected by a stem, the stem provided with vertically extending channels on its opposite sides; a power-transmitting member; spaced attaching lugs depending from the lower face of the power-transmitting member and loosely fitting in the respective channels, to permit relative movement between the piston and power-transmitting member; and a removable bearing plate against the lower face of which the upper face of the power-transmitting member bears, to limit such relative movement.

7. In a fluid pressure motor, the combination with a body portion having a single cylinder formed therein; of two double-headed pistons operable in opposite directions in the single cylinder; separate power-transmitting means connected directly with the respective pistons, and arranged side by side, the power-transmitting means extending at right angles to the direction of travel of the pistons; and synchronizing means between the two pistons, including a rocker pivotally mounted intermediate its ends and having slots formed in its oppositely extending arms; connecting means carried by the respective power-transmitting members, and entered in the slots in the rocker, to enable the piston-driven power-transmitting members to oscillate the rocker; and slides pivotally mounted on the connecting means and adapted to traverse the slots in the rocker.

8. In a fluid pressure motor, the combination with a body portion having a cylinder, a valve chamber, and a duct formed therein; and pistons operating in the cylinder; of a valve bushing in the valve chamber, having an annular pressure inlet chamber formed exteriorly thereof, and an annular combined inlet and exhaust chamber located on each side of the pressure inlet chamber, one of the annular combined inlet and exhaust chambers having a port communicating with the cylinder at a point between the pistons, the other of said annular combined inlet and exhaust chambers having a port communicating with the duct; the piston cylinder having ports at its opposite ends communicating with the duct; the valve chamber having exhaust ports leading therefrom; the valve bushing having ports affording communication between the several exterior annular chambers and the interior of the bushing; a valve slidable within the bushing and including an intermediate head and exhaust heads laterally spaced therefrom to divide the valve bushing into

two internal chambers; the intermediate head adapted to control the admission of pressure inlet from the annular pressure chamber alternately to the internal chambers of the valve bushing, the exhaust heads adapted to control the exhaust ports from the bushing to the valve chamber; and means operated by one of the pistons to operate the valve.

9. In a fluid pressure motor, the combination of a body portion having a cylinder, a valve chamber, and a combined inlet and exhaust duct formed therethrough from end to end, parallel with each other; end plates secured to the ends of the body portion and closing the opposite ends of the cylinder, the valve chamber, and the duct, and having ports formed on the inner faces thereof to connect the ends of the cylinder with the ends of the duct; oppositely traveling pistons operating in the cylinder; a valve bushing located in the valve chamber and having an annular pressure inlet chamber formed exteriorly around the valve bushing, and an annular inlet and exhaust chamber formed exteriorly around the valve bushing on each side of the annular pressure inlet chamber; the valve bushing having ports to afford communication between the several exterior annular chambers and the interior of the bushing, and also having exhaust ports leading from the interior of the bushing to the valve chamber; the body portion having a port to afford communication between the piston cylinder at a point between the pistons, and one of the laterally located annular chambers, and a port to afford communication between the inlet and exhaust duct and the other of the laterally located annular chambers; a valve slidable in the bushing and including a head to control the admission of pressure inlet from the annular pressure chamber to the interior of the valve bushing when the valve is at either end of its limit of travel, and heads to control the exhaust ports from the valve bushing to the valve chamber, the valve chamber having exhaust ports leading therefrom; and means to connect the valve with one of the pistons to operate the valve.

10. In a fluid pressure motor, the combination of a body portion having a single piston cylinder and a valve chamber formed therein, the piston cylinder and valve chamber lying parallel with each other; a pair of pistons adapted to travel towards and from each other in the cylinder; a valve bushing in the valve chamber having an annular pressure inlet chamber formed exteriorly of the bushing intermediate its ends, and two annular chambers formed exteriorly of the bushing, and located one on each side of the annular pressure inlet chamber; the body portion having a port located intermediate the ends of the piston chamber to connect the latter with the annular chamber on one side of the annular pressure inlet chamber; a passageway extending parallel with the cylinder and valve chamber and having ports communicating with the ends of the cylinder and a port communicating with the annular chamber on the opposite side of the annular pressure inlet chamber; the valve bushing having ports to afford communication between the several exterior annular chambers and the hollow interior of the valve bushing, and between the interior of the valve bushing and the opposite ends of the valve chamber; the wall of the valve chamber having exhaust ports adjacent its opposite ends; means to admit pressure to the annular pressure inlet chamber; a valve slidable within the valve bushing, including a pressure inlet head located intermediate its length and exhaust controlling heads, one on each side of, and spaced apart from, the intermediate head, to alternately cover and uncover the exhaust ports leading from the valve bushing; the intermediate valve head adapted to control the admission of pressure from the annular pressure inlet chamber to either lateral annular chamber, as well as to control the passage of the exhaust from in front of the ends of the oppositely traveling pistons, to either lateral annular chamber alternately with the admission of pressure thereto; and a connection between the valve and one of the pistons to shift the valve back and forth, and reverse the admission of pressure and exhaust of fluid alternately from end to end of the pistons.

In testimony whereof I affix my signature.

HOWARD B. SCOTT.