(12) PATENT ABRIDGMENT (11) Document No. AU-B-25733/88
(19) AUSTRALIAN PATENT OFFICE (10) Acceptance No. 622138

(54) Title
AN AMPHIBIOUS VEHICLE

International Patent Classification(s)
(51)[4] **B60F 003/00**

(21) Application No. : **25733/88** (22) Application Date : **21.11.88**

(30) Priority Data

(31) Number	(32) Date	(33) Country
8703322	**20.11.87**	**ES SPAIN**

(43) Publication Date : **25.05.89**

(44) Publication Date of Accepted Application : **02.04.92**

(71) Applicant(s)
FRANCISCO JOSE LOPEZ-IBOR ALINO

(72) Inventor(s)
FRANCISCO JOSE LOPEZ-IBOR ALINO

(74) Attorney or Agent
WATERMARK PATENT & TRADEMARK ATTORNEYS , Locked Bag 5, HAWTHORN VIC 3122

(56) Prior Art Documents
US 3127863
US 3038431
US 2720367

(57) Claim

1. A two-level sea-land creeping vehicle essentially characterised by comprising three main parts: the front part or bow portion (A), the main compartment (B) and the rear part (C), of such a configuration that the front part or bow portion is movable independently while being connected to the other two, and they are fixed with respect to each other, forming a uniform whole; the front part or bow portion being in the shape of a frustoconical wedge with a flat base where it is related to the compartment (B), with rounded edges, providing an aerodynamic shape, said edges being covered by a peripheral buffer (1) formed by a profile of a deformable element which recovers its shape each time after an impact and which therefore provides for appreciable absorption of the kinetic energy of the impact, said buffer extending around the vehicle over the whole of its outside periphery which is the most dangerous in the event of a collision and where the major part of damage can occur if a collision takes place; and said front part comprising in its upper front part a ring (2) which represents a fixed point for securing, salvage, mooring or any other action which requires the use of a fixed solid point, passages (3) passing through said bow over the entire length thereof, the passage (3) being of different diameters for performing a

../2

stabilisation function when the vehicle moves in the water, and providing a lightness function when the vehicle is creeping on land, the size thereof also being linked to the weight/buoyancy reserve relationship which is required in dependence on the density of the material used for the production thereof; and disposed in its lower rear part a roller (4) referred to as the front roller which is a light, hollow, cylindrical roller divided into three parts with a common shaft (7), said shaft being connected to fixed mountings (5) on the bow portion in such a form that said mountings are connected to the roller, holding it directly at its shaft in the gaps between the three parts formed by the roller, and where there are cap portions (6) to permit the roller to rotate freely; the bow makes it possible to transmit to the bow portion by means of the ball joint and the transmission bar all the movements necessary for handling the vehicle, as may be all the positions that the rounded ball joint can assume and that the small distance between the bow portion and the main compartment (8) permits, said bow portion also comprising a radial light projector (10) on its upper front part.

P/00/011 28/5/91
Regulation 3.2(2)

AUSTRALIA

Patents Act 1990

622138

ORIGINAL
COMPLETE SPECIFICATION
STANDARD PATENT

Application Number: 25733/88
Lodged: 21.11.1988

Invention Title: **AN AMPHIBIOUS VEHICLE**

The following statement is a full description of this invention, including the best method of performing it known to :-

AUSTRALIAN PATENT OFFICE

AN AMPHIBIOUS VEHICLE

The present invention relates to an amphibious vehicle particularly a two level sea/land creeper vehicle.

The invention is disclosed in Spanish Patent Application No. 87 03322 filed 20th November 1987 hereby incorporated herein by cross-reference entitled "Two level Sea-Land Creeping Vehicle".

The present invention includes a two-level sea-land creeping vehicle formed by three main parts: a frustoconical bow portion which is movable independently but connected to the central part or compartment in the form of a drop of water, which is flat in the lower part and which is fixed with respect to the rear part which comprises the drive and steering assembly, as well as the breathing and safety zone.

The vehicle is displaced on land by means of two rollers disposed in the lower region and by the drive of the motor, and it is likewise displaced on the surface of water due to its buoyancy and it is also displaced in a condition of dynamic immersion by the drive of the motor linked to positioning of the bow portion and hydroplanes; the air required is picked up from the surface by means of an appropriate telescopic arrangement and it has the particularity of not being hermetically sealed in the immersed condition. It is totally safe since it rises automatically to the surface when the motor stops.

The following are distinguished as characteristic elements of this part of the vehicle with reference to figures 1 to 13 of the drawings:

1. Peripheral buffer. The peripheral buffer is common to the whole of the vehicle and is formed by a profile of a deformable element of rubber, or like type which covers all the major periphery thereof. The buffer recovers its natural shape each time after a possible impact and therefore provides for appreciable absorption of the effect of the impact. The buffer extends around the vehicle, being disposed at its most outward periphery which is where there is the greatest risk of collision and where the major part of damage can occur if a collision takes place.

AUSTRALIAN 30 PATENT OFFICE

2. A ring for salvage, towing, mooring, securing. lifting, etc. The ring is an annular element which is firmly fixed to the upper front part, of such shape that it provides the appropriate strong reference location for each of the above-indicated functions.

3. Stabilising ducts or passages. The ducts are formed by cylindrical bores provided under the front part and which pass entirely therethrough, performing on land the function of lightening the weight of the bow portion and in the water serving to stablise the assembly by virtue of causing water to flow therethrough as well as for imparting handiability thereto, in accordance with the laws relating to the flow of fluids through ducts.

4. Front roller. The front roller which is disposed in the lower rear part of the front part or bow portion is light and cylindrical and is divided into three sections so that the mountings 5 can be fixed between them and they are joined together by means of the common shaft 7 thereof. The roller is the means for supporting the vehicle on land and underwater surfaces, with the assistance of another similar roller mounted in the rear part.

5. Mountings for the front roller as a small damping element, for fixing the roller to the lower rear part of the front part or bow portion, and they are connected by their lower portion to the shaft 7 of the roller.

6. Rotary cap portions which are fixed to the mountings and within which the shaft 7 of the roller rotates.

7. Shaft of the roller which is common to the three parts thereof and providing a strong location for fixing of the outer casing of the roller, as well as the mountings 5, by means of the caps 6.

8. Transmission bar formed by a profile member fixed in the rear part of the bow portion which makes it rigid and which also, in combination with the steering ball joint 9, permits it to be disposed in the appropriate position and provides for displacement thereof both in the horizontal axial plane or in the vertical axial plane.

9. Steering ball joint, a simple mechanism which permits the assembly to be disposed in any desired position within the limitations of the pivot connection (± 170° in all directions).

10. A radial light projector or lamp which is suitably shielded, for use both in and out of water.

B. Compartment. The compartment in the true sense is in the form of a drop of water which is flattened in the lower part forming an edge configuration which is slightly roundd in the rearward part, as can be seen from Figures 6 and 7. The shape is the most favourable for movement in an immersed condition and is especially provided for the assembly of breathing elements to produce the bubble effect necessary for perfect operation of the vehicle in the immersed condition. On land, in view of the low speed of movement of the vehicle, the shape of the construction is of less aerodynamic importance.

The slightly rounded shape of its lower part is due to the necessity for it to be displaced on land by means of the rollers and the enlarged configuration for the reason of providing an extensive base for supporting the vehicle when it moves on the surface of water combined with an ample reserve of buoyancy. The compartment is provided with two substantial stiffening elements. One is a semicylinder which is disposed in the lower part of the compartment with the flat part being combined with the flat body of the vehicle and the cylindrical part acting as a tunnel dividing the compartment into two parts, leaving two spaces at both sides of the tunnel which is where the seats for the crew members/occupants are disposed. The semicylinder is hermetically closed except in its final portion where the propeller and the hydroplane-rudder are disposed; all the conduits and systems for control of the vehicle are disposed in the semicylinder. The other stiffening element is an arcuate support and safety member which goes from the front part of the compartment to the rear wall which divides the compartment from the rear zone and which serves as a mounting for the doors. The compartment is also fixed with respect to the rear wall and comprises active safety elements.

The following are characteristic elements of that part:

11. Arcuate safety and support member formed by a slender narrow but strong profile member which starting from the front part of the compartment B finishes by being fixed in the rear part of the compartment 90. The doors 13 are pivoted on that member on the top thereof by means of the upper mountings 12.

12. Mounting for the doors which permits them to be pivoted upwardly, disposed on the member 11.

13. Upwardly opening doors of the gull wind type, which provide the sides of the compartment and which are not sealingly closed since, although they have a safety seal 14, upon being closed they have enlarged lateral openings 88 disposed as low as possible and, although the vehicle is immersed, due to the bubble effect and the pressure in the compartment, a small amount of water can enter, which is immediately removed by way of the corresponding drain valves 37.

14. Safety seals.

15. Anatomical handle for opening and closing doors, in the shape of a slight recess in the compartment in order not to create any break in the sheet of water when the vehicle is travelling in an immersed condition, and which is not liable to become caught up with any external element.

16. Anatomical seats which are disposed at both sides of the tunnel, of such a shape that they are enclosed between the outside walls of the compartment and the tunnel.

17. Steering wheel. Dual control which is disposed in front of each seat 16 which acts on the steering ball joint 9 producing a direct effect on the bow portion A.

18. Lever for moving the bow portion in the up-down direction. There is a lever member at each side of the tunnel in front of the seats 16.

19. A lever for positioning the rear hydroplanes 58. It provides dual control, one at each side of the tunnel 21 and in front of the seats 16 for easier operation.

20. A lever for positioning and operating the hydroplane-rudder which is disposed in line with the propeller. The lever 20 is a dual control arrangement, one on each side of the tunnel 21 and in front of the seats 16 for easier operation.

21. Air-tight semicylindrical tunnel. The semicylindrical tunnel, the flat part of which is disposed on the floor of the vehicle with the semicircular part extending upwardly to divide the compartment into two parts, being sealed from the front part where it begins to the propeller at the opposite rearward end. Disposed within the tunnel are all the transmission means, conduit means, sensor elements etc. of the assembly, in brief all the delicate elements which could suffer damage in contact with extranl agents. At the same time it also acts as a structural element to increase the rigidity of the assembly. The various control and actuating means of the creeping element 23, 24, 25, 26, 27 and 28 can be seen on the tunnel and the whole assembly of transmission means and conduit means 29 thereof can be seen in its interior.

22. Video monitor for selecting the different views of the cameras 60 and 80 which are disposed in the rearward part and the breathing asembly respectively.

23. Commands and controls for the motor.

24. Commands and controls for electricity and lights.

25. Commands and controls for navigation purposes, that is to say speed, depth, inclination and bearing.

26. Safety controls and commands.

27. Controls and indicators for physiological monitoring of the medium and the occupants.

28. Directable radial light projector or lamp which is disposed preferably in the lower portion of the front part.

29. Assembly of transmission means and conduit means from and to the various control members.

30. Safety plate consisting of a strong rectangular plate with bevelled corners, disposed in the lower portion of the front part B and connected thereto by means of the springs 31 and the tensioning means 32.

31. Springs which connect the safety plate 30 and the lower portion of the front part 13 and which consist of large strong spring members which are compressed by means of the tensioning means 32 and which, when they are allowed to act, project the safety plate 30 in opposite relationship to the floor of the vehicle, with a great deal of violence, thus, by an action-reaction effect, flinging the vehicle upwardly and freeing it from a possible obstruction, which operation can be performed as many times as may be necessary.

32. Hydraulic tensioning means for the springs, which are mounted on the lower portion of the front part and which compress the springs 31, the operator being able to free the above-mentioned springs from the interior as well as providing for compression thereof whenever necessary.

33. Safety plate used with the springs at maximum elongation thereof.

34. Springs 31 in their condition of maximum elongation safety buoyance zone disposed over the entire length of the front part B.

36. Main fuel tanks disposed on both sides of the tunnel 21 and protected externally by the safety buoyancy zone 35.

37. Drain valves for the discharge of water from the compartment. They are simple valves which operate by a venturi effect, due to the depression created by the sheet of water as it passes over the valve. There are at least two thereof, disposed in the lowest part of the compartment, one on each side of the tunnel 21.

C. Rear part. The rear part is fixed with respect to the compartment, forming an assembly therewtih and being separated therefrom by a strong wall. The rear part comprises three zones which are differentiated from each other, as follows:

f. Lower zone which contains the motor compartment, within the tunnel for stiffening the vehicle, combined with the turbo-compressor and the hydraulic generating system.

Disposed at the output of the motor is the propeller whose drive flow acts directly on a hydroplane-rudder with a steering effect. Mounted beneath that lower portion is the second roller, referred to as the rear roller, which is identical in its characteristics to the front roller and which is mounted in the same way by means of the mounting which goes from the shaft of the roller to the lower portion of the rear part. The zone f is likewise provided with fuel tanks around the tunnel and buoyancy reserves in the enlarged part of the compartment.

The intermediate stability and control portion e which is provided with arcuate safety members which at the same time are stabilisers, disposed symmetrically at both sides of the vehicle, and which extend from the upper part and form a semicircular arc in a plane perpendicular to the axial direction of the vehicle, being mounted at the outward end of the abovementioned buoyancy reserve, and in the middle part thereof carrying a hydroplane in the form of an orientable aircraft wing which provides a stabilisation and control effect for the assembly.

The upper portion d of the rear part C, referred to as the safety and control portion, is formed by a video camera in the manner of a rear view mirror, and the breathing and safety zone which is under cover totally integrated into the general profile of the vehicle.

Once the cover is lifted, which holds the breathing valve for when the vehicle is not submerged and the whole assembly is extended, we can see that from the bottom upwardly it is formed by telescopic elements which support the safety and control tank formed by an aircraft wing-like member with stabiliser and buoyancy hydroplanes, that member comprising two additional fuel tanks and another oxygen tank and likewise comprising a receptacle from which extend other telescopic elements which support another aircraft wing-like member in which there is disposed a radial lamp, sensors for sensing ambient conditions, an additional video pick-up and an air intake in the form of a periscope which is oriented

AUSTRALIAN PATENT OFFICE

in the opposite direction to the direction of travel so that when the vehicle is travelling in an immersed condition, even if there is a slight swell and even if the member which supports it is of high buoyancy, splashes of water should not affect it.

Likewise all that assembly carries in its interior the appropriate conduit means, one being provided for carrying air directly to the turbo compressor and another for hydraulic power, transmission of signals, electrical cables, video cables etc.

The following components can be seen in the lower part f:

40. Rear roller. This of the same characteristics as the front roller.

The rear roller which is disposed in the lower portion of the rear part C is formed by a light cylinder which is divided into three section so that the mountings 42 can be fixed between them and which are joined together by means of the common shaft 41. The roller is the means for supporting the vehicle on land and on underwater surfaces, with the assistance of the corresponding front roller.

41. Shaft of the roller, which is common to the three parts thereof and being a strong location for mounting of the outside casing portion of the roller as well as the mountings 42 by means of the end caps 43.

42. Mountings for the rear roller, with a slight damping element, being those which fix the roller to the lower rear part of the vehicle.

43. Rotary end caps fixed to the mountings and within which the shaft 41 of the roller rotates.

44. Motor compartment; disposed in the rear part of the tunnel 21 which contains the motor 45, a turbo compressor 50, a hydraulic generating system 55 and multiple outlet openings.

45. Motor, housed in its compartment 44, which can be mounted in different positions depending on the weight of the propeller and the type thereof.

46. Rear output shaft of the motor which supplies power for the turbo compressor 50 and the system 55.

47. Rear output shaft of the motor which drives the propeller 48.

48. Propeller which supplies the dynamic thrust for the vehicle.

49. Hydroplane-rudder mounted in the rear part of the tunnel 21; the movable portion of the hydroplane-rudder, by means of the propeller 48, steers the vehicle.

50. A turbo compressor which is driven by means of the front shaft of the motor and which drives the air which comes from the exterior to the motor and the compartment, in order for the bubble effect to function perfectly.

51. Air outlet of the turbo compressor to the compartment.

52. Air outlet from the turbo compressor to the motor.

53. Air inlet from the exterior to the turbo compressor.

54. Non-return escape valve of the motor through which issue the gases from combustion when an internal combustion engine is used as the motor.

55. Hydraulic generating unit which supplies hydraulic power to all the system.

56. Multiple connection of the hydraulic generating unit which permits hydraulic pressure to be supplied to distant operating units.

e. Intermediate zone of the rear part which includes the arcuate safety members 57 and the stabilising hydroplanes 58.

57. Arcuate safety, reinforcing and stabilisation members which consist of two arcuate members which, starting from the upper part of the compartment, finish at the lateral edges, forming a semicircle perpendicular to the horizontal plane of the vehicle in the rear part thereof. The arcuate members comprise stabilising hydroplanes 58 in a horizontal plane parallel to that of the vehicle.

AUSTRALIAN PATENT OFFICE

58. Stabilising hydroplanes formed by a profile member in the form of an aircraft wing, supported by a shaft 88 mounted on the arcuate safety members 57, thus permitting the hydroplane to turn through 180°, as required.

88. Shaft for rotary movement of the hydroplanes.

85. Divider wall between A and B.

86. Brake for the rear roller, which is required for when the vehicle is travelling on land.

87. Lever for the brake which acts on the rear roller.

89. Outline of the doors which cannot be closed sealingly, as can be seen in this case. Even if the doors are not sealingly closed, that does not affect general operation of the vehicle.

d. Breathing and control zone. This zone is the most important of the vehicle and is made up of the following parts:

60. Rear video camera, with movement through 360°, the images thereof being transmitted directly to the monitor in the compartment.

61. Cover of the breathing and control receptacle, which is totally integrated within the structure of the vehicle.

62. Air intake valve for when the vehicle is moving on land or on the surface of water.

63. Receptacle for the safety tank which contains both the safety and control tank 67 and the signalling and air intake assembly.

64. Ball joint for directing the assembly, which permits said assembly to adopt the most favourable position, depending on the depth of immersion, speed and other conditions.

65. Telescopic elements which are progressively extending as the vehicle descends to increasing depth and which are of triangular shape or of a configuration in the form of a drop of water in order to offer the minimum resistance to movement through the water.

66. Ball joint for orientation and stabilisation of the safety and control tank.

67. Safety and control tank. This tank is formed by an open receptacle 70 which contains the remainder of the elements of the breathing and air intake assembly, being suitably closed by a cover 69, its corresponding stabiliser hydroplanes 68 and the two auxiliary fuel tanks 76 and an auxiliary oxygen tank 77.

68. Stabiliser hydroplanes for the tank 69 and which are in one piece therewith and which moreover are provided with a substantial buoyancy reserve. The aircraft wing-like configuration thereof provides that it affords minimum resistance to movement through the water.

76. Auxiliary fuel tanks for emergency situations.

77. Auxiliary oxygen tank for emergency situations.

78. Safety buoyancy zone.

68. Cover for the safety and control tank, totally integrated into same when it is closed.

70. Compartment which accommodates the signalling and air intake assembly.

71. Ball joint for orientation of the assembly, which permits the assembly to adopt the most favourable position, depending on the conditions in respect of depth and speed.

72. Telescopic elements which support the signalling and air intake assembly, which are extended as required and whose profile, being triangular or in the form of a drop of water, contribute to affording minimum resistance to movement through the water.

73. Signalling transmitter and air intake, essentially characterised by being formed by an aerodynamic profile in which all the following elements are integrated.

74. Light emitter; for illumination and signalling. it is for signalling for when the vehicle is navigating in a submerged condition to show where it is and where it is moving to; and for illumination in any necessary situation.

75. Ambient condition sensors which transmit to the compartment all necessary signals for when the vehicle is navigating underwater.

80. Video camera for transmitting to the passenger compartment the images which are shot at the surface when the vehicle is travelling underwater.

81. A safety air intake formed by a small tube in the form of a periscope with the opening thereof facing rearwardly so that splashes as the vehicle moves forward or a slight swell do not affect it, being provided with a non-return valve 82 so that if the vehicle is submerged to a greater depth than the safe depth, no water enters through the safety assembly.

82. Non-return valve disposed in the safety air intake 81.

83. Conduit carrying air directly to the turbo compressor.

84. Assembly of conduits to the compartment.

Having regard to the foregoing description it should be noted that the details involved in carrying the idea of the invention into effect as set forth hereinbefore may be varied, that is to say they may be the subject of minor alterations still based on the fundamental principles of the idea which are in substance those which are reflected in the paragraphs of the foregoing description and which are summed up in the following claims.

THE CLAIMS DEFINING THE INVENTION ARE AS FOLLOWS:

1. A two-level sea-land creeping vehicle essentially characterised by comprising three main parts: the front part or bow portion (A), the main compartment (B) and the rear part (C), of such a configuration that the front part or bow portion is movable independently while being connected to the other two, and they are fixed with respect to each other, forming a uniform whole; the front part or bow portion being in the shape of a frustoconical wedge with a flat base where it is related to the compartment (B), with rounded edges, providing an aerodynamic shape, said edges being covered by a peripheral buffer (1) formed by a profile of a deformable element which recovers its shape each time after an impact and which therefore provides for appreciable absorption of the kinetic energy of the impact, said buffer extending around the vehicle over the whole of its outside periphery which is the most dangerous in the event of a collision and where the major part of damage can occur if a collision takes place; and said front part comprising in its upper front part a ring (2) which represents a fixed point for securing, salvage, mooring or any other action which requires the use of a fixed solid point, passages (3) passing through said bow over the entire length thereof, the passage (3) being of different diameters for performing a stabilisation function when the vehicle moves in the water, and providing a lightness function when the vehicle is creeping on land, the size thereof also being linked to the weight/buoyancy reserve relationship which is required in dependence on the density of the material used for the production thereof; and disposed in its lower rear part a roller (4) referred to as the front roller which is a light, hollow, cylindrical roller divided into three parts with a common shaft (7), said shaft being connected to fixed mountings (5) on the bow portion in such a form that said mountings are connected to the roller, holding it directly

AUSTRALIAN PATENT OFFICE

at its shaft in the gaps between the three parts formed by the roller, and where there are cap portions (6) to permit the roller to rotate freely; the bow makes it possible to transmit to the bow portion by means of the ball joint and the transmission bar all the movements necessary for handling the vehicle, as may be all the positions that the rounded ball joint can assume and that the small distance between the bow portion and the main compartment (B) permits, said bow portion also comprising a radial light projector (10) on its upper front part.

2. A two-level seal-land creeeping vehicle characterised by the preceding claim and also characterised in that the compartment (B) in the true sense is formed by a surface in the form of a drop of water which is flattened in its lower part and at the rear, in such a way that the lower part is enlarged to form a concave curvature and thereby there is formed a small hydroplane which operates as an aid for stability and which is used for locating two fuel tanks (36) towards the interior and a safety buoyancy reserve (35) at its perimeter; that kind of bubble will be preferably produced of a transparent material and provided with two systems for stiffening the assembly, one formed by a semicylindrical sealed tunnel (21') whose flat part forms a part of the floor of the compartment and whose cylindrical part divides the compartment into two, which makes it specially suitable for carrying two occupants one on each side of the tunnel, since the are two spaces especially designed to position two anatomical seats (16), said tunnel being hermetically closed; and accommodating in its interior all the hydrolic assembly or manual system (29) for transmission to the remote members for controlling and managing the vehicle, and all the installations necessary for control, viewing or safety; all the commands and controls of the vehicle being disposed in the upper part of the tunnel and the installations thereof all passing through the sealed tunnel; said commands and controls are those

AUSTRALIAN PATENT OFFICE

relating to the motor (23), controls and commands for electricity (24), commands and controls for speed, depth, inclination and bearing (25), commands and controls for the consumption both of fuel and of air, physiological monitoring controls and indicators (27) including the commands for safety and control tank (61) as well as the controls and sensors for physiological monitoring (27) of the occupants (O_2, CO, temperature, pulse rates etc); a video monitor (22) being disposed on the front part of the tunnel, for giving the occupants of the vehicle the necessary information relating to the regions which cannot be reached by visual control such as the rear and in the immersed condition, the rear over an angle of more than 160°, all that relating to the first system for stiffening the compartment; the second system for stiffening the compartment being formed by an arcuate support and safety member (57) which is mounted in the front part of the tunnel (59) and extends to the rear wall of the compartment (85) which forms the separation between the compartment (B) and the rear part (C), in such a way that said arcuate member is of small width and is integrated into the structure of the compartment and supports the mountings (12) for the two symmetrical doors (13) which open upwardly in the form of gull wings and which do not hermetically close the compartment in order to give access to the interior of the compartment for the occupants thereof, said doors being closed by a simple lock system (14) integrated in an anatomical handle (15) in order not to produce turbulence when the vehicle advances in a submerged condition.

3. A two-level sea-land creeping vehicle characterised by any one of the preceding claims and also characterised in that the doors do not sealingly close the compartment in such a manner that they leave two symmetrical spaces at both sides of the fastening which extends to the base of the compartment, in such a way that when the vehicle is immersed

AUSTRALIAN PATENT OFFICE

a small amount of water passes into the compartment through said free zones but not too much due to the force of the air pressure in the compartment and its bubble effect in the upper part thereof, wherein it does not matter that water enters since the automatic action of the drain valves (37) disposed in the bottom of the compartment, which operate in accordance with a venturi effect, that is to say the depression and the effect of that depression is that the water is sucked to the exterior; which characteristic of not being sealingly closed while thus being able to submerge easily not only being what constitutes a great different in relation to a conventional submarine but that the applied notion thereof is one of the strong points of this patent of invention.

4. A two-level sea/land creeping vehicle characterised by any one of the preceding claims and also characterised in that various controls are disposed in the compartment and at a short distance from the anatomical seats (16), said controls including a steering wheel (17) which operates the turning ball joint of the bow portion (A), a lever which operates the rear hydroplane (19), another lever which operates the hydroplane/rudder (20), another lever which acts as a brake for the rear roller (87) and another lever for upward/downward movement (18) of the bow portion, the compartment also having in its lower outward part a mounting for four strong springs (31) which are held in a condition of tension by means of four hydraulic tensioning means (32) and which act by the lower part thereof on a strong rigid rectangular safety plate (3)) with rounded corners, in such a way that when the tensioning means (32) are released, the springs catapult the safety plate (30) downwardly, with a movement of an amplitude which is as great as the length of the springs, and in such a way that, on touching bottom, the plate reverses the action, throwing the vessel upwardly in such a way that, if it were slightly trapped in some

AUSTRIAN PATENT OFFICE

difficult situation it becomes perfectly free, said action being such that it can be performed as many times as may be necessary.

5. A two-level seal/land creeping vehicle characterised essentially by any one of the preceding claims and also characterised in that the rear part (C) is divided into three main portions, lower zone (f) which comprise a rear roller (40), a turbocompressor (50), a hydraulic unit (55) and the assembly of a motor (45) and a propeller (48), with the hydroplane/rudder (49); the central zone (e) for stability and control with the stabilising hydroplanes (58) and arcuate stabilising safety members (57), and the upper zone (d) with the entire breathing and safety zone and two video cameras (60) and (80); in such a fashion that the lower zone (f) carries in its lower part outside the assembly a rear roller (40) of the same characteristics as the front roller (4) and which is mounted by means of the mounting (42) which it has on the lower part of the assembly and on the shaft of the roller (41) which it carries by means of the cap portions (43); it operates like the front roller (4) and the arrangement is also provided with a simple hydraulic pulling means (86) operating by direct pressure which acts as a brake; being necessary when the vehicle is travelling on land; and continuing from inside to outside with the lower part, we finally find within the compartment formed by the final part of the stiffening tunnel (21), the hydraulic unit (55) which generates pressure for moving the different elements by means of a nozzle assembly with a plurality of outlets (56); a turbocompressor (50) with air intake (53) for the conduit (83) which comes from the outer pick-up (81); an air outlet for the compartment (51) and an air outlet for the motor (52); wherein there is then provided the motor (45) which is an internal combustion engine or an electric motor, with two shafts, one to the interior (47) for driving the turbocompressor (50) and the hydraulic unit (55) and any other element which is coupled thereto, and the

AUSTRALIAN PATENT OFFICE

other to the exterior (46) which supports the propeller (48) which drives air or water, depending on the medium in which the vehicle moves, to the hydroplane-rudder (49) for the purpose of imparting manoeuvrability to the assembly, since the hydroplane/rudder is disposed in a vertical position and pivotally mounted in its central part by means of a shaft and by being disposed very close to the propeller it makes it vary effective insofar as it projects air or water against the face which is presented thereto, manoeuvring it in the same direction.

6. A two-level sea-land creeping vehicle characterised essentially (e) described in the preceding claim 5 is formed by arcuate safety members which at the same time are stabilisers (57) which are disposed symmetrically at both sides of the vehicle and which, starting from the upper part and forming the semicircular arc, are anchored at the outer end of the safety buoyancy zone (35), carrying a shaft (88) mounted in its centre part, the shaft (88) being perpendicular to the theoretical axial plane of the vehicle, and the other end being mounted to the central part of the compartment, said shaft (88) comprising a hydroplane in the form of an aircraft wing profile (58), rotatable on said shaft, which permits an effect for stabilisation and control of the assembly, assisted by the bow portion (A) and the motor (45) and hydroplane-rudder (49) assembly.

7. A two-level sea-land creeping vehicle characterised essentially by any one of the preceding claims and also characterised in that the upper zone (d) of the rear part (C), referred to as a breathing and safety zone, is formed by an orientable video camera (60) which covers an angle of 360° with a short focal distance and the images of which are received at the video monitor (22) disposed in the compartment, wherein further upwardly there is disposed a cover which is totally integrated in the profile of the vehicle, which is the cover

AUSTRALIAN PATENT OFFICE

for the receptacle of the safety and breathing zone (61), which carries a valve for the intake of air (62) for when the vehicle is on the land or on the surface of the water, then when it is submerged the cover the receptacle (61) opens and the valve (62) is automatically closed and in addition there is provided a receptacle, referred to as the receptacle of the breathing and control zone (63), which contains the remainder of the elements described hereinafter as follows: triangular telescopic elements (65); with an orientation ball joint (64) within the receptacle (63), the telescopic elements being triangular in order to afford the least resistance to forward movement in the water, said elements terminating in a further fixing and orientation ball joint (66) disposed in the
which serve as stabilisers for the tank and as a buoyancy reserve, the safety tank being provided at its ends with respective auxiliary fuel tanks and between same an auxiliary air tank (68), the remaining cavity being formed by the receptacle for the signalling and air pick-up assembly (7) which is closed off by its corresponding cover (69) and when the cover is raised further telescopic elements (72) emerge, with their corresponding orientation and supporting ball joint (71) which is integrated wtihin the signal-emitting and air pick-up unit (73) which is formed by a small member in the form of an aircraft wing in which there is provided: a radial light (74) which serves for signalling, as a buoy and for illumination, sensors for sensing ambient conditions (75) which transmit to the compartment information in respect of temperatures, winds, currents and other variables; an additional video pick-up (8), an air pick-up (81) with its non-return and safety valve (82) in front of an air intake and which moreover is in the form of a periscope with its entry in the opposite direction to the direction of travel so that if the aquatic medium is not calm and there are waves, water does not pass into the safety pick-up; and another front safety light

(74), wherein there is likewise provided the various conduit means, one thereof being the direct conduit for carrying air to the turbocompressor (83) and other grouped conduit means for carrying the video signals, ambient conditions, data etc.

8. A two-level sea-land creeping vehicle characterised by any one of the preceding claims and also characterised in that it is an apparatus which as its very name indicates is capable of creeping perfectly on the land by means of its rollers as rolling elements and the motor with propeller as drive means, which is capable of navigating on the surface of the water by means of its perfect aerodynamic design and its low weight which provides that it always complies with the law that its weight is less than its displacement and which is also capable of creeping on underwater surface at low depth or navigating in an immersed condition in total safety due to the fact that, as immersion thereof is dynamic in nature and is effected by means of the hydroplanes and the motor, immediately the safety depth is exceeded, the air intake system closes and prevents air from reaching the motor so that it stops, in such a way that as soon as the motor stops, the vessel automatically rises to the surface where the constant requirements for human life are normal at sea level and the motor receives air in regular manner for combustion therein, and also essentially characterised by having a compartment which is not hermetically sealed, which makes it the only one of its kind when it is immersed, by making use of the physical effect of the bubble system.

9. A two-level seal-land creeping vehicle essentially characterised by any one of the preceding claims and also characterised in that to go from the surface of the water to the immersion system, the procedure is effected in a dynamic fashion, that is to say firstly with inclination downwardly of the front part (A) which begins to submerge with the assistance of the

AUSTRALIAN PATENT OFFICE

motor in order then to be assisted in stabilisation and control by the same front part (A) and the arcuate members (57) and the stabiliser hydroplanes (58).

10. A two-level sea-land creeping vehicle substantially as herein described with reference to the drawings.

DATED this 4th day of October 1991.

FRANCISCO JOSE LOPEZ-IBOR ALINO

WATERMARK PATENT & TRADEMARK ATTORNEYS
THE ATRIUM
290 BURWOOD ROAD
HAWTHORN, VICTORIA 3122
AUSTRALIA

LJD:KG 3(2)

AUSTRALIAN PATENT OFFICE

FIG, 1

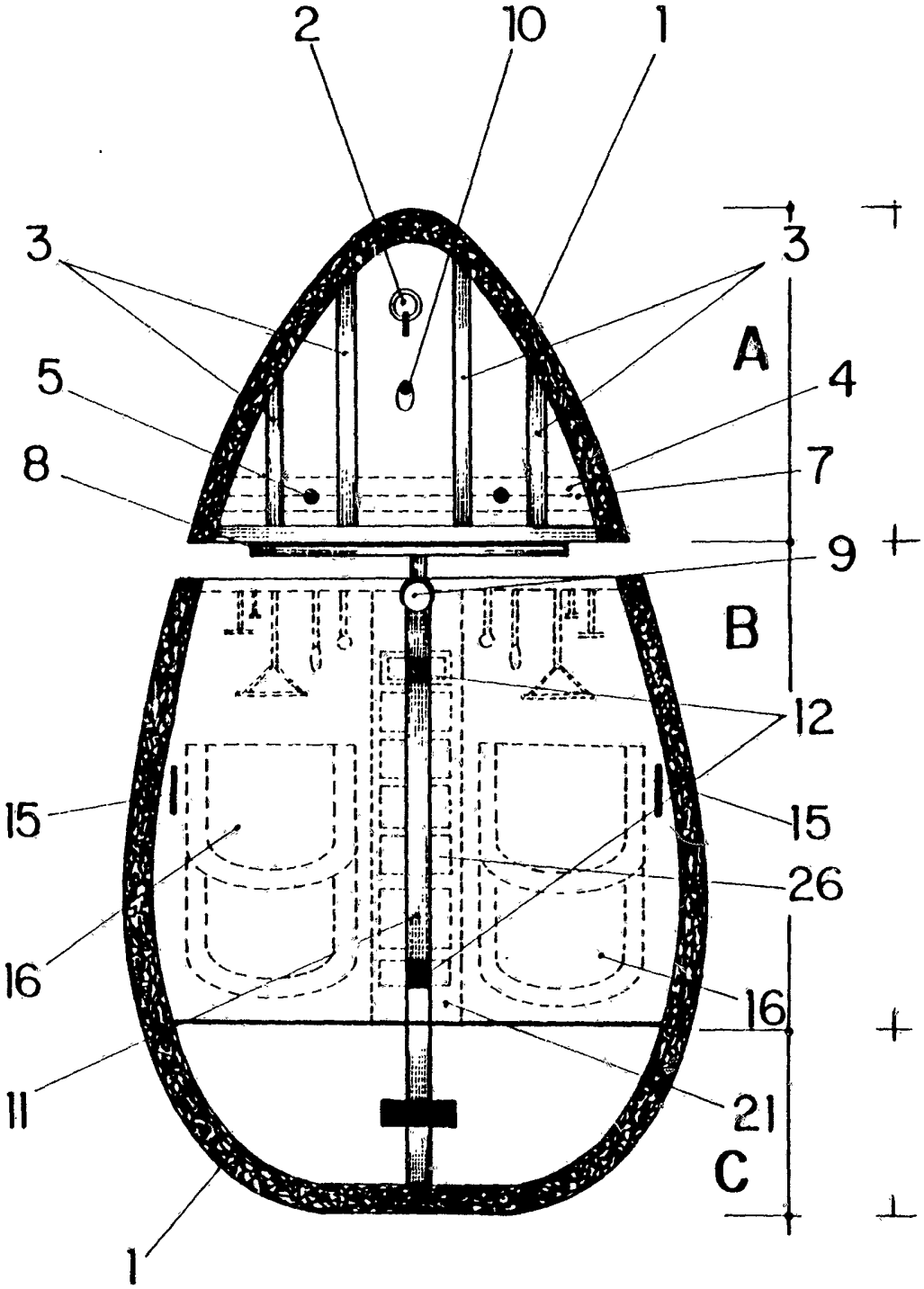

FIG 2

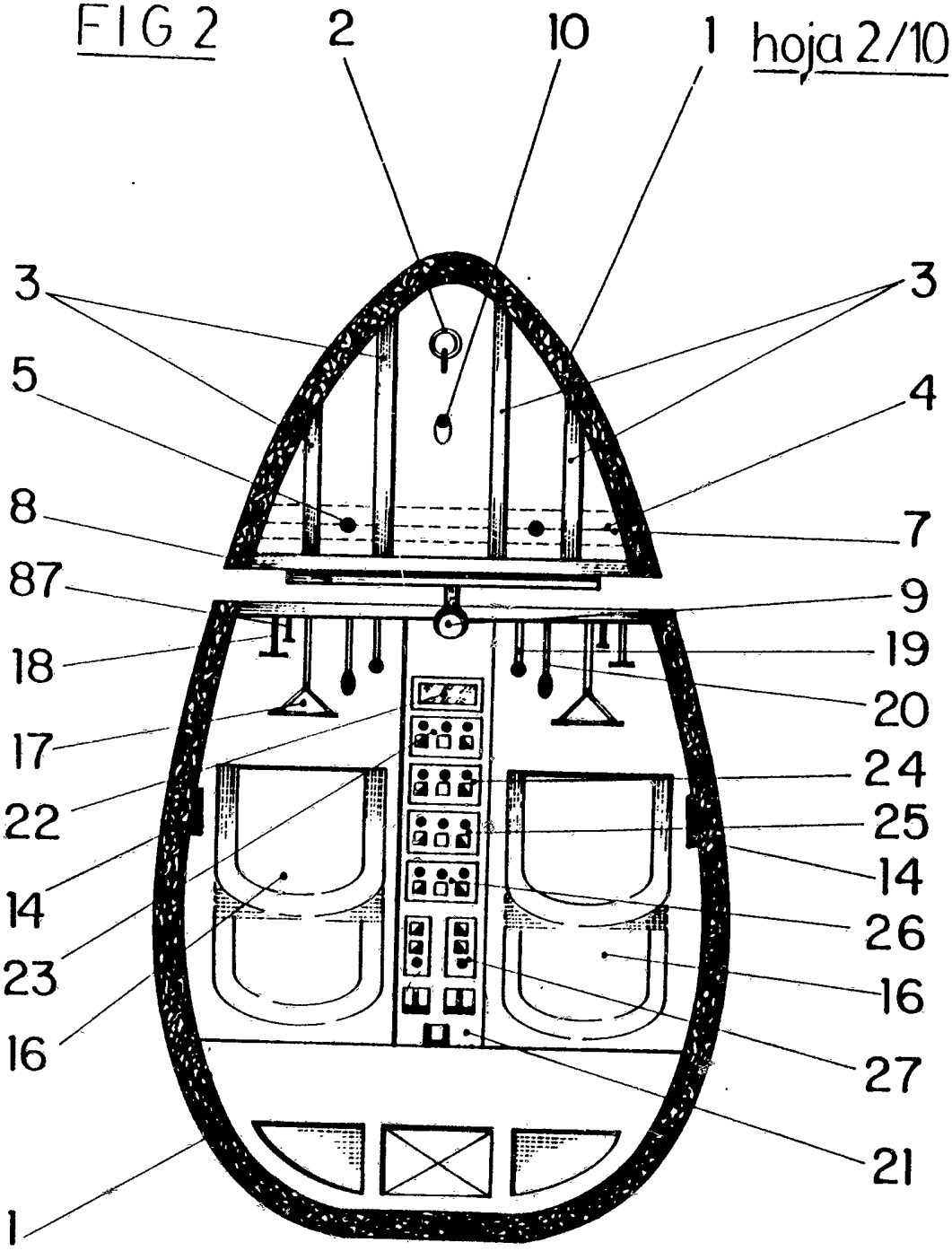

18 56

FIG.3

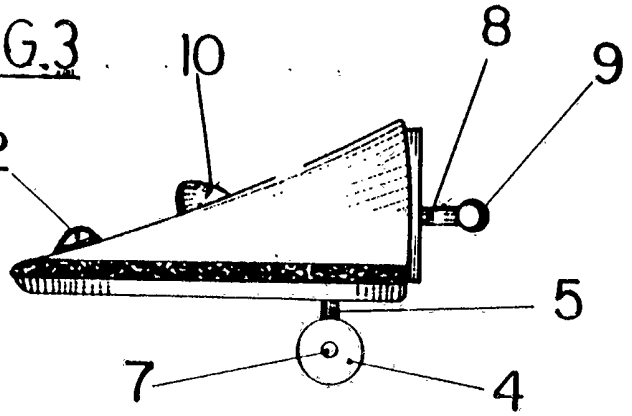

FIG.4

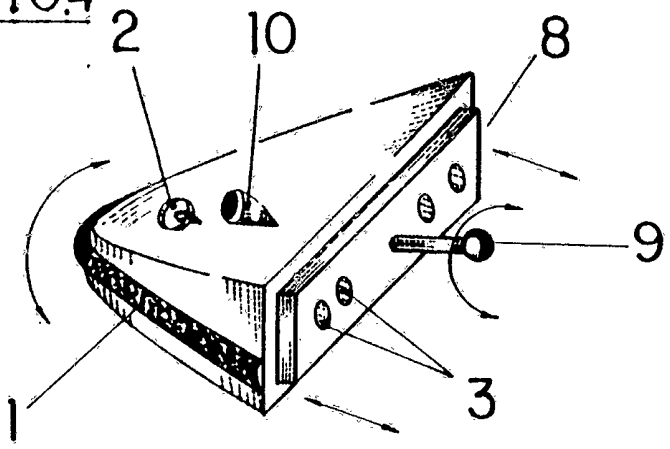

FIG.5

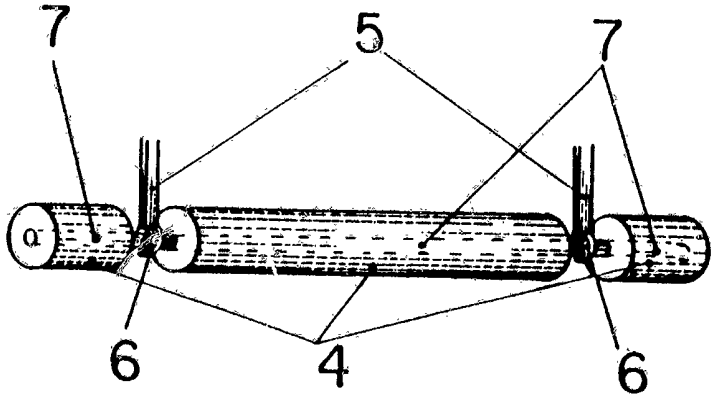

FIG.6

hoja 4/10

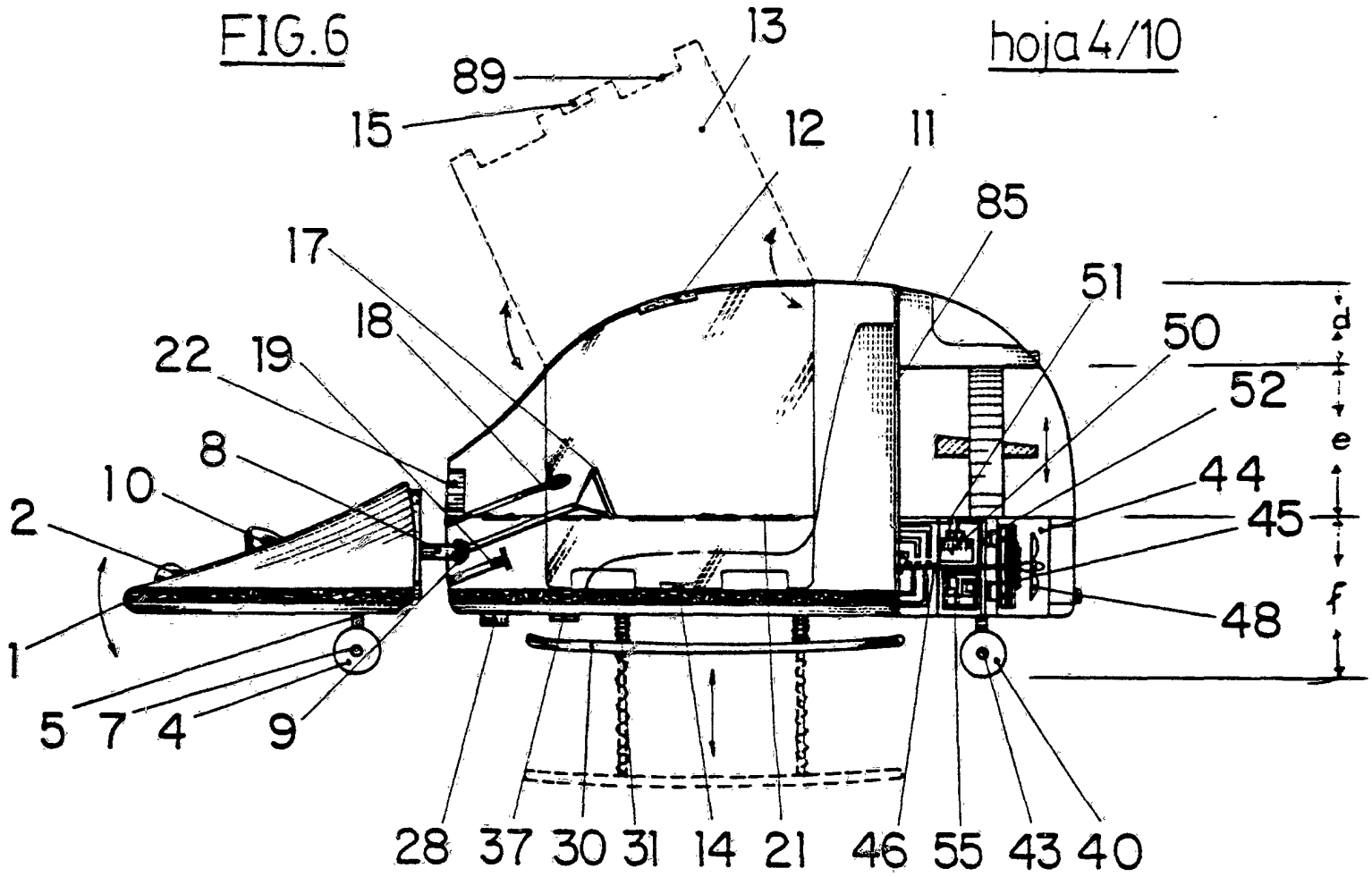

25533/88

FIG. 7

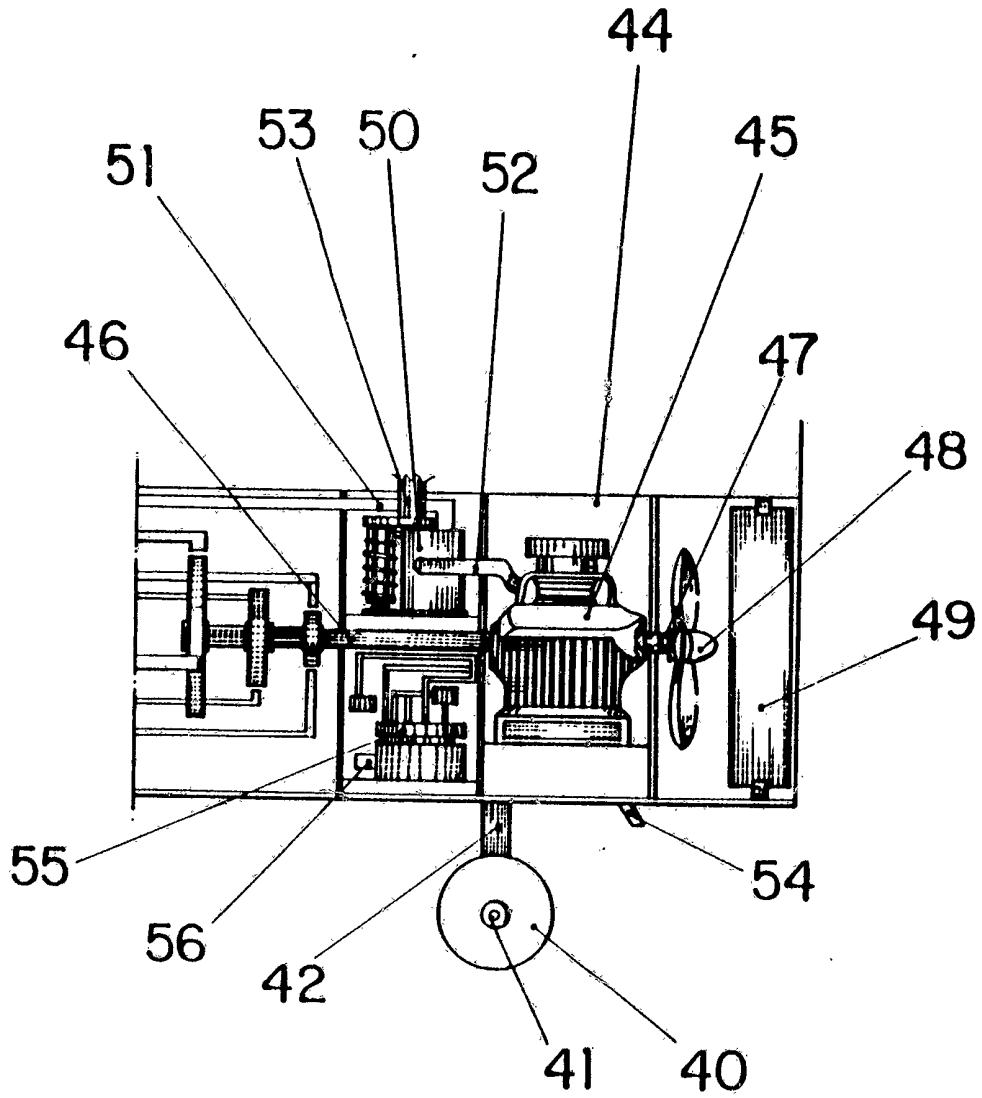

FIG.8

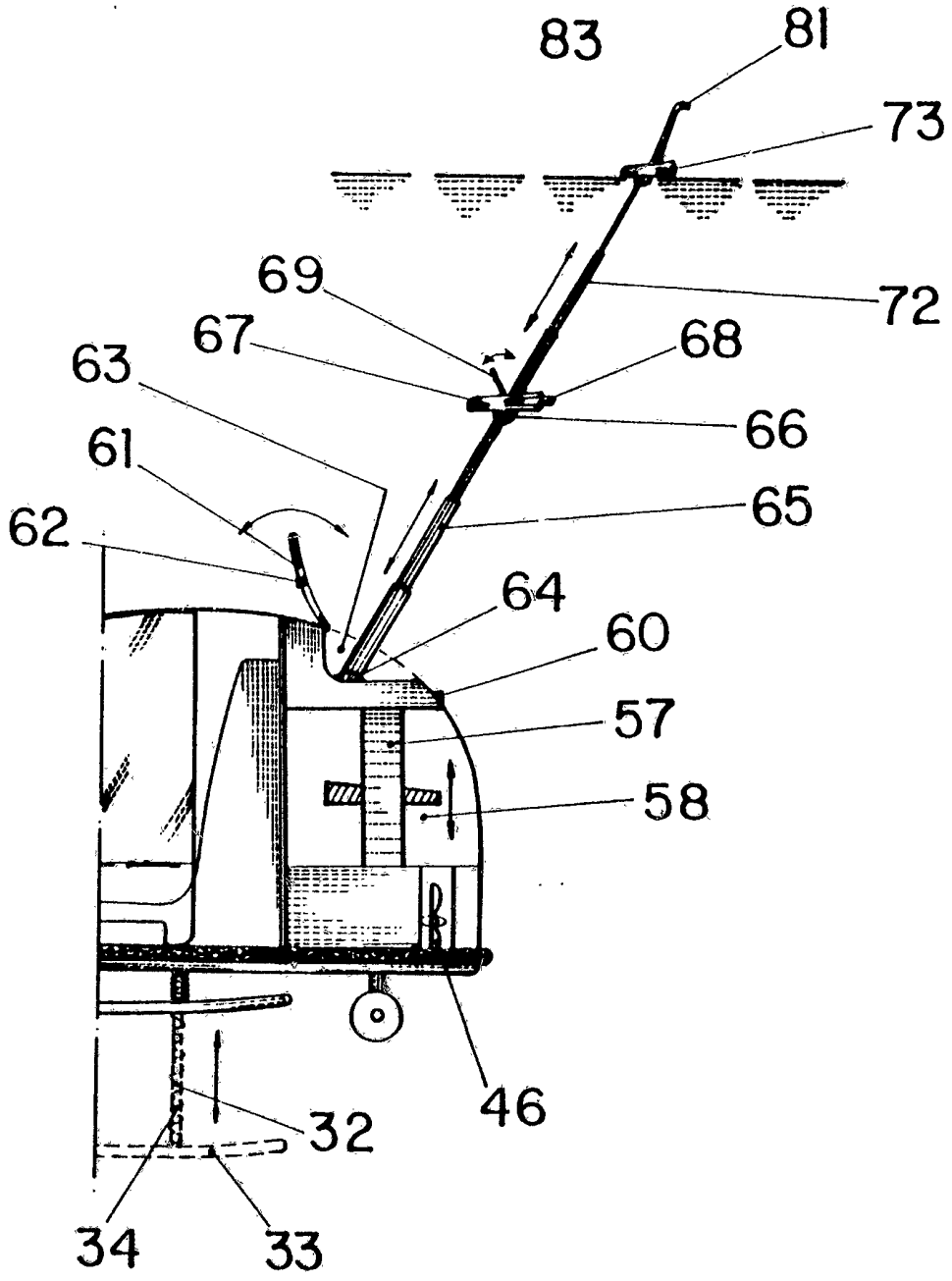

FIG.9

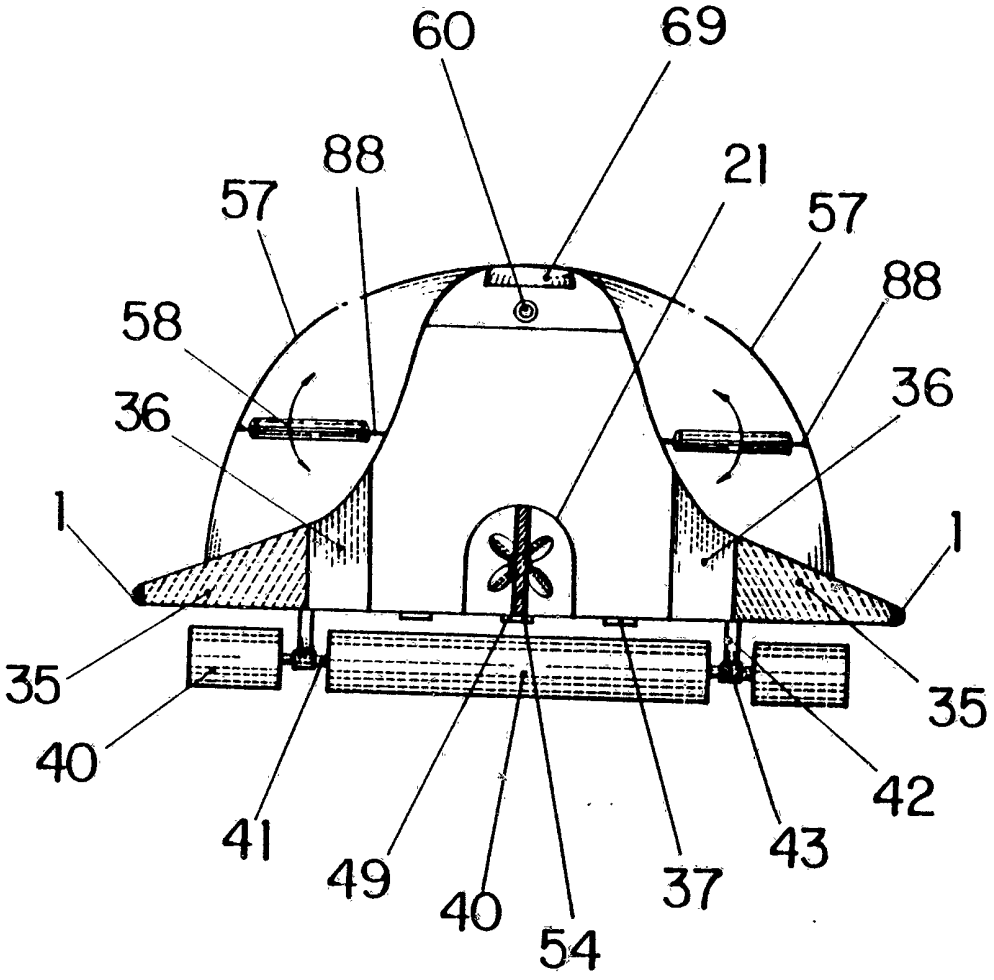

FIG.10

hoja 8/10

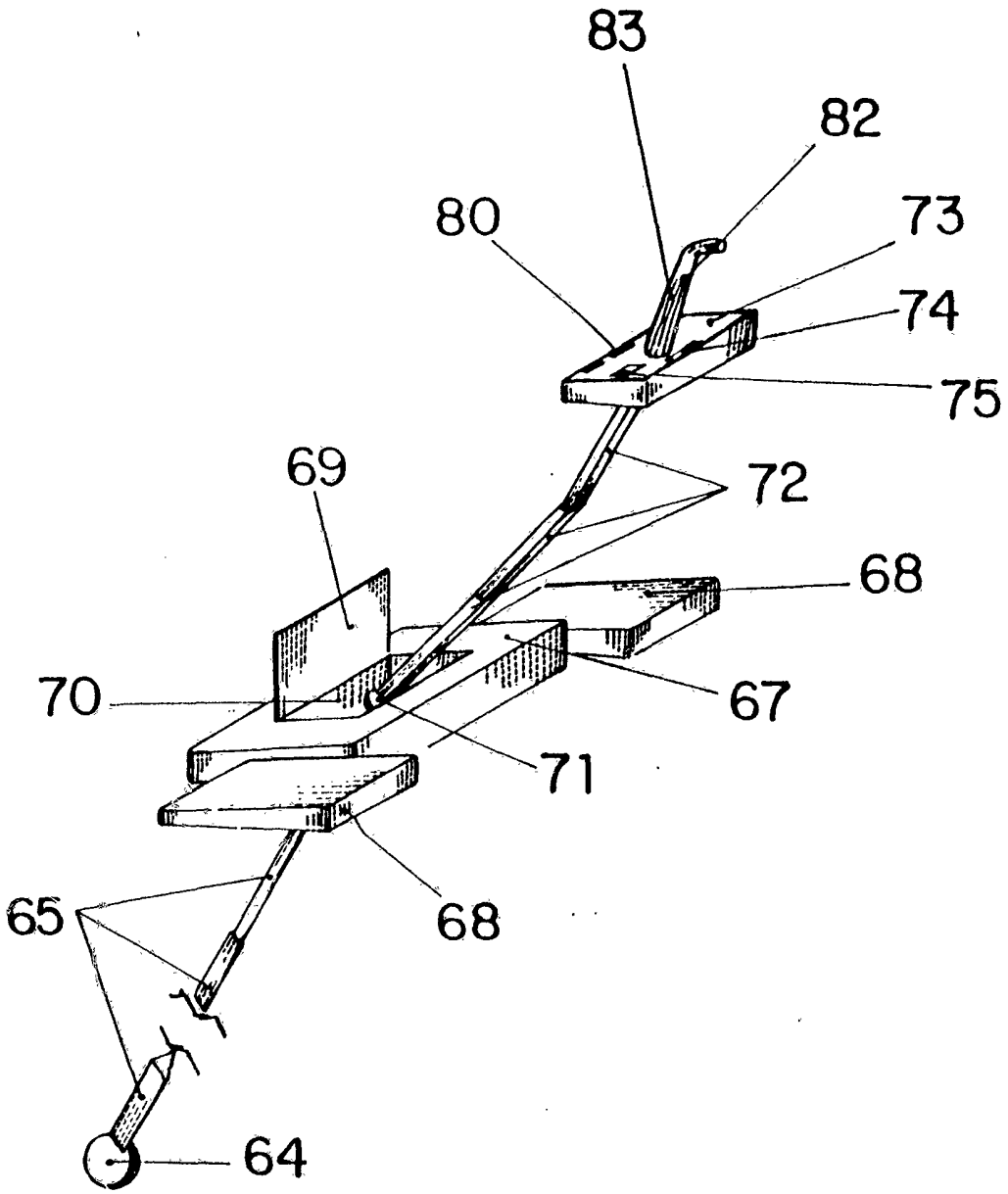

FIG11

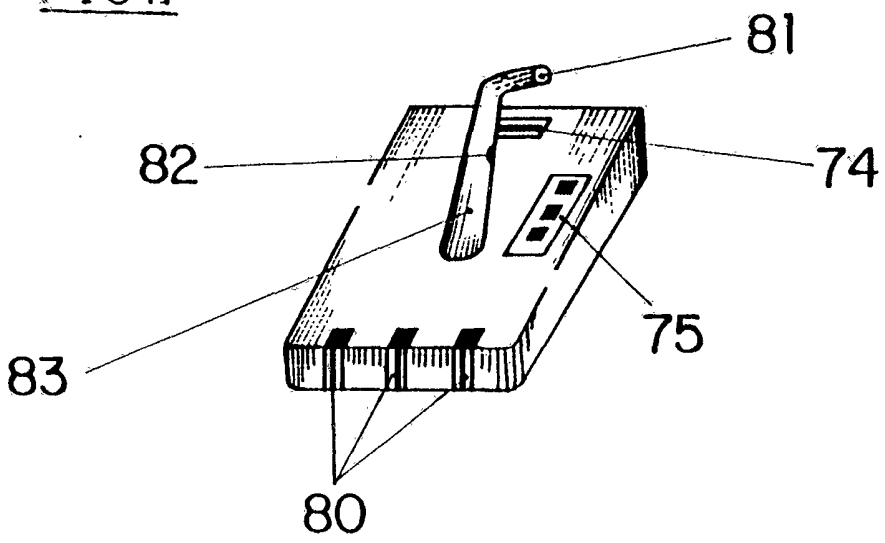

FIG.12

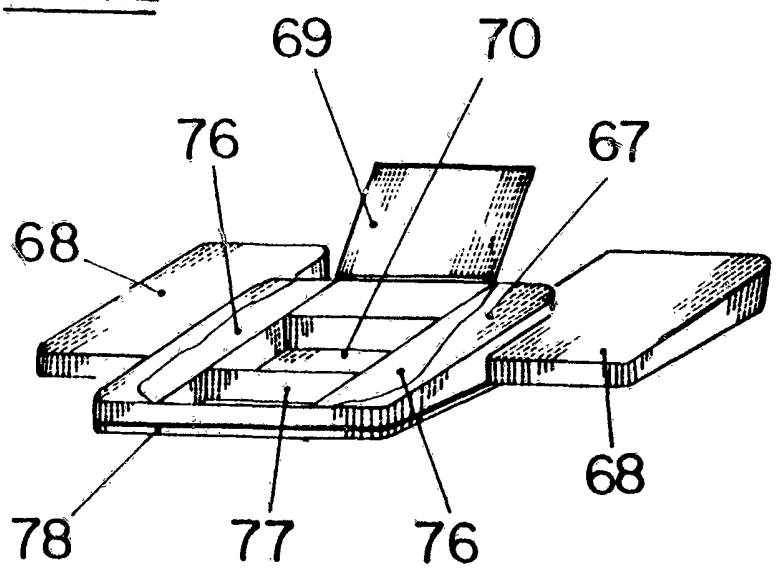

FIG.13

