Oct. 30, 1945. R. MONNIER 2,387,928

HAND TOOL

Filed Jan. 27, 1944 2 Sheets-Sheet 1

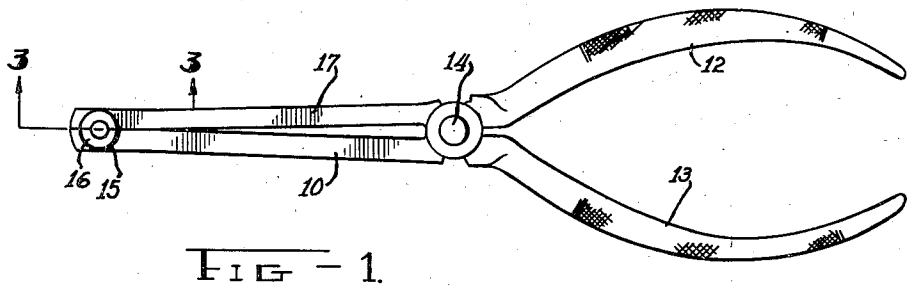

FIG - 1.

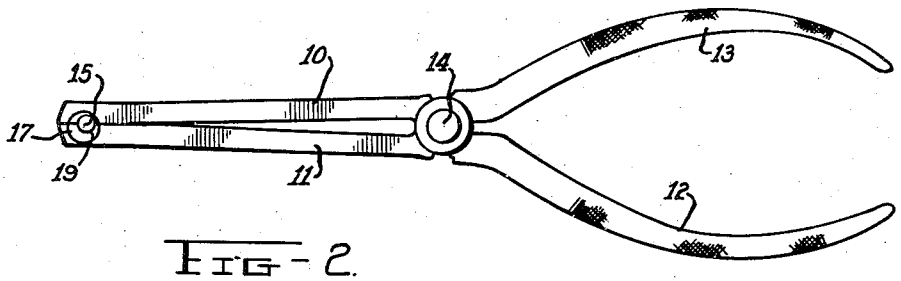

FIG - 2.

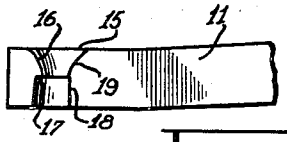

FIG - 3.

FIG - 4

INVENTOR.
RUSSEL MONNIER.

BY

Edward M. Apple

Oct. 30, 1945. R. MONNIER 2,387,928

HAND TOOL

Filed Jan. 27, 1944 2 Sheets-Sheet 2

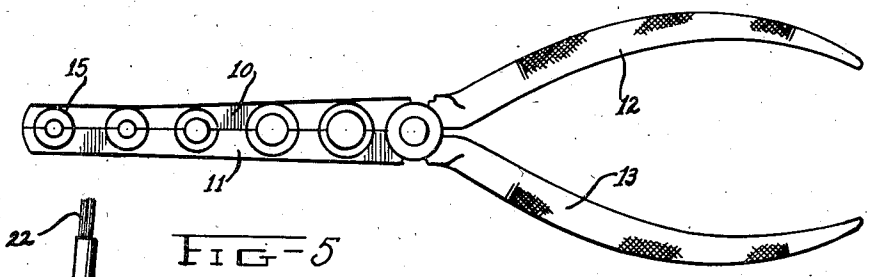

FIG-5

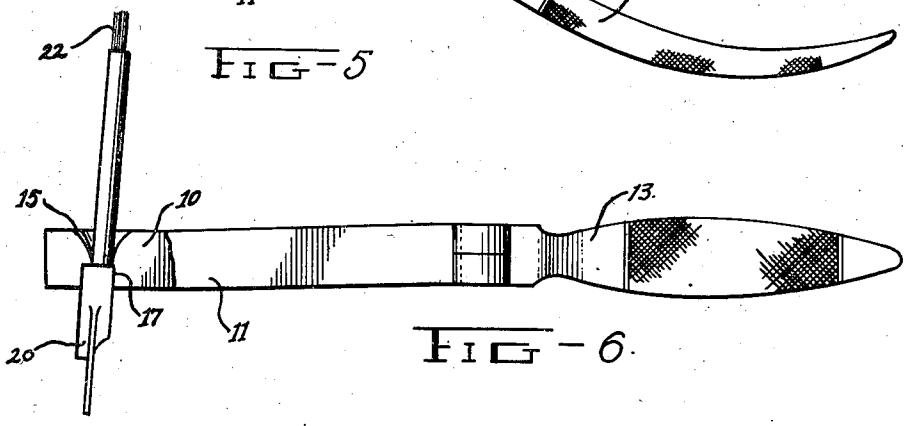

FIG-6

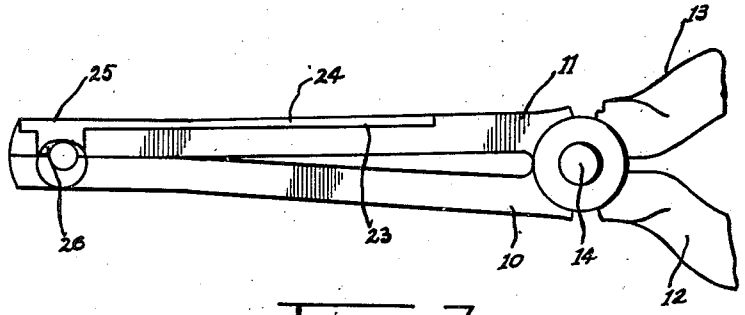

FIG-7

INVENTOR.
RUSSEL MONNIER.

BY Edward M. Apple

Patented Oct. 30, 1945 2,387,928

UNITED STATES PATENT OFFICE

2,387,928

HAND TOOL

Russel Monnier, Detroit, Mich.

Application January 27, 1944, Serial No. 519,845

3 Claims. (Cl. 81—5.1)

This invention relates to hand tools and has particular reference to a special tool for entering the ends of a stranded wire into an aperture. It is particularly designed for entering stranded wire into the hole of a stake-on lug or terminal.

In utilizing certain types of lugs or wire terminals it is very difficult to insert the stranded wire in the aperture of the lug, preparatory to the staking operation, particularly is such insertion difficult where the aperture is not exactly round or where there is some interior obstruction in the hole, as is the case when a lug is used as shown in the drawings.

In certain applications the lugs or terminals are secured to the fixtures before the latter are wired, and often times they are secured in inacessible places, where it is impossible to insert the wires, without damaging the ends, or displacing some of the fine strands of wire.

It is therefore an object of the invention to provide a tool which will enable the operator to efficiently and quickly enter the stranded wire in the hole.

Another object of the invention is the provision of a tool of the character described which is adapted to automatically bring the multiple ends of a stranded wire into strict conformation with the hole to be entered.

Another object of the invention is the provision of a tool of the character described, which is adapted to securely grasp the lug while the stranded wire is being inserted in its aperture.

The foregoing objects and other advantages of the invention will become more apparent as the description proceeds, reference being made from time to time, to the accompanying drawings, in which:

Fig. 1 is a side elevation of a device embodying my invention.

Fig. 2 is a reverse side elevation of the device illustrated in Fig. 1.

Fig. 3 is an enlarged fragmentary detail taken substantially on the line 3—3 of Fig. 1.

Fig. 4 is a top plan view of the device illustrated in Fig. 2, with elements to be worked upon in adjusted position.

Fig. 5 is a modified form of the device illustrated in Fig. 1, with a plurality of openings adapted to accommodate various size elements.

Fig. 6 is a view similar to Fig. 4, with parts broken away and showing the position of the elements worked upon after the insertion of the stranded wire in the terminal.

Fig. 7 is a modified form of the device illustrated in Fig. 2, showing the use of a spring detent for securely grasping the terminal during the wire inserting operation.

Referring now more particularly to the drawings, it will be understood that in the embodiment herein disclosed, my improved device consists of a pair of jaws 10 and 11, having complementary handles 12 and 13, which are pivoted at 14, to function in the manner of a pair of pliers. The device is provided on one side (Figs. 1 and 3) with a circular bore 15 having inclined side walls 16. The device is provided on the opposite side (Figs. 2 and 3) with a circular bore 17, having substantially straight walls 18. The bores 15 and 17 communicate with one another, but the bore 17 is larger than the reduced end 19 of the bore 15, and is off center with respect to the center of the bore 15 as shown in Figs. 2 and 3 to accommodate the special lug or terminal 20, which is provided with a central passageway 21, shown in dotted lines, which passageway 21 is offset with respect to the longitudinal axis of the lug 20.

The bore 17 is designed to accommodate and firmly hold the lug 20, while the stranded wires 22, are brought into position for entry into the bore 15 and hence into the passageway 21 of the terminal 20. The inclined walls 16 of the bore 15 guide the individual strands of the wire 22 compressing them into a reduced circumference for final entry into the opening 21 of the terminal 20, as shown in Fig. 6, after which the terminal 20 may be secured to the wire 22, by staking, soldering, welding, or other suitable means.

In Fig. 5 I have illustrated a modified form of device wherein a plurality of openings are provided to accommodate various sizes of lugs and wires.

In Fig. 7 I have illustrated a modified form of device in which the jaw 11, is machined out as at 23, to accommodate a spring detent 24, which is secured thereto by welding or other suitable means. The spring detent 24 is provided with an end member 25, which has a semi-circular slot 26, adapted to contact the outside wall of the lug 20, to firmly hold the same in position, during the operation of inserting the wire 22. This spring detent holding element automatically compensates for any wear in the device, which might allow the terminal 20 to fit loosely.

Having described my invention, what I claim and desire to secure by Letters Patent is:

1. A device of the character described comprising a pair of jaws, means in said jaws for securely holding a wire terminal, and means in said jaws for assisting the endwise entry of a stranded wire into an opening in said terminal, both said means

including a straight bore and a tapered bore in communication with said straight bore and eccentric thereto.

2. In a device of the character described the combination of a pair of co-acting jaws, each jaw having cut-out portions on their inside surfaces, the cut-out portions being arranged to form communicating bores, one of which is straight and the other of which is tapered, said bores being arranged in eccentric relation to one another.

3. In a device of the character described the combination of a pair of co-acting jaws, each jaw having cut-out portions on their inside surfaces, the cut-out portions being arranged to form communicating bores, one of which is straight and the other of which is tapered, at least one of said jaws being provided with a spring member adapted to restrict the area of one of said bores.

RUSSEL MONNIER.