April 11, 1967 M. M. MARKS 3,313,941

IDENTIFYING APPARATUS EMPLOYING FIBERS AND POLARIZED LIGHT

Filed Nov. 12, 1963 2 Sheets-Sheet 1

FIG. 1

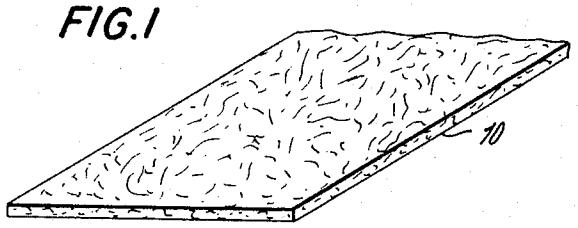

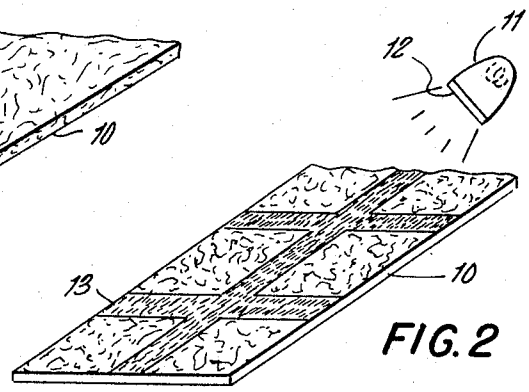

FIG. 2

FIG. 3

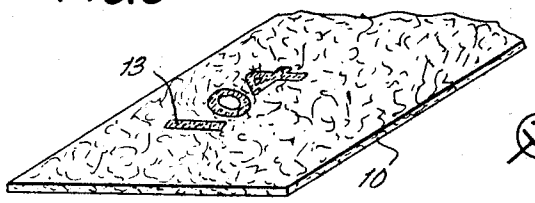

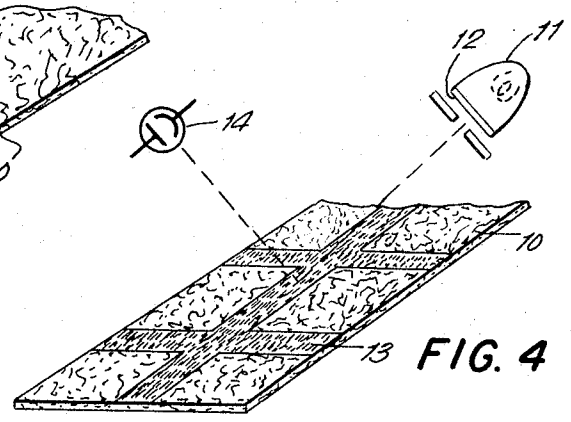

FIG. 4

FIG. 5



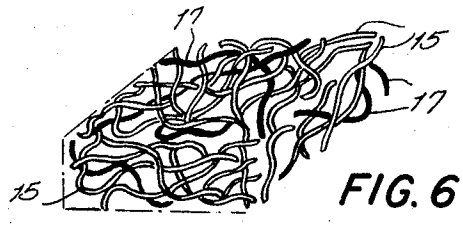

FIG. 6

INVENTOR.
MORTIMER M. MARKS
BY Albert F. Kronman
ATTORNEY

April 11, 1967 M. M. MARKS 3,313,941

IDENTIFYING APPARATUS EMPLOYING FIBERS AND POLARIZED LIGHT

Filed Nov. 12, 1963 2 Sheets-Sheet 2

FIG. 9

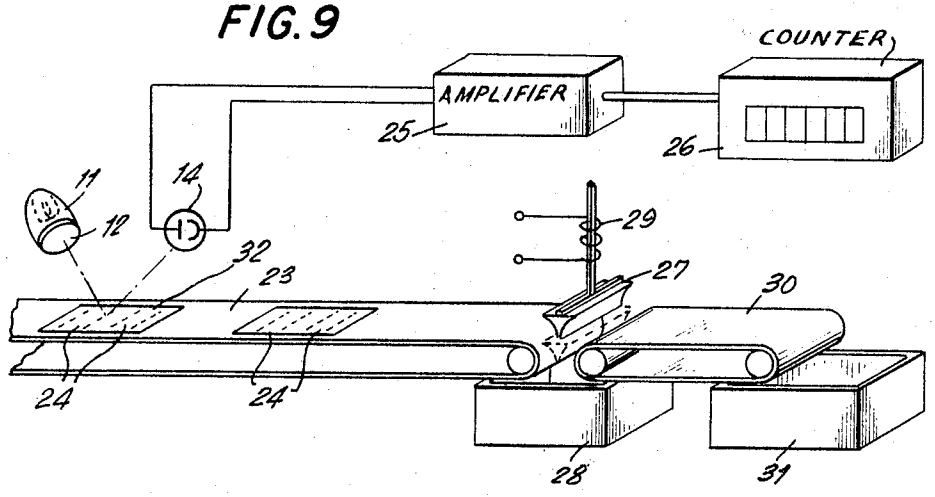

FIG. 7

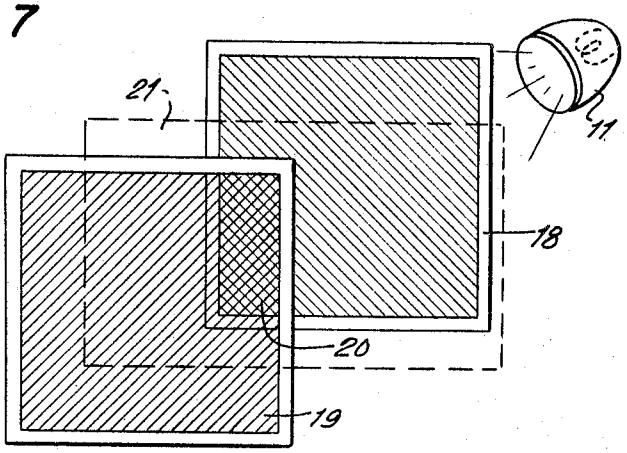

FIG. 8

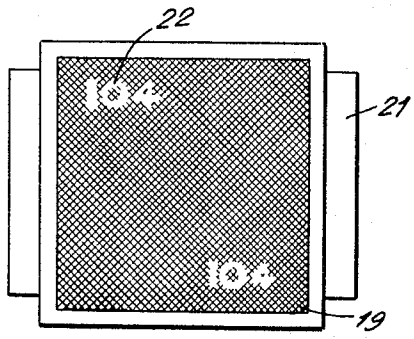

INVENTOR.
MORTIMER M. MARKS
BY Albert F. Kroman
ATTORNEY

United States Patent Office 3,313,941 Patented Apr. 11, 1967

3,313,941

IDENTIFYING APPARATUS EMPLOYING FIBERS AND POLARIZED LIGHT

Mortimer M. Marks, 166—25 Cryders Lane, Whitestone, N.Y. 11357

Filed Nov. 12, 1963, Ser. No. 322,970
6 Claims. (Cl. 250—219)

This invention relates to sheet-form materials such as paper or the like having identifying indicia integral therewith. More particularly, this invention relates to sheet-form materials having identifying indicia which are invisible or not readily apparent under normal lighting conditions, but which will be readily apparent when illuminated by polarized light.

For many purposes, there exists a need for readily identifying papers, fabrics and the like by means which are not readily apparent. Among such purposes may be mentioned the marking of documents for future tracing, the application of various kinds of indicia to cloth for identification and other purposes, and the protection of currency, commercial paper, securities and the like against counterfeiting.

One presently employed method of applying normally invisible indicia to such materials is to mark them with a fluorescent dye which becomes visible only when irradiated with ultra-violet light. This method is widely used, for example, in the application of invisible laundry marks to clothing and the like. While useful and successful for many purposes, this method has certain disadvantages. For one thing, the dyes used are subject to gradual fading and loss in the course of handling, laundering or dry-cleaning, and general use. For another, the dyes are readily obtainable by anyone, and may be applied to the article with simple, readily-available equipment, so that the identifying indicia are themselves susceptible of counterfeiting. In addition, the widespread use of this device has deprived it of its effectiveness for security purposes.

An object of this invention, therefore, is to provide an improved sheet-form material having normally-invisible identifying indicia.

Another object of this invention is to provide a sheet having identifying indicia which are permanent for the useful life of the sheet.

Still another object of the present invention is to provide a sheet having normally-invisible identifying indicia which are not readily counterfeited.

Other objects and advantages will become apparent from the following more complete description and claims.

A feature of the present invention is the use of a sheet composed partly of isotropic fibers and partly of anisotropic fibers.

Another feature of this invention is the use of a sheet composed of isotropic fibers having an appreciable proportion of anisotropic fibers selectively distributed therethrough.

Still another feature is the use of a sheet composed of isotropic fibers having indicia in the form of anisotropic fibers on the surface of the sheet.

A particularly advantageous feature of the present invention is the use of a sheet provided with normally invisible indicia in the form of anisotropic, light polarizing fibers, which are readily made visible under appropriate lighting conditions.

Another feature of the present invention is the use of indicia in the form of fibers for identification, tracing and authentication of documents, currency and the like.

Still another feature is the utilization of indicia in the form of fibers for counting of currency and the like.

The invention consists of the construction, combination and arrangement of parts and of operating steps, as herein illustrated, described and claimed.

In the accompanying drawings, forming a part hereof are illustrated several forms of the invention and in which:

FIGURE 1 is a somewhat isometric view of a portion of a fibrous sheet made in accordance with the present invention as viewed under unpolarized light.

FIGURE 2 is a view similar to FIGURE 1 showing the sheet of FIGURE 1 as it appears under polarized light.

FIGURE 3 is a somewhat isometric view similar to FIGURES 1 and 2 showing a sheet made in accordance with the present invention displaying another type of indicia, as viewed under polarized light.

FIGURE 4 is a somewhat diagrammatic, isometric view of an apparatus for photo-electrically sensing the presence of normally-invisible indicia in a sheet according to the present invention.

FIGURE 5 is an enlarged fragmentary view of a portion of a sheet made in accordance with the present invention showing the deposition of dichroic fibers on the surface of a sheet made of isotropic fibers.

FIGURE 6 is an enlarged fragmentary view similar to FIGURE 5 showing a sheet comprising another embodiment of the present invention in which birefringent fibers are dispersed throughout a sheet of isotropic fibers.

FIGURE 7 is an exploded somewhat isometric view of an apparatus for detecting the presence of birefringent fibers.

FIGURE 8 shows an appearance of a sheet bearing indicia in the form of birefringent fibers when viewed through crossed polarizers.

FIGURE 9 is a view in side elevation in somewhat diagrammatic form of an appaartus for automatically counting and handling currency made in accordance with the present invention.

Referring to the drawings and particularly to FIGURES 1 and 2; **10** indicates a sheet composed in part of isotropic fibers and containing therein a certain proportion of dichroic fibers. Under normal, unpolarized light, the sheet **10** appears as illustrated in FIGURE 1, i.e., the dichroic fibers and isotropic fibers are indistinguishable from one another. When the same sheet **10** is viewed in polarized light, emanating from a suitable light source generally indicated in FIGURE 2 at **11** and directed through a polarizer **12**, it assumes the appearance shown in FIGURE 2. In this embodiment of the invention the dichroic fibers are arranged in selected areas so as to form a pattern **13**. The dichroic fibers are oriented within the pattern **13**, in sufficient proportion to absorb the incident polarized light, thus causing the areas constituting the pattern to appear darker than the remainder of the sheet.

The term dichroic fibers is used herein as meaning a fiber whose molecules possess the property of showing dichroism, where dichroism is the property of differential absorption of the components of an incident beam of light, depending upon the vibration directions of said components.

Fibrous, sheet-form materials useful according to the present invention include papers, cardboards, and similar materials. Among the isotropic fibers from which these sheets can be made may be mentioned such materials as glass fibre and cellulose acetate fibre, which are useful for the manufacture of paper, as well as similar fibrous materials from which paper or paper-like sheets can be made. Such fibers, in general, have substantially no orientation in their structures, and therefore have the same appearance whether the incident light is polarized or unpolarized. Between crossed polarizers, such materials exhibit a uniformly black field. Dichroic fibers may be incorporated into sheets made of a wide variety of fibers well-known in the paper and cardboard art.

Anisotropic or polarizing fibers, as the term is used

herein, include not only dichroic fibers, which transmit only a linearly polarized (plane-polarized) portion of an incident unpolarized light beam, but also birefringent fibers, which resolve an incident polarized beam into two emergent beams polarized at right angles to each other, although, not absorbing and thus eliminating one of the light components, as do the dichroic fibers. The dichroic fibers become visible under polarized light by virtue of the fact that those fibers whose polarization axes are at or near right angles to the axis of polarization of the incident light will absorb substantially all of the incident light. This absorption causes them to appear darker when illuminated by polarized light. The birefringent fibers require the interposition of a second polarizer, i.e., an analyzer, to detect the presence of the polarization effect as shown.

Among the dichroic fibers that may be employed according to this invention may be mentioned, as particularly desirable, ramie fibers which have been stained or dyed with iodine and zinc chloride, or with selected dyes, such as Congo Red well known in the light polarizing art. Numerous other fibers and numerous other methods of rendering the fibers dichroic are well known to the art, and may also be used with good results. In general, the fiber must be molecularly oriented, in order to cause the dye to assume a corresponding orientation. Some fibers, including ramie, are characterized by a natural orientation, and can be dyed in the natural state to produce fibers which are dichroic to a useful degree. The degree of orientation of such fibers can be and preferably is increased by known methods of stretch-orientation, usually after a preliminary softening. The increased degree of orientation thus achieved results in an enhancement of the dichroism of the dyed fiber. Other fibers, including the majority of natural fibers, are not inherently oriented. Many of them, however, can be oriented by stretch-orientation methods, and when dyed make very satisfactory dichroic fibers, as is also well known to the art. Among the fibers that can be so treated are cellulosic and regenerated cellulosic fibers, including cellulose acetate, ethylcellulose, viscose and the like, and synthetic fibrous materials such as the fibrous forms of vinyl acetal resins, polyvinyl butyral, etc.

Many dyes and coloring agents (all referred to herein as dyes) may be used in place of those above mentioned, as will also be apparent to those skilled in the art. Various direct cotton dyes such as National Erie Black GXOO (C.I. 581), Amanil Black (C.I. 395), Amanil Fast Black (C.I. 545) and others have been used with success, as well as mordant dyes such as logwood, and metals, including mercury, gold, silver and copper, among others. Bromine may also be used in place of the iodine mentioned above. Techniques for applying these agents to the fiber are in general the same as the techniques used for applying them to sheet and are well known to the art and need not be discussed in detail.

All dichroic fibers absorb an appreciable fraction of the unpolarized light that normally falls upon them, and no dichroic fiber, therefore, has a pure white appearance. Where an off-white sheet is acceptable, or where the color of the fiber may be masked by, or be part of, a printed design or the like, this presents no problem. Where the sheet is required to be pure white, the dichroic fibers cannot be used. The second class of polarizing fibers referred to above, namely the birefringent fibers, are particularly advantageous in applications of this type.

The birefringent fibers are characterized by an optical property such that when placed in the path of a polarized light beam, they transmit two beams, one the "ordinary" ray, which vibrates in the plane of polarization of the incident ray, and the other the "extraordinary" ray, which vibrates in a plane at right angles thereto. When viewed between crossed polarizers, the ordinary ray is extinguished, but the extraordinary ray is transmitted through the analyzer, appearing either as brilliant colors or as white light, depending on the degree of orientation of the fiber. Undyed ramie fiber in the untreated state possesses such birefringent properties to a useful degree, and its birefringency may be greatly enhanced by softening and stretch-orienting. Other fibers, although not naturally birefringent, may be made so by similar methods—i.e. softening and stretch-orienting, and may also be used in the practice of this invention with good success. Among such other fibers may be mentioned cotton and other natural cellulosic fibers, as well as synthetic fibers such as polyvinyl alcohol, polyvinyl butyral, cellulose acetate, cellulose butyrate, polyesters and the like.

Papers and the like according to this invention, containing dichroic or birefringent fibers as means of identification and authentication may be made in various ways. The birefringent fibers may be introduced by mixing them with the isotropic fibre stock before forming the paper web, or they may be applied to the finished web after drying, for example by printing them onto the surface of the web at a later time, to form a printed sheet such as that shown in FIGURE 5. As a practical matter it is usually preferred to apply the dichroic fibers to the finished paper web, or to articles made therefrom, because the conditions obtaining during the papermaking operation are such that the dyes used to make the fibers dichroic are in most cases adversely affected if not destroyed. In some cases it may be possible to overcome this difficulty by incorporating the undyed dichroic fibers into the paper stock with their polarizing axes substantially parallel and dying them on the web after the paper is made using the same color dye for both the isotropic fibers constituting the bulk of the paper and the polarizing fibers. Application of the fibers to the surface of the finished web disposed with their polarizing axes substantially parallel offers an additional advantage in the fact that they may then be printed in any desired characteristic pattern, instead of being distributed throughout the web. Such patterns are illustrated in FIGURES 2, 3 and 4, for example.

When the polarizing fibers to be used are birefringent, rather than dichroic, the preservation of a dyestuff is not a factor, and the birefringent fibers may ordinarily be used as a raw material additive if so desired. This method offers the advantage of convenience, but gives less control over the appearance of the indicia, which then merely consists of a detectable admixture of randomly-distributed bierfringent fibers. If the indicia are required to be more distinctive, for example numerals or patterns, they may of course be incorporated into the web in the same manner as above described with reference to the dichroic fibers. FIGURE 6 illustrates the structure of a web made of isortopic fibers **15**, containing an appreciable proportion of birefringent fibers **17** randomly dispersed throughout the sheet. If desired, the birefringent fibers may of course be secured to the surface, as shown in FIGURE 5.

Indicia in the form of birefringent fibers will not become visible merely upon illumination with polarized light. Rather, it is necessary to use spaced crossed polarizers, as exemplified by the apparatus illustrated in FIGURE 7. Such apparatus includes a light source **11**, a polarizer **18** and an analyzer **19**. The analyzer is simply a second polarizer with its plane of polarization at right angles to that of polarizer **18**. All or substantially all of the light from light source **11** is normally absorbed by the polarizer-analyzer combination, as indicated at the cross-hatched area **20**. When a specimen is interposed between the polarizer and the analyzer (as indicated in phantom at **21** in FIGURE 7), the field will remain dark if only isotropic materials are in the light path. If birefringent fibers are present in the specimen, however, such fibers will resolve the incident polarized light into emergent ordinary rays, which are absorbed by the analyzer, and extrodinary rays which vibrate in the same plane as the analyzer and are therefore transmitted. Indicia in the form of birefringent fibers, therefore, ap-

pear light against a dark background as shown at **22** in FIGURE 8.

As applied, for example, to the identification of currency and the like, the sheet materials of this invention possess additional advantages accruing from the fact that their identifying characteristics are detectable by physical measuring apparatus. Thus, when properly illuminated, by polarized light or by being interposed between crossed polarizers, the presence of polarizing fibers is signaled by changes in brightness. These may be visually observed, but may also be detected by photosensitive detectors such as photocells, and the authentication of the currency thus made automatic. If desired, similar equipment may be used to discriminate between bills of various denominations by distinguishing between polarizing-fiber areas of different number, extent, position, pattern or optical characteristics. Counterfeits, having no polarized areas, are rejected.

FIGURE 9 illustrates in partially schematic form an apparatus for counting currency according to the present invention. In the apparatus of FIGURE 9, bills **32** are fed, either by hand or by automatic handling equipment, onto a belt **23** and are transported by the belt into and through a counting zone where they are illuminated by polarized light from a suitable source **11, 12**. The light reflected from each successive bill **32** is picked up by a photocell **14**. Each bill is provided with one or more areas **24** having dichoric fibers on the surface thereof, and each of these will register as a minimum, or dark area, on the photocell. The photocell signal is transmitted to an amplifier **25**, a counter **26**, which totalizes the number of bills passed through in accordance with the number of such information sensed by the photocell. Bills of differing denomination are provided with differing patterns of dichroic indicia, and it is a simple matter to provide discriminating circuitry such as to distinguish, for example between a slow alternation between maxima and minima (corresponding to relatively widely-spaced polarizing areas) and a rapid alternation, corresponding to closely-spaced indicia characteristic of a different denomination. Such circuitry (not shown), can be used to operate auxiliary equipment, indicated by gate **27** in FIGURE 9, so as to sort out bills of differing denominations. When gate **27** is in the upper position as shown, it directs the bill downwardly into receiver **28**. When, in response to signals corresponding to a bill of a different denomination or indicia, solenoid **29** drops the gate to the lower position shown in phantom, the bill passes over the top of the gate and on to belt **30**, which transports it to a different receiver **31**. By the same token, counterfeit bills having no polarizing areas will not register on the counter, and if desired may be routed by similar auxiliary equipment to a "reject" receiver.

It will be seen that the present invention provides a novel sheet-form material in various improved embodiments, having normally-invisible identifying indicia which may be incorporated directly into the structure of the sheet or may be glued or otherwise applied to the surface thereof. The indicia are readily made visible under proper conditions of illumination, and do not require complicated or expensive equipment to make them so. The indicia are substantially permanent for the useful life of the sheet. While easily applied to or incorporated into the sheet in the course of manufacture, they are not readily counterfeited. They therefore provide highly effective means for identification and authentication of the sheet to which they are applied in accordance with this invention.

Other equivalents and alternatives will readily occur to those skilled in the art, without departing from the spirit or scope of the present invention. For example, many other polarizing fibers may be used in place of these specifically mentioned, and various other dyes and techniques may be used to make such fibers. Also, numerous methods may be used for applying the fibers to the sheet or incorporating them therein. To mention one, the polarizing fibers may be threaded into a finished paper web instead of being added to the stock or secured to the surface.

Therefore, while this invention has been described with reference to certain preferred and specific embodiments, these are illustrative only, and the invention is not to be construed as limited, except as set forth in the appended claims.

Having thus fully described the invention, what is claimed as new and desired to be secured by Letters Patent of the United States, is:

1. Paper document-counting apparatus comprising in combination means for transporting a paper document through a counting zone, polarized light illuminating means for rendering visible normally-invisible indicia in the from of light-polarizing fibers integral with a paper document in said counting zone, photoelectric sensing means for detecting said indicia when the same are made visible, and counting means responsive to said sensing means for totalizing the number of responses of said sensing means to said indicia.

2. The invention according to claim **1**, wherein said paper document is composed in part of dichroic fibers and in part of isotropic fibers, said dichroic fibers being distributed in predetermined, identifiable spatial relationship, and substantially parallel orientation.

3. The invention according to claim **1**, wherein said paper document is composed in part of birefringent fibers and in part of non-birefringent fibers, said birefringent fibers being distributed in a predetermined, identifiable spatial relationship, and analyzing means are provided in front of the photoelectric means.

4. The invention according to claim **1**, wherein said paper document is composed in part of light-polarizing fibers and in part of non-light-polarizing fibers, said light-polarizing fibers being distributed according to a predetermined, identifiable pattern.

5. The invention according to claim **1**, wherein said paper document is composed in part of light-polarizing fibers having their axes of polarization in substantially parallel orientation and in part of non-light-polarizing fibers.

6. The invention according to claim **1**, wherein said paper document bears normally-invisible identifying indicia in the form of dichroic fibers having their axes of polarization in substantially parallel orientation distributed according to a predetermined, identifiable pattern.

References Cited by the Examiner

UNITED STATES PATENTS

2,130,948	9/1938	Carothers	88—65
2,139,269	12/1938	Householder et al.	88—65
2,593,206	4/1952	Short	250—219 X
2,789,935	5/1957	Drummond et al.	162—146 X
3,054,204	9/1962	Yates	40—106.52

WALTER STOLWEIN, *Primary Examiner.*