Aug. 5, 1941. S. GILBERT 2,251,588

ENGINE STARTING MECHANISM

Filed Jan. 27, 1940

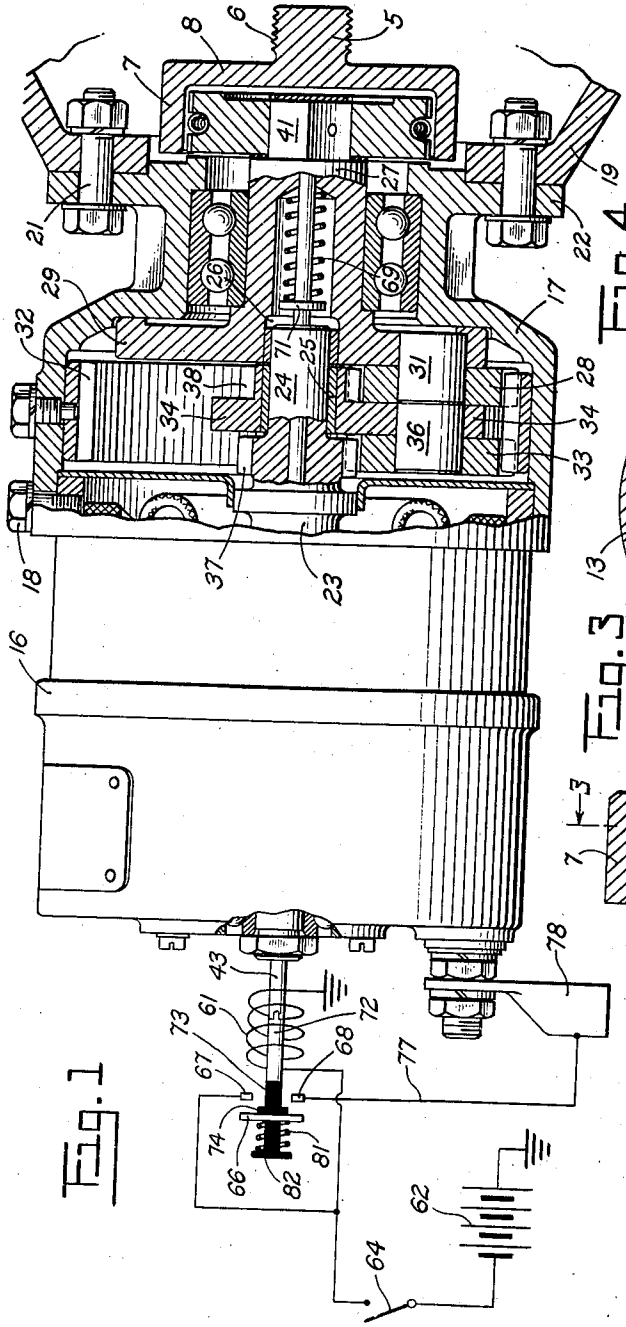

Fig. 1

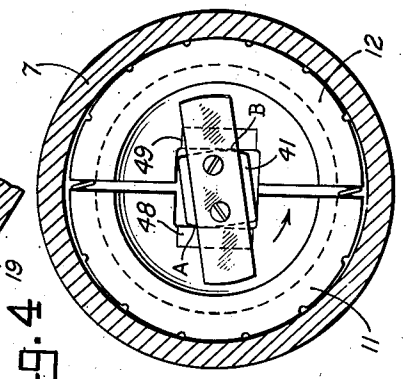

Fig. 4

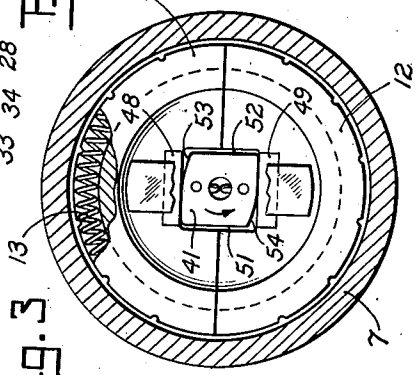

Fig. 3

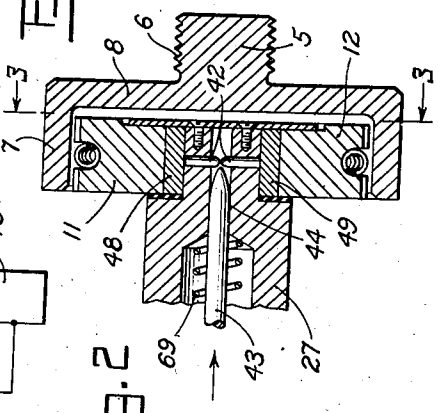

Fig. 2

INVENTOR.
Samuel Gilbert
BY
Martin J. Finnegan
ATTORNEY.

Patented Aug. 5, 1941 2,251,588

UNITED STATES PATENT OFFICE

2,251,588

ENGINE STARTING MECHANISM

Samuel Gilbert, Verona, N. J., assignor to Bendix Aviation Corporation, South Bend, Ind., a corporation of Delaware

Application January 27, 1940, Serial No. 316,021

7 Claims. (Cl. 192—54)

This invention relates to engine starting mechanism, and particularly to starting mechanism adapted to impart initial rotary movement to a rotatable part of the engine to be started, yet mechanically separate therefrom during normal running of the engine.

An object of the invention is to provide a starting device in which the establishment of driving connection with the engine is direct, immediate and positive, yet characterized by an absence of any considerable amount of shock to the parts, and also by an absence of any substantial amount of energy dissipation.

Another object is to provide a starting device in which overloading of the starting motor is prevented by the inherent tendency of the driving connection to yield when the torque exceeds the limit value; there being, however, no yielding parts other than the engine engaging parts, and said parts being automatically withdrawn to positions of complete separation from the rotating engine parts, at the end of the engine starting cycle, wherefore normal running of the engine does not involve the rotation therewith of any engine starter parts.

These and other objects of the invention will become apparent from inspection of the following specification when read with reference to the accompanying drawing wherein is illustrated the preferred embodiment of the invention. It is to be expressly understood, however, that the drawing is for the purpose of illustration only, and is not designed as a definition of the limits of the invention, reference being had to appended claims for this purpose.

In the drawing—

Fig. 1 is a combined sectional, elevation and diagrammatic view of a device embodying the invention;

Fig. 2 is a longitudinal sectional view of the engine engaging elements and certain associated parts on a slightly larger scale than shown in Fig. 1;

Fig. 3 is a transverse sectional view along the line 3—3 of Fig. 2; and

Fig. 4 is a view similar to Fig. 3 but with the elements in the positions occupied during transfer of starting torque to the engine member.

In this drawing the invention is shown applied to the starting of an internal combustion engine having a flanged rotatable element 5 provided with threads or equivalent means 6 for attachment of the engine crankshaft or some crankshaft connected element, and further having a cylindrical rim 7 integral with the flanged portion 8 to form a drum whose inner cylindrical surface is adapted to be engaged by radially movable shoes, herein shown in the form of semi-cylindrical segments 11 and 12 having circumferential grooves which together form a circular channel for reception of a toroidal spring 13 having sufficient tension to normally hold the engine engaging elements 11 and 12 in the non-engaging positions indicated in Figs. 1 and 3, but insufficient to prevent movement of said segments into driving engagement with the inner surface of the drum 7 in response to operation of the engaging means hereinafter described.

The driving means of the starter is shown in Fig. 1 as involving an electric motor contained in a casing 16 forming one part of the sectional housing of the starter and attachable to the adjoining section 17 by suitable means as indicated at 18; the starter section 17 being in turn supported upon the mounting flange 19 of the engine crankcase by means of the through-bolts 21 which couple the flange 22 of the section 17 to the said mounting flange 19. The armature shaft 23 of the motor is shown as having an extending portion 24 piloted, with the aid of the friction reducing sleeve 25, within the socketed portion 26 of a member 27 which drivably connects the planet pinions 28 of a planetary gear train with the engine engaging shoes 11 and 12. The connection of the member 27 with the planet pinions 28 takes the form of a flanged portion 29 which serves as a carrier for the shafts 31 on which the pinions 28 are mounted, there being preferably three of such pinions spaced at equal annular intervals about the axis of the stationary, internally toothed orbit gear 32 with which said pinions are in mesh, although only one of the three pinions of the group is actually shown in Fig. 1. Associated with planets 28 is a second set of planets 33 correspondingly spaced and also in mesh with the teeth of the orbit gear 32, although only one of this group of pinions 33 appears in Fig. 1. A Y-shaped plate 34 serves to space the pinions 33 from the pinions 28, and is provided with openings to receive the hubs 36 which also extend through the pinions 33 and constitute mounting means, in conjunction with the plate 34, for the said pinions 33. Cooperating with pinions 33 and 28, respectively, are sun gears 37 and 38, the former being shown as an integral part of the extended portion 24 of the armature shaft 23, while the sun gear 38 is rotatably mounted on the bearing sleeve 25 heretofore re-

ferred to, and is integral with plate 34. The sun gears 37 and 38 therefore complete the planetary system for converting the rotation of armature shaft 23 into rotation of the member 27 at reduced speed. Member 27 has a reduced end 41 engaging shoes 11 and 12 whereby rotation of member 27 produces corresponding rotation of said engine-engaging shoes 11 and 12.

The means for moving the shoes 11 and 12 into torque-transmitting engagement with the engine member 7 involves the reduced end portion 41 of the transmission member 27, also a plurality of radially extending pins 42 passing through radial openings in said reduced portion 41, and a longitudinally shiftable rod 43 extending into the bore 44 (Fig. 2) in said member 41; said rod 43 having a tapered end adapted to pass between the inner ends of the pins 42 in cam fashion, to exert a radially acting force upon the segments 11 and 12 through the intermediate blocks 48 and 49 against which the tapered ends of the pins 42 bear, said blocks being in turn received in recesses formed in the shoes 11 and 12, as shown.

It will be seen that the cross-section of the reduced portion 41 of the transmission member includes two parallel sides 51 and 52 having plane surfaces, said sides being joined by two cam-surfaced sides 53 and 54 whose curvature is such as to increase the radially exerted pressure, and hence the torque-transmitting capacity, of the engine-engaging shoes 11 and 12 in response to rotation of the motor-driven transmission member 27 (and its reduced end portion 41) in the direction of the arrows shown in Figs. 3 and 4; the said radially acting pressure being caused by the cam action of the surfaces 53 and 54 against the shoes 11 and 12, respectively, and being subsequently relaxed only by, and in the event of, a superior turning effort or overrunning of the engine member 7 with respect to the said shoes 11 and 12. When such an overrunning occurs the shoes 11 and 12 are first advanced angularly beyond the zones of greatest cam pressure thereupon (the said zones being indicated diagrammatically at A and B in Fig. 4), after which action the toroidal spring 13 becomes effective to return the shoes 11 and 12 to their normal (disengaged) positions as indicated in Figs. 1 and 3.

The means whereby the control of the longitudinal shifting of the rod 43 is synchronized with the initial rotation of the transmission member 27 (and hence with the camming action of the reduced portion 41 thereof) is shown as involving an electromagnetic device including a winding 61 energizable from a suitable source of current 62 adapted to supply current to both the solenoid winding 61 and the motor windings in response to closure of the manually controlled switch 64 and the electromagnetically controlled switch 66, the latter being normally held out of engagement with the contacts 67 and 68 by reason of the action of the coiled compression spring 69 upon collar 71 of the rod 43. Rod 43 has a magnetic portion 72, also a portion 73 of non-conducting material, the latter including a collar 74 bearing against the switch element 66 to hold it normally in the position indicated in Fig. 1. From the contact element 68 there extends a conductor 77 leading to the terminal element 78 to which is attached one side of the motor windings, the opposite side thereof being grounded (by any suitable connection, not shown) for completion of the return circuit to the battery.

With the arrangement described it will be apparent that closure of the switch 64 will result in energization of the winding 61 and hence a magnetic influence upon the portion 72 of rod 43, sufficient to cause the said rod 43 to move to the right against the yielding opposition of the spring 69. The same action causes a movement of the switch element 66 into bridging relationship with the contacts 67 and 68, the construction shown being such that the rod 43 may "follow through" to complete the radial shifting of the pins 42, even though further forward movement of the switch 66 is prevented by reason of its abutment against the contacts 67 and 68 with which it cooperates electrically, and against which it continues to be urged as long as the solenoid winding 61 remains energized, due to the action of compression spring 81 whose outer end abuts the head 82 of the rod 43 and whose inner end bears upon the switch member 66; it being understood that the latter is loosely carried on the rod 43 whereby relative longitudinal movement can occur between the two.

The engagement of the member 66 with the contacts 67 and 68 completes the circuit to the motor windings simultaneously with the completion of the inward shift of the rod 43, whereby rotary effort is applied to the gear train and transmission member 27 to produce the above-described camming action of the surfaces 53 and 54 against the shoes 11 and 12 simultaneously with completion of the radial movement thereof, as induced by the action of the tapered end of the rod 43 upon the pins 42. A driving connection of limited torque transmitting capacity—the amount of which will depend upon the extent of contact area and the materials of which the shoes 11 and 12 are constructed, as well as upon the strength of the opposition offered by spring 13 is thereby established, and initial rotary movement is accordingly imparted to the engine member 5.

Aided by this initial rotary movement, the concurrent commencement of combustion in the engine cylinders serves to produce an acceleration of the engine member 5 beyond the cranking speed of the shoes 11 and 12, whereupon the latter are automatically disengaged as above described. The operator may then re-open the switch 64 to de-energize the electromagnet 61 and the motor, thus permitting spring 69 to become effective upon collar 71 of the rod 43 to return the latter to its normal position (Fig. 2), in which position the pins 42 are likewise free to return, thereby removing all opposition to the performance by the spring 13 of its function of maintaining the shoes 11 and 12 in the withdrawn position with respect to the engine member 7 during the entire running period of the engine.

What I claim is:

1. In an engine starting apparatus, the combination with engine-engaging friction shoes, of means including a rod extending into the apparatus for moving said friction shoes to engine-engaging position, means for driving said friction shoes, said driving means being operative, upon movement of said friction shoes to engine-engaging position, to increase the frictional, torque transmitting pressure exerted by said friction shoes, and means for producing movement of said driving means only when the shift of said friction

shoes to engine engaging position has been completed.

2. In an engine starting apparatus, the combination with an engine-engaging friction shoe, of means including a rod extending into the apparatus for moving said friction shoe to engine-engaging position, means for driving said friction shoe, said driving means including a cam element engaging said friction shoe and operative, upon movement of said friction shoe to engine-engaging position, to increase the frictional, torque transmitting pressure exerted by said friction shoe, and means for producing movement of said cam element only when the shift of said friction shoes to engine engaging position has been completed.

3. In an engine starting apparatus, the combination with a rotatable engine-engaging member, of means including a rod movable along the axis of rotation of said engine-engaging member, for moving said engine-engaging member radially of said axis, to engine-engaging position, and means for driving said engine-engaging member, said driving means including a cam-surfaced element mounted between and rotatable about the same axis as said engine engaging member, and operative, upon movement of said engine-engaging member to engine-engaging position, to rotate to a limited degree in relation to said engine-engaging member and thereby increase the torque transmitting pressure exerted by said engine-engaging member.

4. In an engine starting apparatus, the combination of a rotatable engine-engaging member, of means for moving said engine-engaging member radially of its axis of rotation, to engine-engaging position, means for driving said engine-engaging member, said driving means being operative, upon movement of said engine-engaging member to engine-engaging position, to increase the torque transmitting pressure exerted by said engine-engaging member, and means for producing movement of said driving means only when the shift of said engine engaging member to engine engaging position has been completed.

5. In an engine starting apparatus, the combination with engine engaging friction shoes, of rotatable cam-surfaced means for driving said shoes, and means including pins shiftable radially of, and slidable loosely within, said cam-surfaced means, for initially moving said friction shoes to engine engaging position.

6. In an engine starting apparatus, the combination with engine engaging friction shoes, of rotatable cam-surfaced means for driving said shoes, and means including pins shiftable radially of, and slidable loosely within, said cam-surfaced means, for initially moving said friction shoes to engine engaging position, said cam-surfaced means acting, upon movement of said friction shoes to engine engaging position, to increase the torque transmitting pressure exerted by said friction shoes.

7. In an engine starting apparatus, the combination with engine engaging friction shoes, of means including a rod and radially movable blocks actuated by said rod (said blocks being engageable with said friction shoes) for moving said friction shoes to engine engaging position, and means occupying space between said radially movable blocks to drive said friction shoes, said driving means being operative, upon movement of said radially movable blocks, to increase the frictional torque transmitting pressure exerted by said friction shoes.

SAMUEL GILBERT.